FEAL

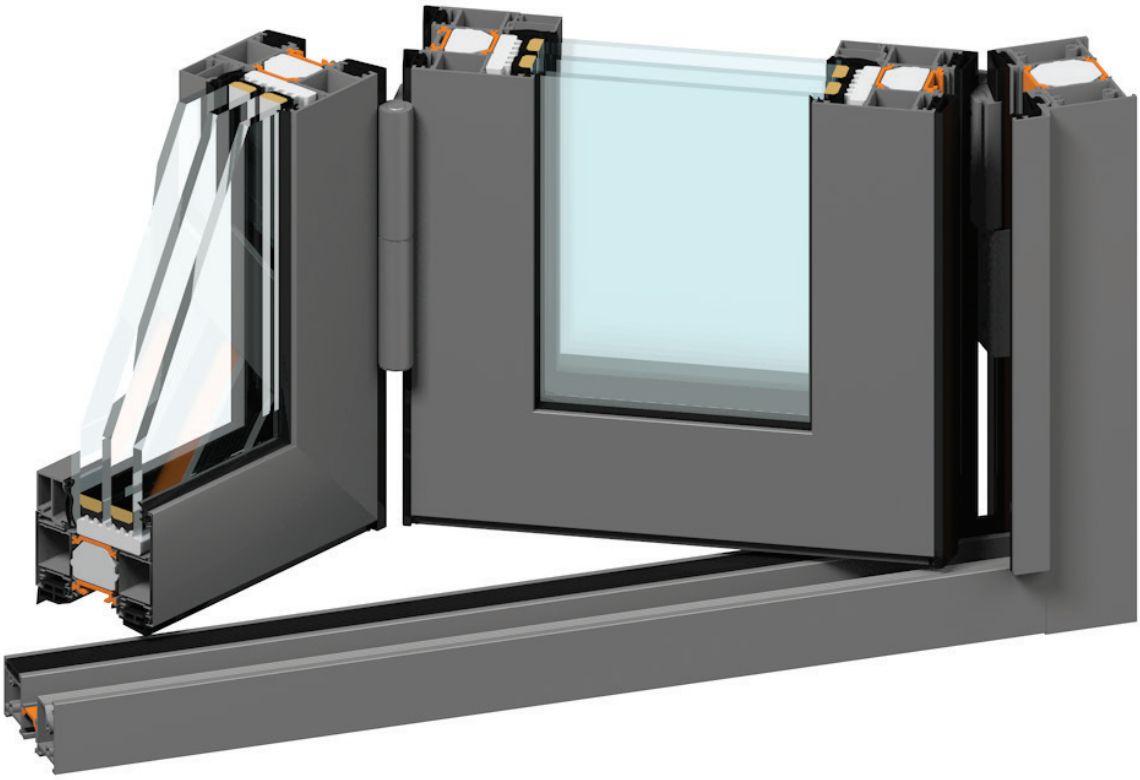

TERMO **80 HD**

HARMONIKA VRATA

FOLDING DOORS

SADRŽAJ CONTENT

01	ZNAČAJKE SISTEMA SYSTEM CHARACTERISTICS	304.01.000-007
02	ISPITIVANJA I CERTIFIKATI TESTING AND CERTIFICATES	304.02.000-007
03	PROFILI PROFILES	304.03.000-007
04	VEZNI ELEMENTI CONNECTION ELEMENTS	304.04.000-003
05	PVC ELEMENTI PVC ELEMENTS	304.05.000-003
06	MEHANIZMI MECHANISMS	304.06.000-005
07	BRTVE GASKETS	304.07.000-005
08	DODACI ACCESSORIES	304.08.000-003
09	PRIKAZ STAKLJENJA GLAZING	304.09.000-003
10	PRESJECI CROSS SECTION	304.10.000-057
11	OBRADA I MONTAŽA PROCESSING AND MONTAGE	304.11.000-031
12	REZNE LISTE CUTTING LISTS	304.12.000-057

Značajke sistema
System characteristics

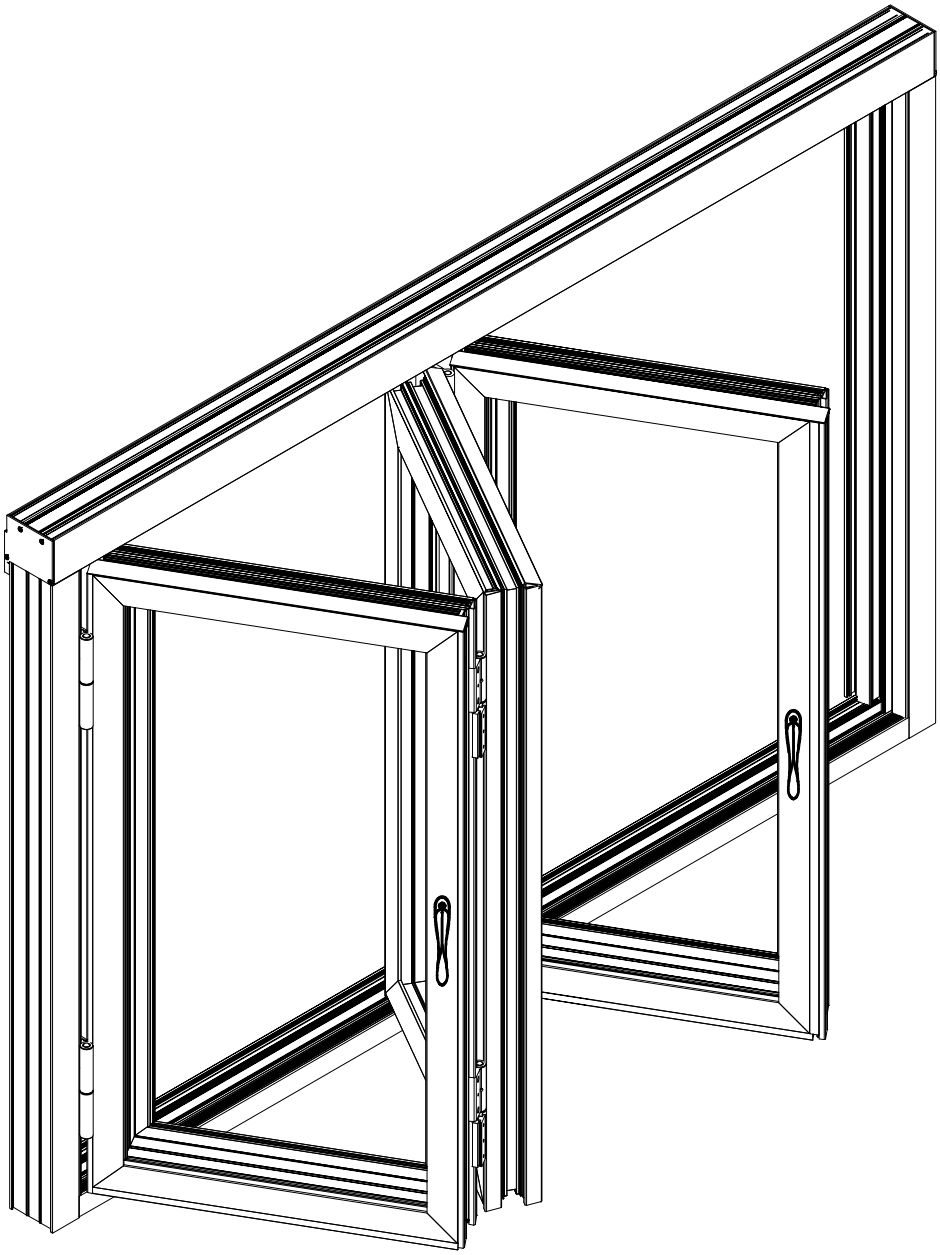

OPIS SISTEMA TERMO 80HD
TERMO 80HD SYSTEM DESCRIPTION

Sistem Termo 80HD koristi se za izradu vrata - harmo otvaranje, prema unutra i prema vani.
Nošenje krila je izvedeno preko mehanizma u gornjoj vodilici a u donjoj vodilici je mehanizam pratilice.
Profili su izvedeni s prekinutim toplinskim mostom osnovne ugradbene dubine rama i krila 80 mm.
Prekid toplinskog mosta postiže se poliamidnim trakama širine 30 mm i trakama od ekstrudiranog polistirena (xps-a) koji se ugrađuje u komore profila.
Brtvljenje između krila i rama izvedeno je EPDM brtvama.
Staklo je u krilu učvršćeno unutarnjim letvicama te zabrtvljeno EPDM brtvama s obje strane.
System Termo 80HD is used to production for folding doors, inside opening and outside opening.
The bearing of the sash is performed through the mechanism in the upper guide and in the lower guide rail is the track mechanism.
Profiles include thermal break with basic embedded frame and sash depth of 80 mm.
Thermal break is achieved by using polyamide tapes 30 mm and extruded polystyren tapes (XPS) are embedded in profile chambers to improve thermal characteristics (thermal conductivity reduction).
Sash and frame sealing is done by using EPDM gaskets..
Glass inside the sash is secured by using interior slats and sealed by using EPDM gaskets on both side.

Karakteristike sistema:
-materijal material..... EN AW-6060
-masa krila sash mass.....90 kg
-debljina stakla glass thickness..... 24-68 mm
-materijal za brtvljenje (EPDM) sealing material (EPDM)..... DIN 7863
-zrakopropusnost air permeability..... EN 12207 (klasa -)
-vodonepropusnost water tightness..... EN 12208 (klasa -)
-otpornost na udar vjetra wind resistance..... EN 12210 (klasa -)
-proračun Ud koeficijenta Ud coefficient calculation.....DIN EN ISO 10077-2
-površinska obrada surface processing.....DIN 17611
-kontrola kvalitete quality control.....DIN EN ISO 9001

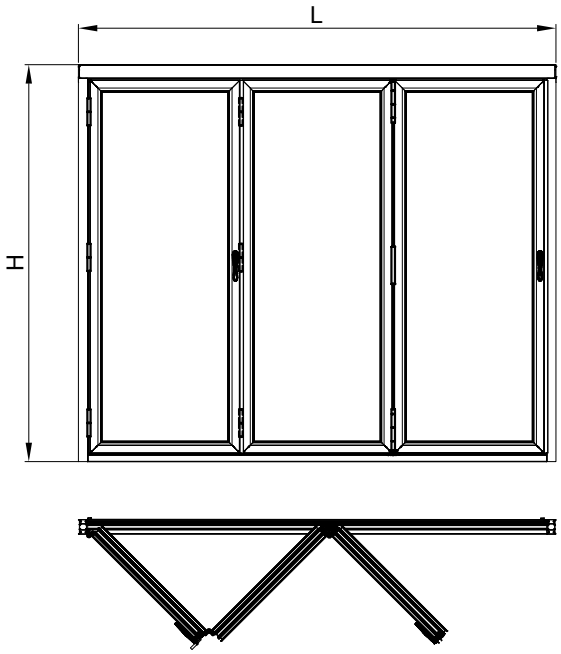

OTVARANJE UNUTRA
INSIDE OPENING

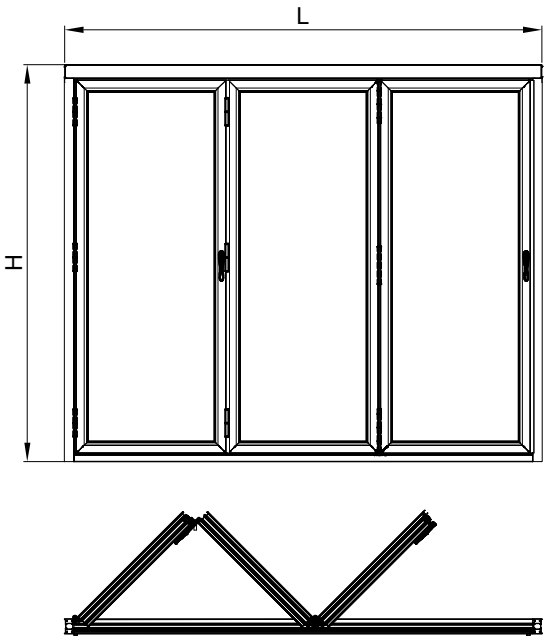

OTVARANJE VANI
OUTSIDE OPENING

TIPOLOGIJA OTVARANJA
TYPOLOGY OF OPENINGS

Otvaranje unutra
Inside opening

3+0

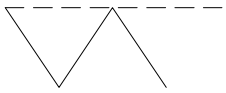

3+1

5+0

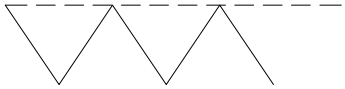

5+1

3+3

5+3

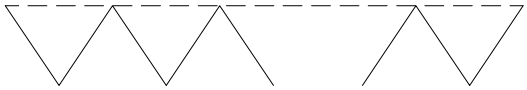

5+5

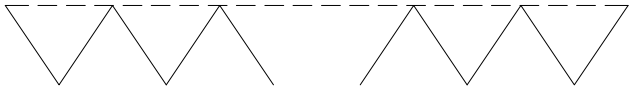

Otvaranje vani
Outside opening

3+0

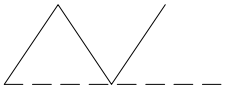

3+1

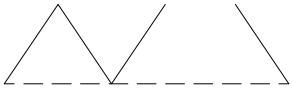

5+0

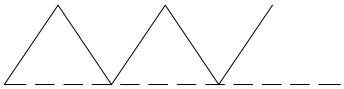

5+1

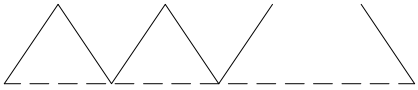

3+3

5+3

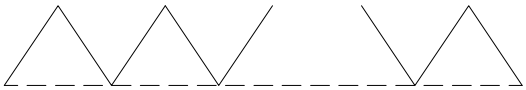

5+5

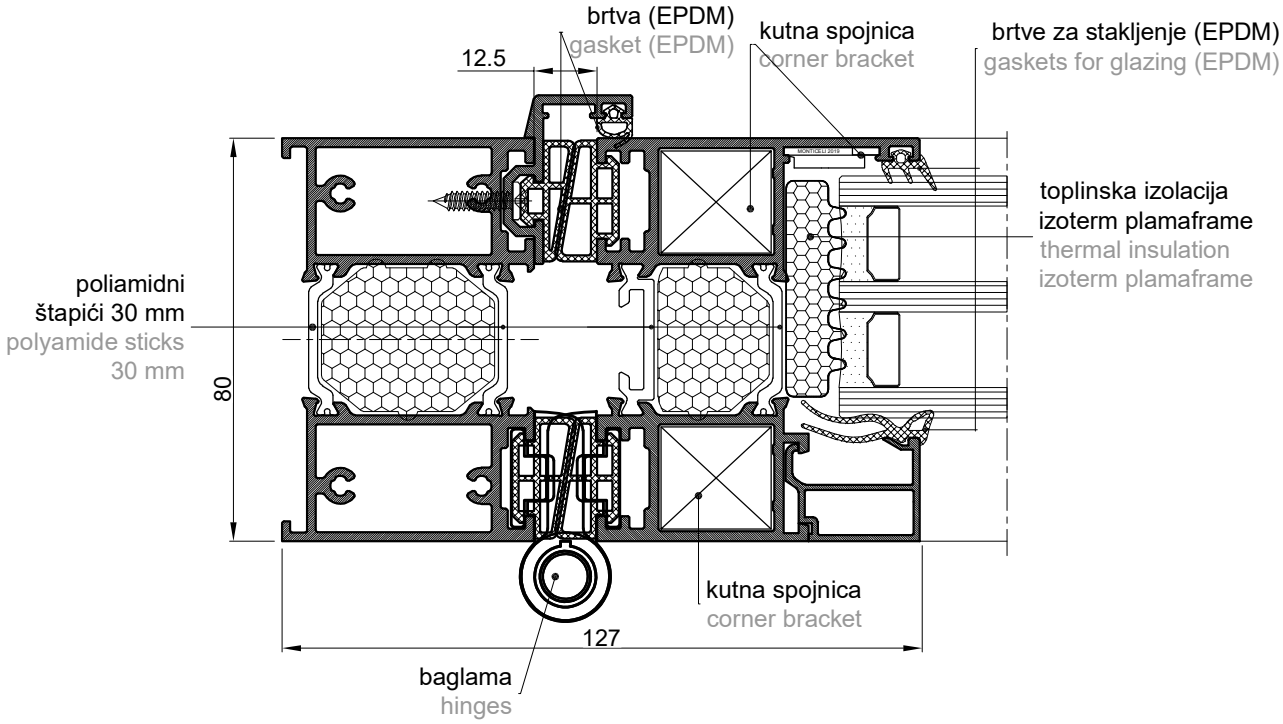
brtva (EPDM)
gasket (EPDM)
12.5
kutna spojnica
corner bracket
brtve za stakljenje (EPDM)
gaskets for glazing (EPDM)
toplinska izolacija
izoterm plamaframe
thermal insulation
izoterm plamaframe
poliamidni
štapići 30 mm
polyamide sticks
30 mm
80
kutna spojnica
corner bracket
127
baglama
hinges

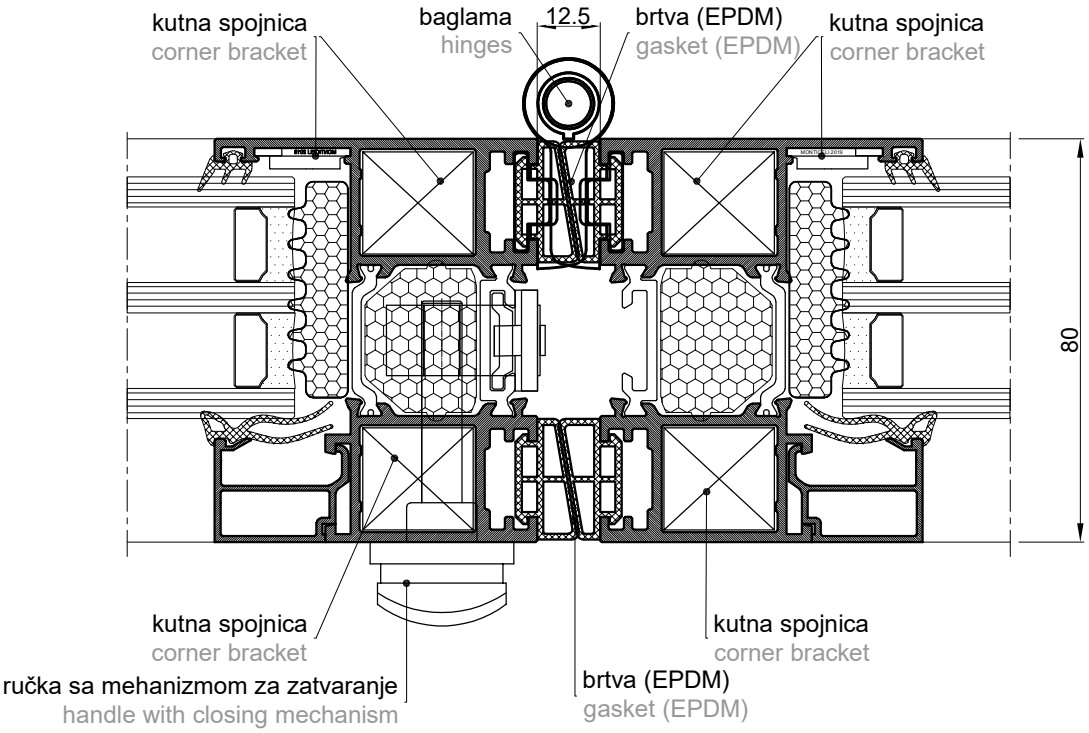
kutna spojnica
corner bracket
baglama
hinges
12.5
brtva (EPDM)
gasket (EPDM)
kutna spojnica
corner bracket
80
kutna spojnica
corner bracket
ručka sa mehanizmom za zatvaranje
handle with closing mechanism
brtva (EPDM)
gasket (EPDM)
kutna spojnica
corner bracket

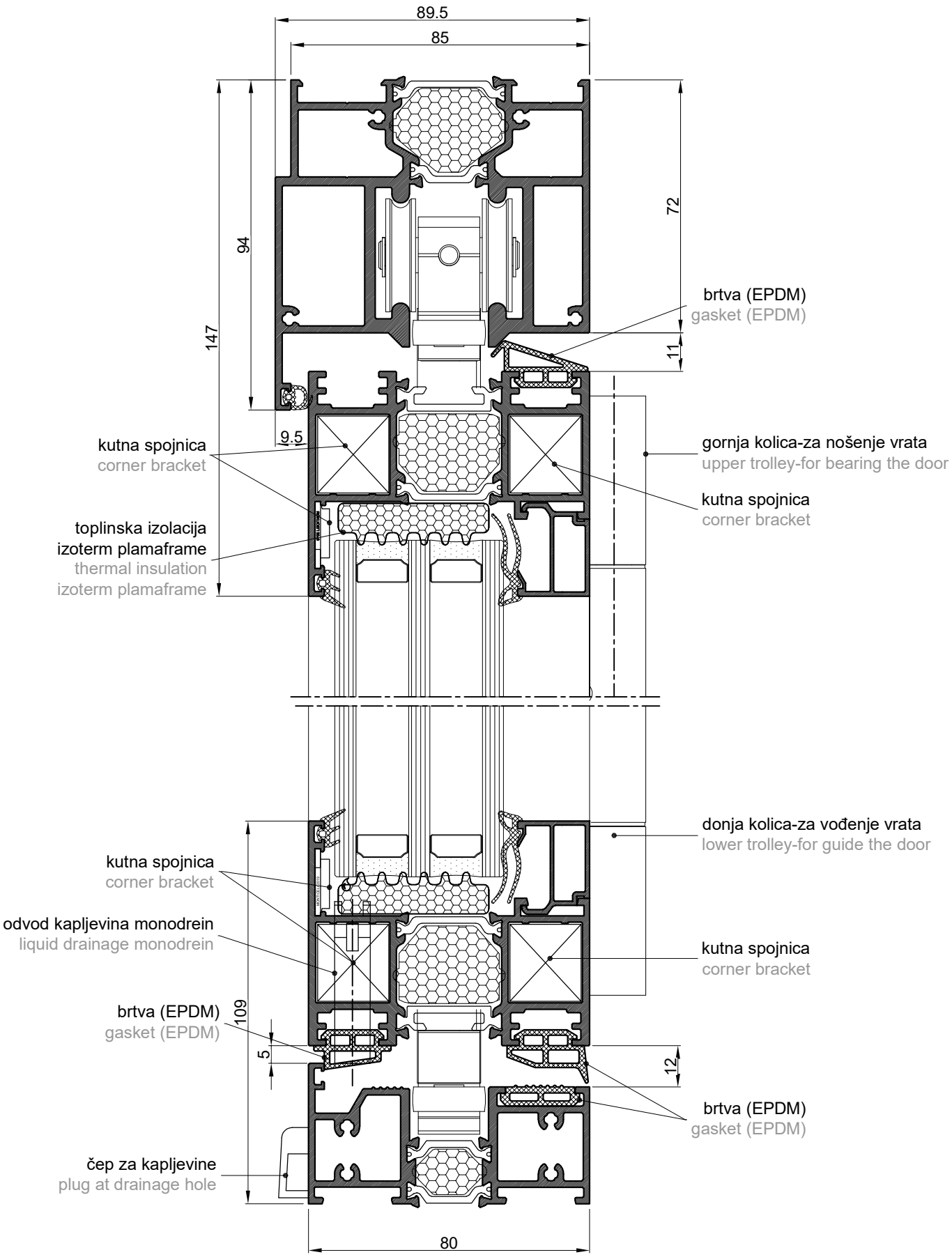
89.5
85
94
147
72
11
9.5
brtva (EPDM)
gasket (EPDM)
kutna spojnica
corner bracket
gornja kolica-za nošenje vrata
upper trolley-for bearing the door
kutna spojnica
corner bracket
toplinska izolacija
izoterm plamaframe
thermal insulation
izoterm plamaframe
donja kolica-za vođenje vrata
lower trolley-for guide the door
kutna spojnica
corner bracket
odvod kapljevina monodrein
liquid drainage monodrein
kutna spojnica
corner bracket
brtva (EPDM)
gasket (EPDM)
109
5
12
brtva (EPDM)
gasket (EPDM)
čep za kapljevine
plug at drainage hole
80

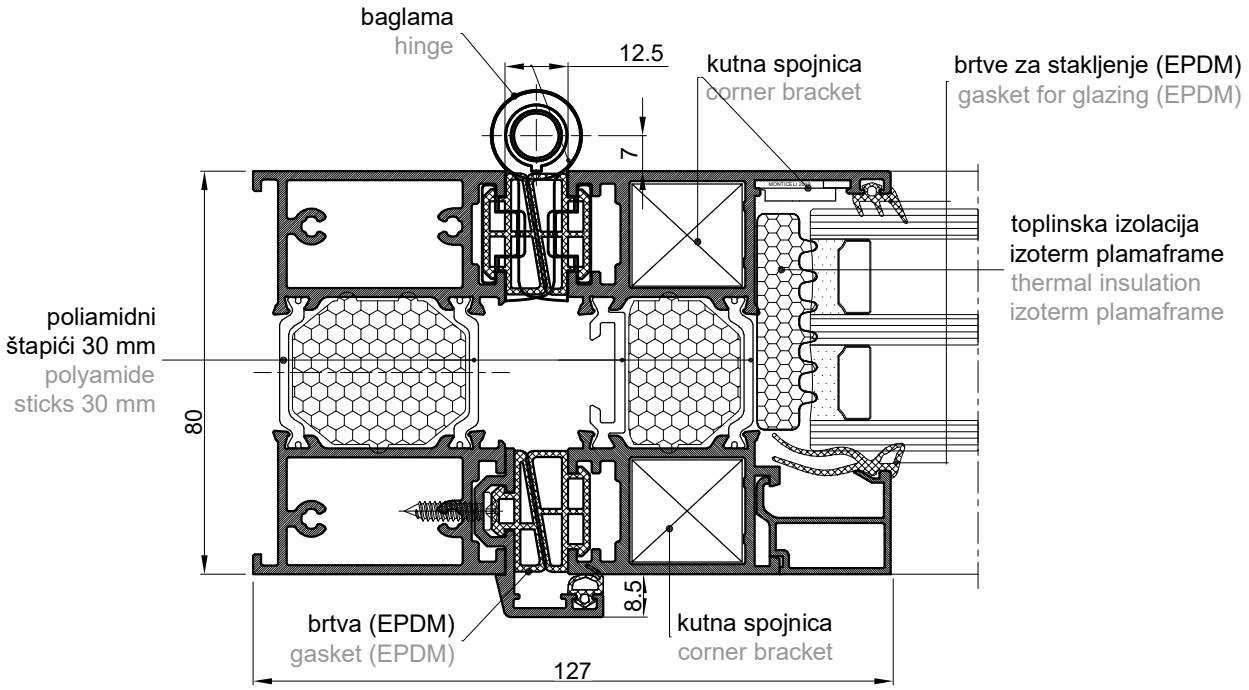
baglama
hinge
12.5
kutna spojnica
corner bracket
brtve za stakljenje (EPDM)
gasket for glazing (EPDM)
7
toplinska izolacija
izoterm plamaframe
thermal insulation
izoterm plamaframe
poliamidni
štapići 30 mm
polyamide
sticks 30 mm
80
8.5
brtva (EPDM)
gasket (EPDM)
kutna spojnica
corner bracket
127

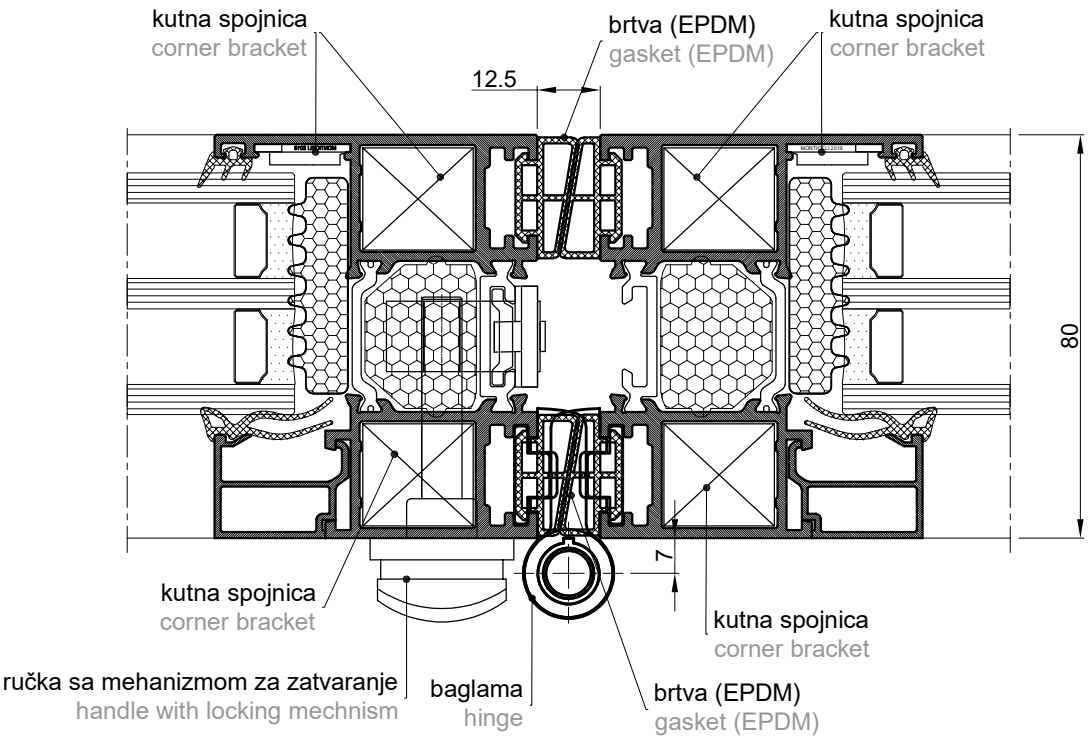
kutna spojnica
corner bracket
brtva (EPDM)
gasket (EPDM)
kutna spojnica
corner bracket
12.5
80
7
kutna spojnica
corner bracket
kutna spojnica
corner bracket
ručka sa mehanizmom za zatvaranje
handle with locking mechnism
baglama
hinge
brtva (EPDM)
gasket (EPDM)

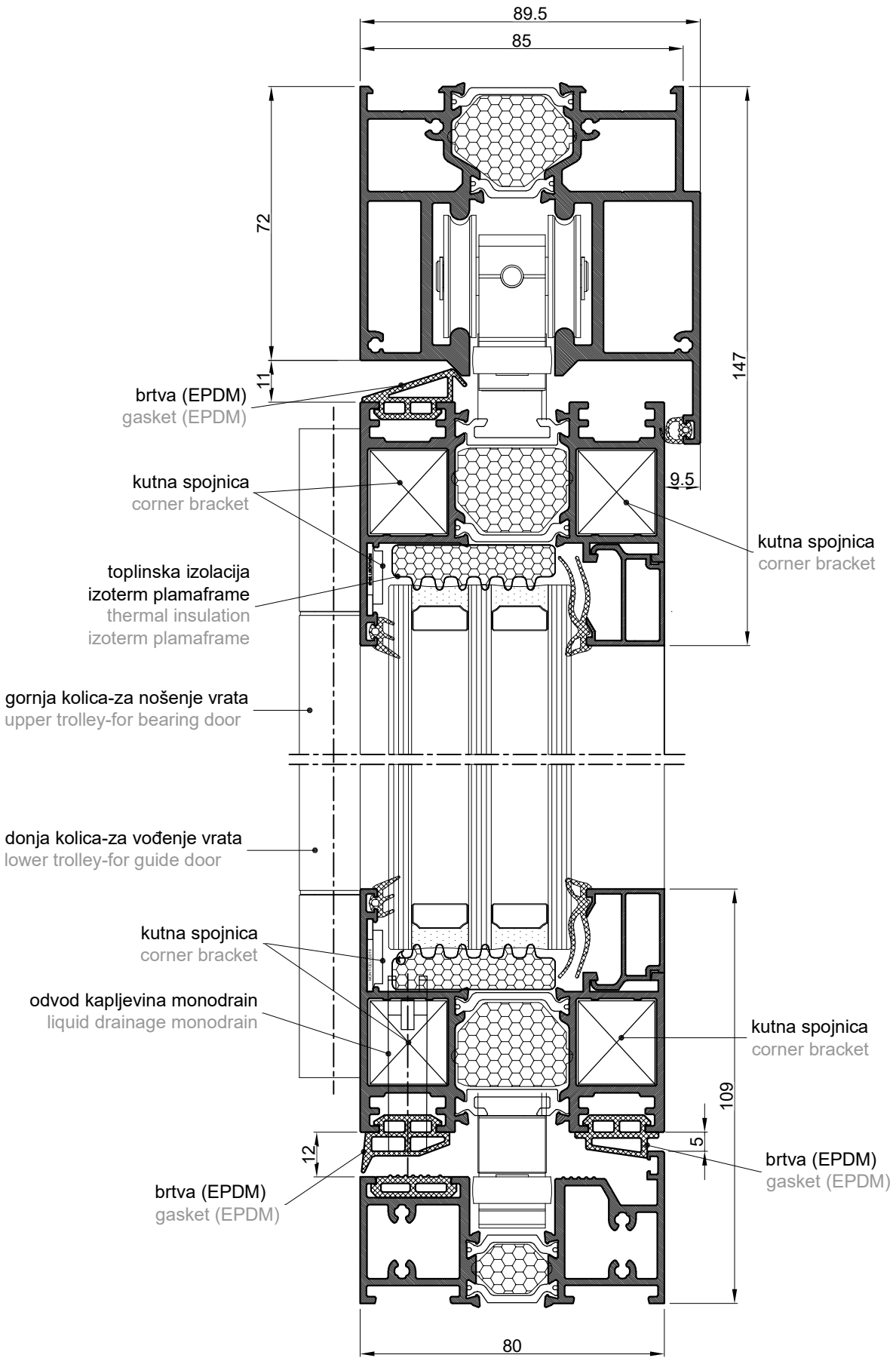
89.5
85
72
11
147
9.5
brtva (EPDM)
gasket (EPDM)
kutna spojnica
corner bracket
kutna spojnica
corner bracket
toplinska izolacija
izoterm plamaframe
thermal insulation
izoterm plamaframe
gornja kolica-za nošenje vrata
upper trolley-for bearing door
donja kolica-za vođenje vrata
lower trolley-for guide door
kutna spojnica
corner bracket
odvod kapljevina monodrain
liquid drainage monodrain
kutna spojnica
corner bracket
109
12
5
brtva (EPDM)
gasket (EPDM)
brtva (EPDM)
gasket (EPDM)
80

Ispitivanja i certifikati
Testing and certificates

		Uf1 W/m2K	Uf2 W/m2K	Uf3 W/m2K	Uf4 W/m2K	Uf5 W/m2K	Uf6 W/m2K	Uf7 W/m2K	Ug W/m2K	Uw W/m2K
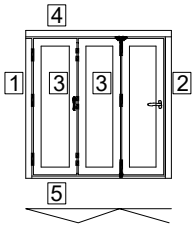	Termo 80HD tip 3+0, otvaranje unutra i vani 3163x2528	2,0	2,1	1,8	2,8	2,5			0,7 1,1	≥1,2 ≥1,5
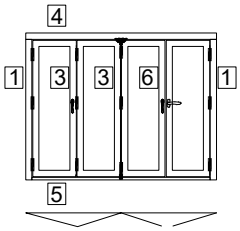	Termo 80HD tip 3+1, otvaranje unutra i vani 4176x2528	2,0		1,8	2,8	2,5	2,0		0,7 1,1	≥1,2 ≥1,5
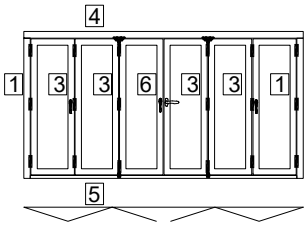	Termo 80HD tip 3+3, otvaranje unutra i vani 6201x2528	2,0		1,8	2,8	2,5	2,0		0,7 1,1	≥1,2 ≥1,5

Napomena:

Opterećenje vjetrom
Wind load

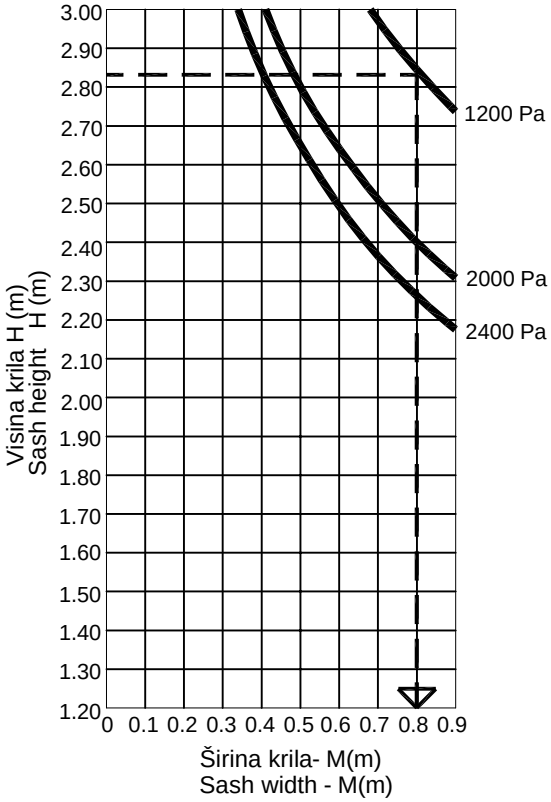

Maksimalne dimenzije i težine krila
Maximal sash dimensions and weight

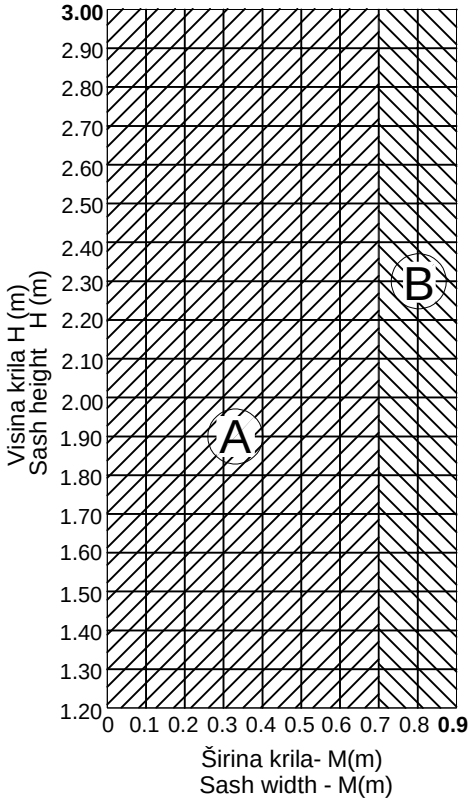

	A	B
Maksimalna težina krila- T(kg) Maximal sash weigth - T(kg)	90	70

Primjer: Visina krila - H = 2.82 m
Example: Sash height - H
Opt. vjetrom = 1200 Pa
Wind load

Rezultat: Moguća širina krila = 0.8 m
Result: Possible sash width

Tlak (Pa) Pressure (Pa)	Brzina (m/s) Speed (m/s)	Brzina (km/h) Speed (km/h)
200	18	64
300	22	78
500	28	100
800	35	126
1200	43	155
2000	56	200
2400	61	220

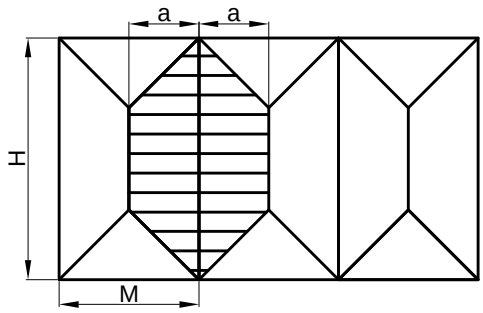

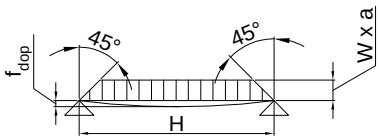

Trapeziodno opterećenje
Trapeziod load

$$I_x = 2 \times \frac{W \times M \times H^4}{1920 \times E \times f_{dop}} \times \left(25 - 40\frac{a^2}{H^2} + 16\frac{a^2}{H^2}\right)$$

I_x	(cm^4)	= Moment inercije Moment of inertia
W	(kN/m^2)	= Opterećenje vjetrom Wind load
H	(m)	= Visina krila Sash height
E	(kN/mm^2)	= Modul elastičnosti Elasticity modulus
f_{dop}	(mm)	= dopušteni progib Allowed deformation
a	(m)	= širina opterećenja Load width =L/a
M	(m)	= širina krila Sash width

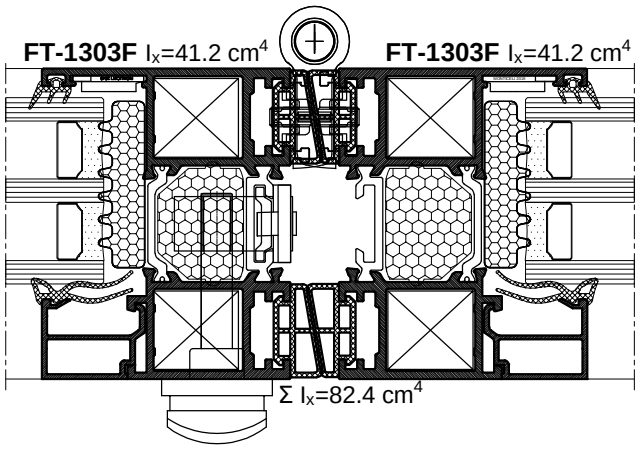

PERFECTION IN ALUMINIUM
www.feal.ba

ATEST PROIZVOĐAČA SISTEMA
CERTIFICATE OF THE SYSTEM MANUFACTURER

Naručitelj:

Proizvođač	FEAL
Broj ispitivanja	29102018-001
Ispitao	Zoran Vrljić; Ante Golemac
Datum proizvodnje	05.10.2018

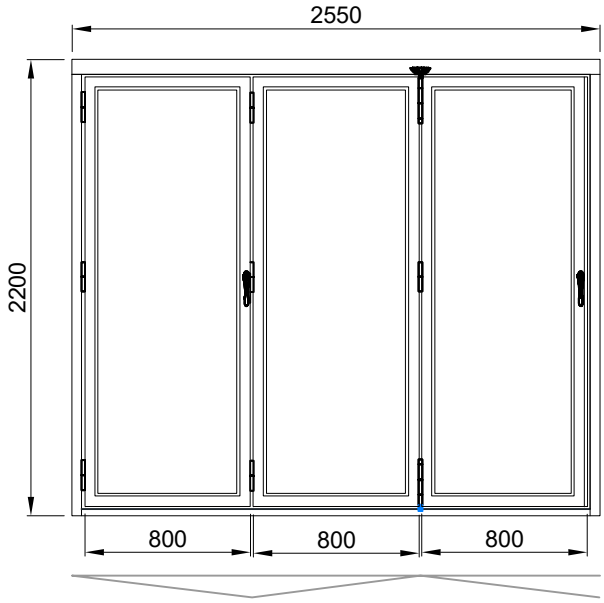

Opis ispitnih uzoraka:

Vanjski izmjer (LxH)	2,550 m	2,200 m	Prečka
Izmjer prozorskog krila 1 (LxH)	0,800 m	2,072 m	Ne
Površina ispitnog uzorka	5,610 m	Dužina spoja	

Vrsta ispitnog uzorka:	TERMO 80 HD

Opis profila:

Okomica rama	FT-1302F	Proizvođač okova/tip:	Feal
Vodor.rama-gornja	FT-1301F	Staklena ispuna-krilo	izo (6+15+6)
Vodor.rama-donja	FT-1300F	Staklo lajsna	Z40-670
Krilo	FT-1303F	Dubina rama i krila	80 mm

Napomene:

Uzorak harmonika vrata Termo 80 HD dimenzija 2550x2200 mm se sastoji od:
1.tip otvaranja 3+0; otvaranje unutra
2.dimenzije krila 800x2072 mm

Otpornost na opterećenje vjetrom prema EN12210	C2/B2
Vodonepropusnost prema .....EN 12154	4A
Zrakopropusnost prema..... EN 12207	Razred 2
Sile otvaranja i zatvaranja .....EN 13115	-

Datum: 29.10.2018.

Ispitao: Ante Golemac, Zoran Vrljić

Potpis odgovornih osoba za ispitivanje:

Profili
Profiles

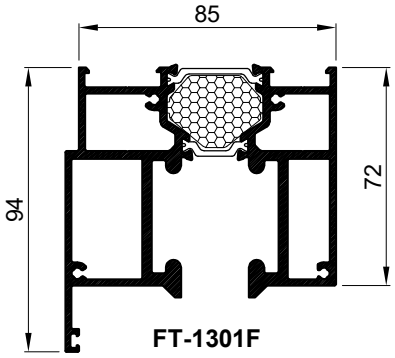

FT-1301F
kg/m 3.784

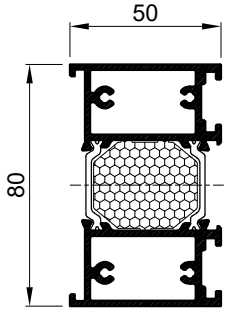

FT-1302F
kg/m 2.079

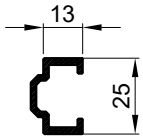

F-1562
kg/m 0.307

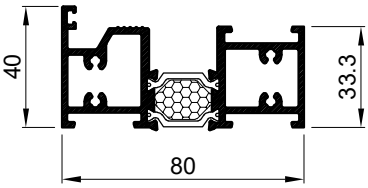

FT-1300F
kg/m 1.828

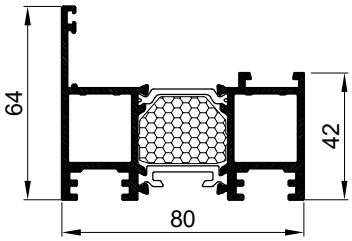

FT-1303F
kg/m 1.960

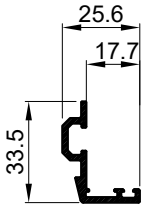

F-1561
kg/m 0.351

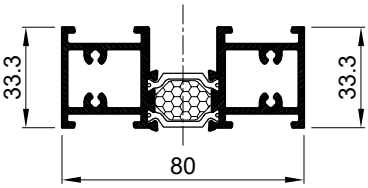

FT-1304F
kg/m 1.771

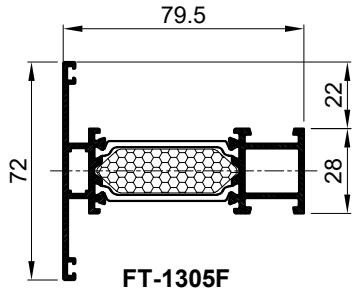

FT-1305F
kg/m 1.421

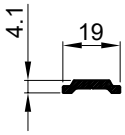

F-1584
kg/m 0.131

Z40-657
kg/m 0.186

Z40-660
kg/m 0.179

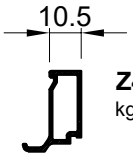

Z40-664
kg/m 0.243

Z40-666
kg/m 0.289

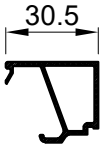

Z40-668
kg/m 0.326

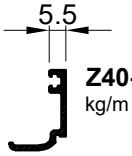

Z40-656
kg/m 0.215

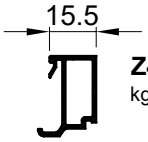

Z40-665
kg/m 0.272

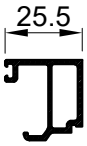

Z40-667
kg/m 0.358

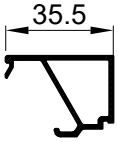

Z40-669
kg/m 0.347

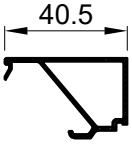

Z40-670
kg/m 0.373

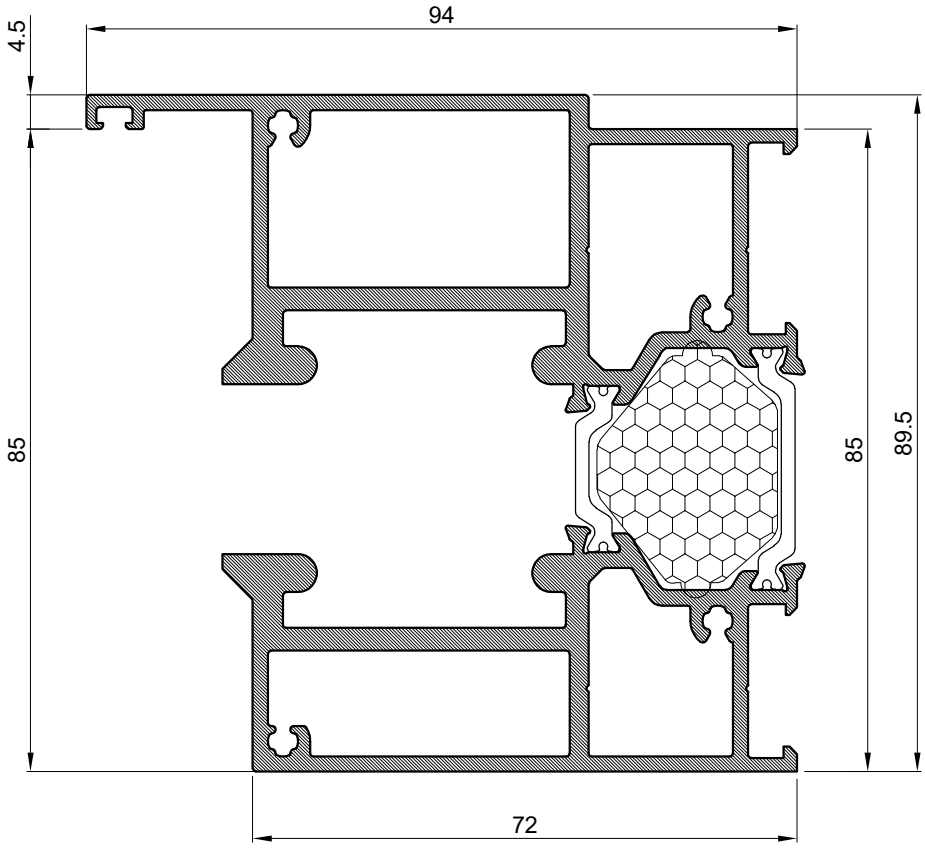

Profil okvira rama Profile frame		
Art.-Br. Art.-No.	**FT-1301F**	
Težina Weight	kg/m	3.784
Opseg Perimeter	mm	583
Momenti inercije Moments of inertia	Ix (cm4)	89.13
	Iy (cm4)	78.89
	Wx (cm3)	26.43
	Wy (cm3)	14.77
L	mm	6500

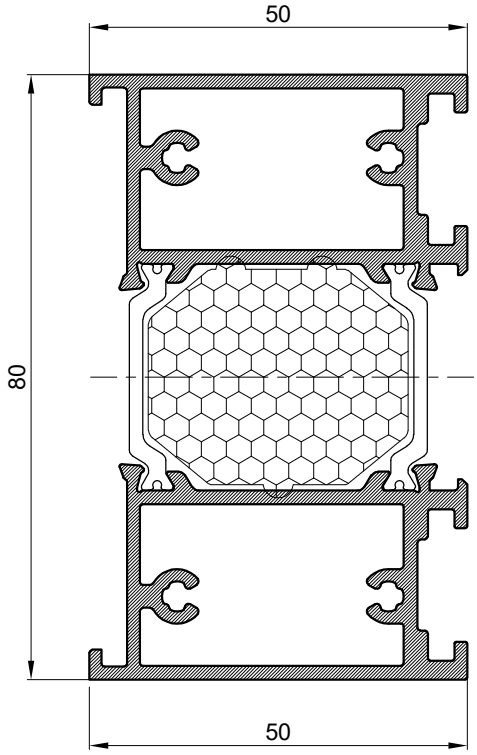

Profil okvira rama -bočni Profile frame - mullion		
Art.-Br. Art.-No.	**FT-1302F**	
Težina Weight	kg/m	2.079
Opseg Perimeter	mm	332
Momenti inercije Moments of inertia	Ix (cm4)	42.82
	Iy (cm4)	18.14
	Wx (cm3)	14.56
	Wy (cm3)	6.79
L	mm	6500

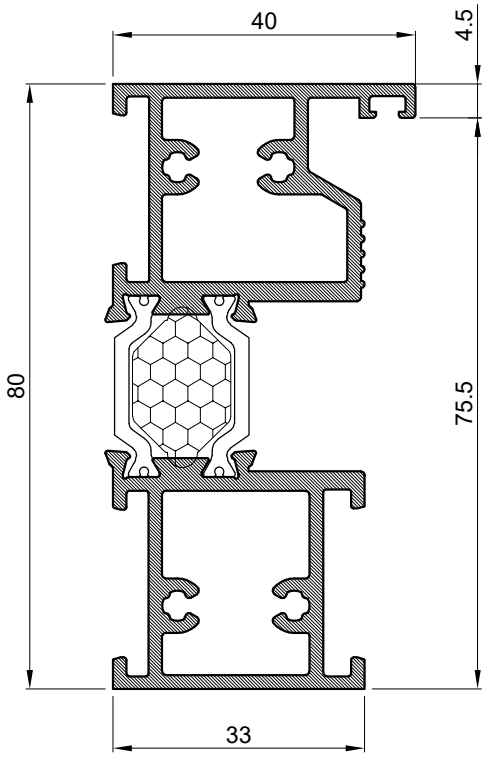

Profil okvira rama-prag Profile frame-threshold		
Art.-Br. Art.-No.	**FT-1300F**	
Težina Weight	kg/m	1.828
Opseg Perimeter	mm	374
Momenti inercije Moments of inertia	Ix (cm4)	34.01
	Iy (cm4)	7.09
	Wx (cm3)	11.02
	Wy (cm3)	3.05
L	mm	6500

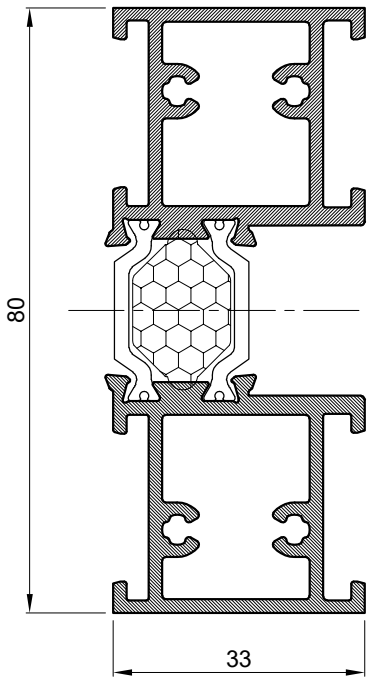

Profil okvira rama -prag Profile frame-threshold		
Art.-Br. Art.-No.	**FT-1304F**	
Težina Weight	kg/m	1.771
Opseg Perimeter	mm	371
Momenti inercije Moments of inertia	Ix (cm4)	42.73
	Iy (cm4)	6.21
	Wx (cm3)	10.68
	Wy (cm3)	3.05
L	mm	6500

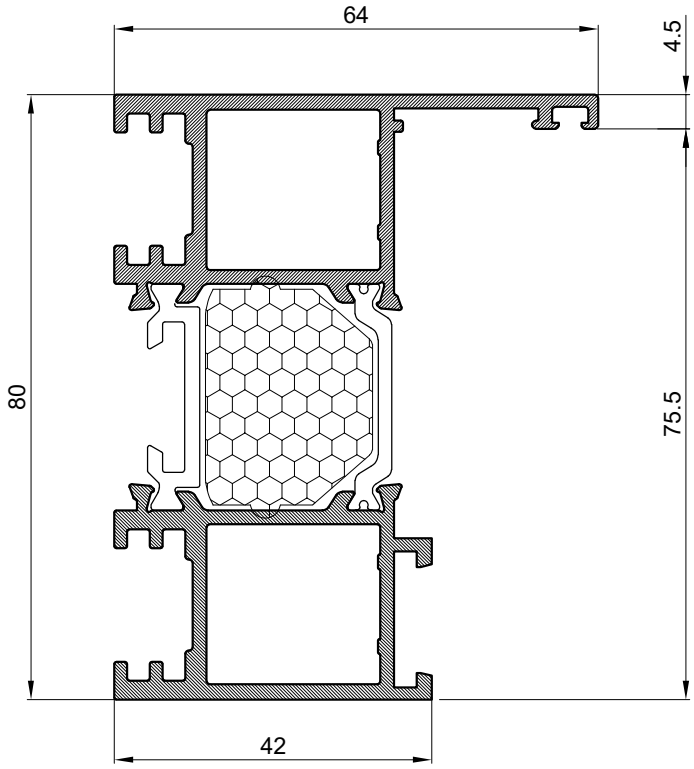

Profil krila Sash profile		
Art.-Br. Art.-No.	**FT-1303F**	
Težina Weight	kg/m	1.960
Opseg Perimeter	mm	438
Momenti inercije Moments of inertia	Ix (cm4)	41.21
	Iy (cm4)	15.62
	Wx (cm3)	13.15
	Wy (cm3)	3.74
L	mm	6500

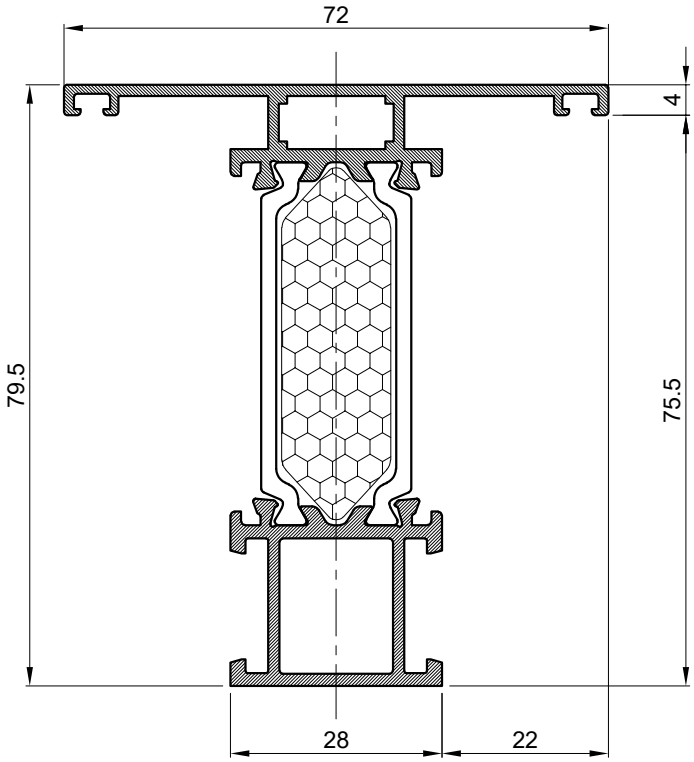

Profil prečke Profile window mullion		
Art.-Br. Art.-No.	**FT-1305F**	
Težina Weight	kg/m	1.421
Opseg Perimeter	mm	410
Momenti inercije Moments of inertia	Ix (cm4)	41.21
	Iy (cm4)	15.62
	Wx (cm3)	13.15
	Wy (cm3)	3.74
L	mm	6500

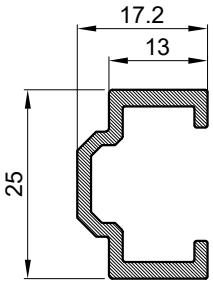

Dodatni profil Add profile		
Art.-Br. Art.-No.	**F-1562**	
Težina Weight	kg/m	0.307
Opseg Perimeter	mm	119
L	mm	6500

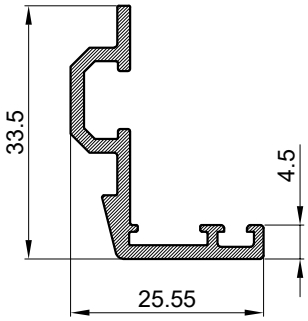

Dodatni profil Add profile		
Art.-Br. Art.-No.	**F-1561**	
Težina Weight	kg/m	0.351
Opseg Perimeter	mm	149
L	mm	6500

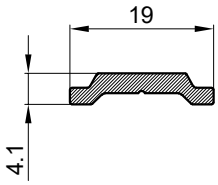

Klizač Slider		
Art.-Br. Art.-No.	**F-1584**	
Težina Weight	kg/m	0.131
Opseg Perimeter	mm	45
L	mm	6500

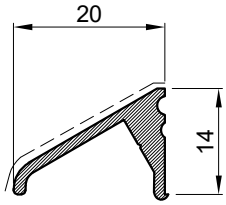

Okapnica Drip rail		
Art.-Br. Art.-No.	**Z40-657**	
Težina Weight	kg/m	0.186
Opseg Perimeter	mm	73
L	mm	6500

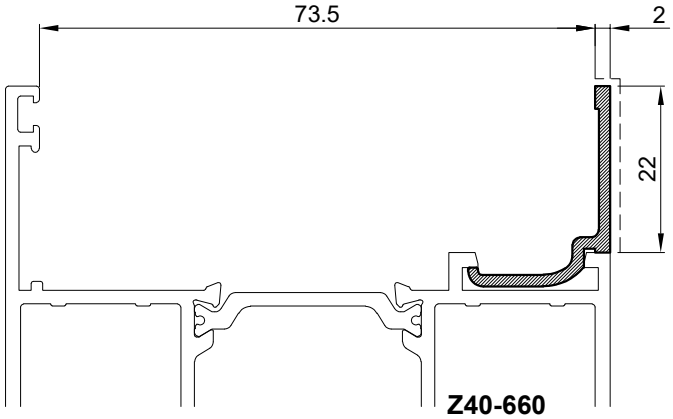

Z40-660
težina: kg/ml 0.179
svj.povr. mm 24
weight: kg/ml 0.179
visible surface: mm 24

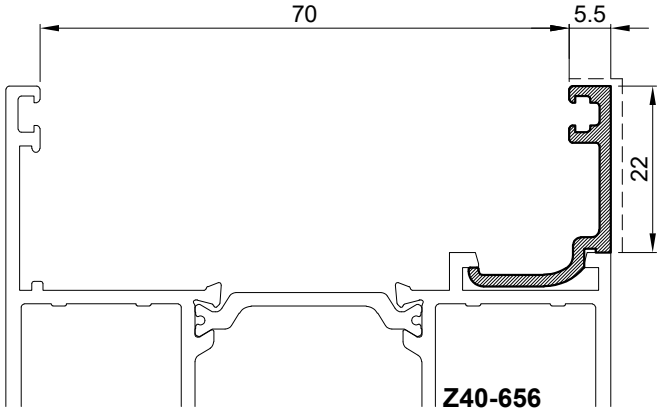

Z40-656
težina: kg/ml 0.215
svj.povr. mm 27
weight: kg/ml 0.215
visible surface: mm 27

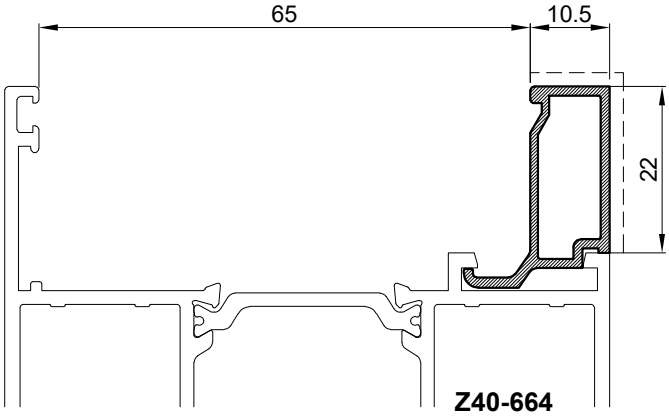

Z40-664
težina: kg/ml 0.243
svj.povr. mm 32
weight: kg/ml 0.243
visible surface: mm 32

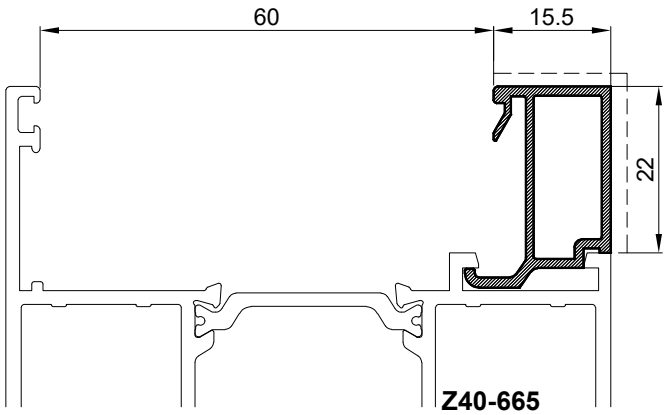

Z40-665
težina: kg/ml 0.272
svj.povr. mm 37
weight: kg/ml 0.272
visible surface: mm 37

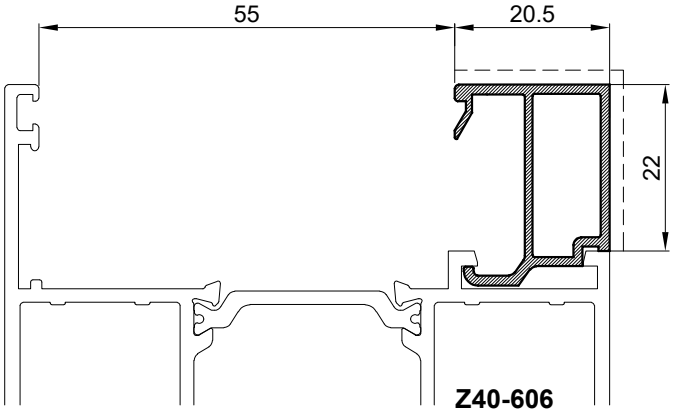

Z40-606
težina: kg/ml 0.289
svj.povr. mm 42
weight: kg/ml 0.289
visible surface: mm 42

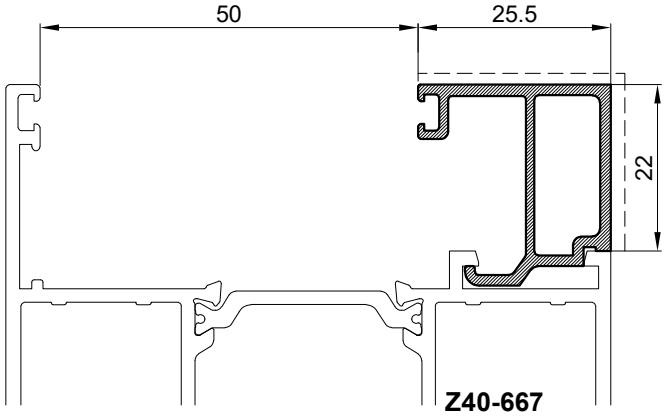

Z40-667
težina: kg/ml 0.358
svj.povr. mm 47
weight: kg/ml 0.358
visible surface: mm 47

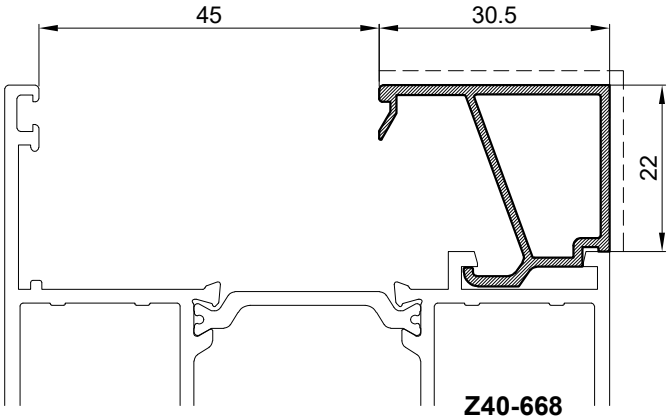

Z40-668
težina: kg/ml 0.326
svj.povr. mm 52
weight: kg/ml 0.326
visible surface: mm 52

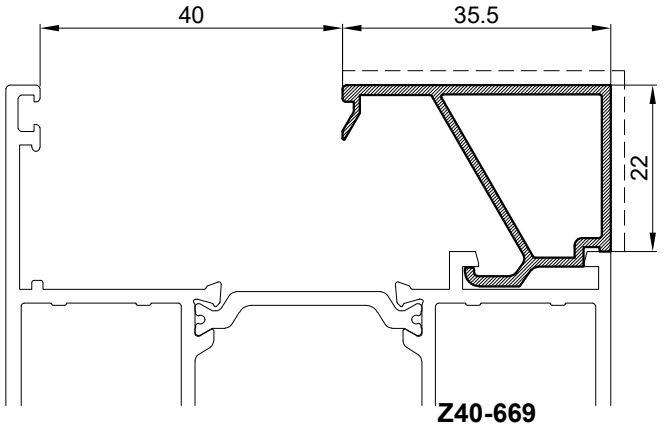

Z40-669
težina: kg/ml 0.347
svj.povr. mm 57
weight: kg/ml 0.347
visible surface: mm 57

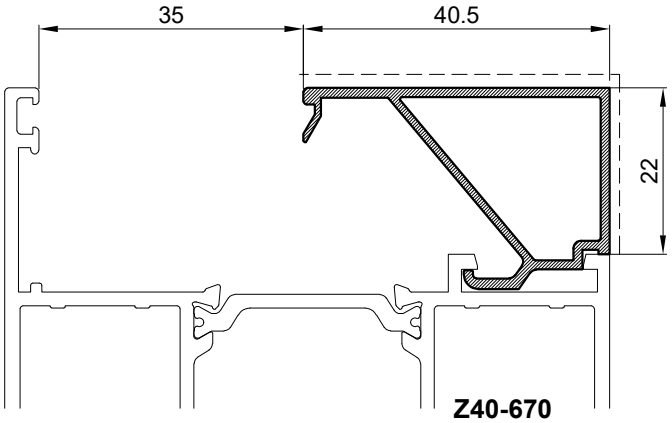

Z40-670
težina: kg/ml 0.373
svj.povr. mm 63
weight: kg/ml 0.373
visible surface: mm 63

Vezni elementi
Connection elements

Oznaka Code	Izgled-presjek View- cross section	Opis Description	Materijal Material	Napomena Remark
710.413	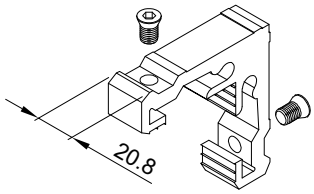	- Kutna spojnica za komoru 21.2x22.7 - Koristi se za profil krilaFT-1303 - Corner bracket for chamber 21.2x22.7 - Use for sash profile FT-1303	Al.	
710.422	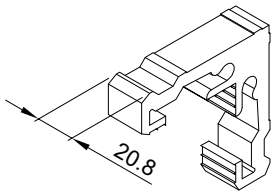	- Kutna spojnica za komoru 21.2x22.7 - Koristi se za profil krilaFT-1303 - Corner bracket for chamber 21.2x22.7 - Use for sash profile FT-1303	Al.	
731.010	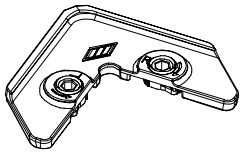	- Kutna spojnica za komoru 19.2x1.6 - Stara oznaka 2019/500 - Corner bracket for chamber 19.2x1.6 - Former code 2019/500	Zamak	
383.001	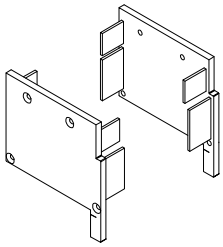	- Maska gornjeg vodoravnog profila rama - Mask of upper horizontal profile frame	Zamak	
383.002	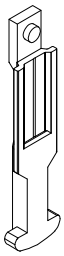	-Zapinjač u krilu profila FT-1303 (Termo 80HD) -Pawl in wing of profile FT-1303 (Termo 80HD)	Zamak	

PVC elementi
PVC elements

Oznaka Code	Izgled-presjek View-cross section	Opis Description	Materijal Material	Napomena Remark
360.009	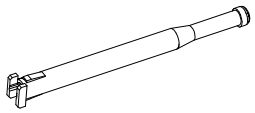	- Sustav odvodnje kapljevina "Monodrain" - System drainage "Monodrain"	Guma	
373.003	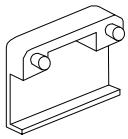	- Maska za drenažni otvor - Stara oznaka: 2328 - Mask for dreinage hole - Former code: 2328	PVC	
363.067	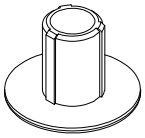	- Umetak kolica - Insert trolley	Tvrda guma Hard rubber	
373.056	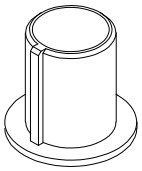	- Umetak za baglamu - Insert for hinge	PVC	
363.069	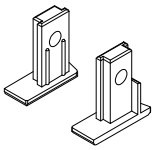	- Umetak za profil F-1561 (lijevi+desni) - Insert for profile F-1561 (left+right)	Tvrda guma Hard rubber	
140.081	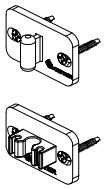	-Graničnik krila -Izvorna oznaka:93638.6 -Proizvođač Master -Sash stopper -Former code:93638.6 -Manufacturer by Master	PVC	

Mehanizmi
Mechanisms

Oznaka Code	Izgled-presjek View-cross section	Opis Description	Materijal Material	
111.024.01 02 03	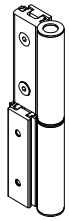	-Baglama -Boje: 01- bijela, 02 - siva, 03 - crna -Hinge -Color: 01- white, 02 - grey, 03 - black		
111.022.01 02 03	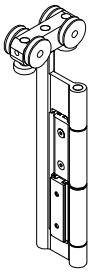	-Mehanizam gornje vodilice -Boje: 01- bijela, 02 - siva, 03 - crna -Mechanism of the upper guide -Color: 01- white, 02 - grey, 03 - black		
111.023.01 02 03	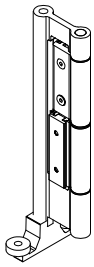	-Mehanizam donje pratilice -Boje: 01- bijela, 02 - siva, 03 - crna -Bottom traverse mechanism -Color: 01- white, 02 - grey, 03 - black		
111.025.01 02 03	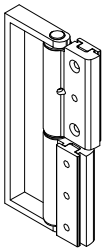	-Baglama sa rukohvatom, otvaranje vani -Boje: 01- bijela, 02 - siva, 03 - crna -Hinge with handrail, outside opening -Color: 01- white, 02 - grey, 03 - black		
111.026.01 02 03	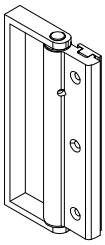	-Rukohvat, otvaranje unutra -Boje: 01- bijela, 02 - siva, 03 - crna -Handrail, inside opening -Color: 01- white, 02 - grey, 03 - black		
140.088		-Brava -Stara oznaka Bing (3626.1)-Master -Lock -Former code Bing (3626.1)-Master		

Oznaka Code	Izgled-presjek View-cross section	Opis Description	Materijal Material	Napomena Remark
435.010		-Vijak za povezivanje klizača F-1584 sa bravom 140.088 Kod proizvođača 6420E.11 (Master Italy) -Screw for connecting slider F-1584 with lock 140.088 Manufacturer's code 6420E.11 (Master Italy)		
105.007	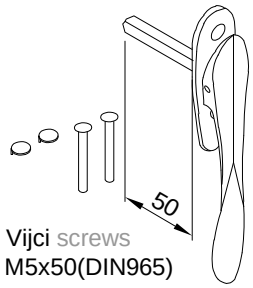 Vijci screws M5x50(DIN965)	-Ručica za bravu -Oznaka proizvođača:Giesse Compa window handle 2494 (firkant L=50 mm) -Lock handle -Manufacturer code:Giesse Compa window handle 2494 (square L=50 mm)		
100.017	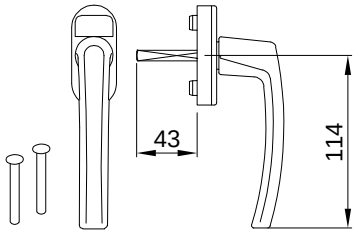	- Ručka za vrata - Oznaka proizvođača: Roto Line Standard - Dužina osovine 43 mm a vijka 55 mm - Door handle - Manufacturer code: Roto Line Standard - Axle length 43 mm and screw 55 mm		
100.018	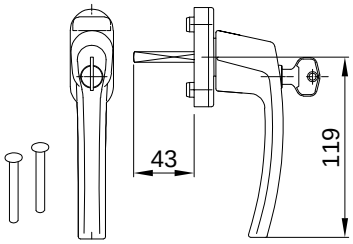	- Ručka sa ključem - Oznaka proizvođača: Roto Line Sicherheit - Dužina osovine 43 mm a vijka 55 mm - Handle with key - Manufacturer code: Roto Line Sicherheit - Axle length 43 mm and screw 55 mm		
102.019	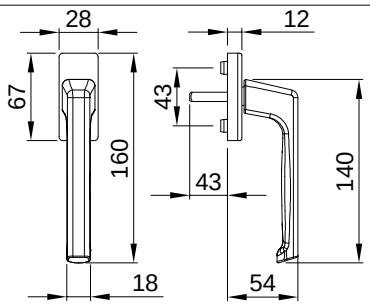	-Ručka Dirigent-F (GU) sa pravokutnim pogonskim dijelom (firkant) 7x7, 43 mm -Oznaka proizvođača: 6-28072-43-0- *11 siva* *06 crna* *07 bijela* -Handle Dirigent-F (GU) with square 7x7, 43 mm -Manufacturer code: 6-28072-43-0- *11 gray* *06 black* *07 white*		
102.020	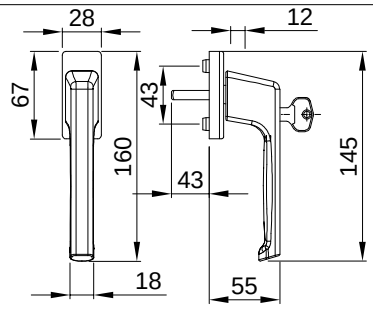	-Ručka Dirigent-F/Z (GU) sa pravokutnim pogonskim dijelom (firkant) 7x7, 43 mm) i ključem -Oznaka proizvođača: 6-28075-00-0- *11 siva* *06 crna* *07 bijela* -Handle Dirigent-F (GU) with square 7x7, 43 mm and key -Manufacturer code: 6-28075-00-0- *11 gray* *06 black* *07 white*		

Oznaka Code	Izgled-presjek View-cross section	Opis Description	Materijal Material	Napomena Remark
122.073	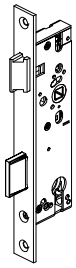	- Brava 35 mm s jezičkom - Oznaka proizvođača GU-BKS: B 1314 0003 - Lock 35 mm with latchbolt - Manufacturer code GU-BKS: B 1314 0003		
126.028	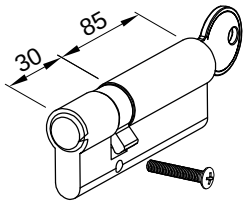	- Uložak (cilindar) za bravu 35mm - Oznaka proizvođača ISEO Serrature: 810930859 (dužina cilindra 115mm (30+85)) - Lock insert (cylinder) 35mm - Manufacturer code ISEO Serrature: 810930859 (length cylinder 115mm (30+85))		
102.028.01 10 inox	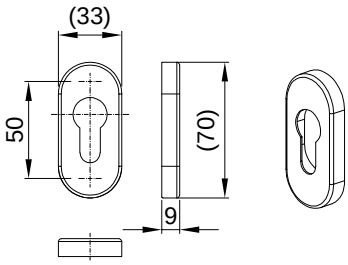	- Ovalna rozeta za zaštitu cilindra serije BELCANTO - Oznaka proizvođača GU-BKS: B-72730-00-0-7 -bijela -1 -pr.boja Al /EV1 / -8 -inox - Boje: 01- bijela; 10 - EV1; inox - Oval rosette for cylinder protection BELCANTO series - Manufacturer code GU-BKS: B-72730-00-0-7 -white / -1 -silver /EV1 /-8 -inox -Color: 01- white; 10 - EV1; inox		
102.027.01 10 inox	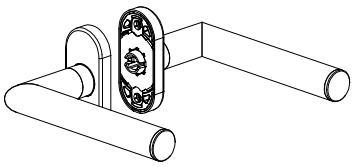	- Ručka za vrata s ovalnom rozetnom serije BELCANTO H2.0 (s prihvatom četvrtke8x8mm) - Oznaka proizvođača GU-BKS: B-70030-03-0-7 -bijela -1 -pr.boja Al /EV1 /-8 -inox - Boje: 01- bijela; 10 - EV1; inox - Door handle with oval rosette serie BELCANTO H2.0 (for spindle 8x8mm) - Manufacturer code GU-BKS: B-70030-03-0-7 -white/-1 -silver /EV1 /-8 -inox - Color: 01- white; 10 - EV1; inox		
102.025	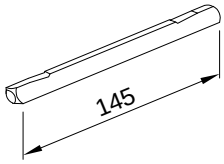	- Četvrtka 8x8 mm - Oznaka proizvođača GU-BKS: B-78400-0O-0-1 (dužina četvrtke L=145 mm) - Square spindle 8x8 mm -Manufacturer code GU-BKS: B-78400-0O-0-1 (spindle length L=145 mm)		

Oznaka Code	Izgled-presjek View-cross section	Opis Description	Materijal Material	Napomena Remark
122.054 122.079		- Prihvatni lim (ravni) 22x3mm - Lijevi - Oznaka proizvođača GU: 6-39257-01-L-8 - Striking plate (flat) 22x3mm - Left - Manufacturer code GU: 6-39257-01-L-8 - Prihvatni lim (ravni) 22x3mm - Desni - Oznaka proizvođača GU: 6-39257-01-R-8 - Striking plate (flat) 22x3mm - Right - Manufacturer code GU: 6-39257-01-R-8		

Brtve
Gaskets

Oznaka Code	Izgled-presjek View-cross section	Opis Description	Materijal Material	Napomena Remark
341.011	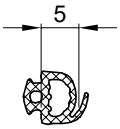	Brtva u ramu, prema krilu Gasket in frame towards sash	EPDM	
341.014	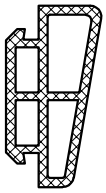	Brtva na spoju krila Gasket on the joint of the sash	EPDM	60 ShA
341.015	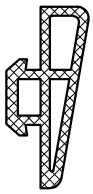	Brtva na spoju krila Gasket on the joint of the sash	EPDM	60 ShA
341.016	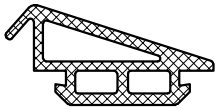	Brtva u krilu prema ramu Gasket in the sash towards frame	EPDM	70 ShA
341.017	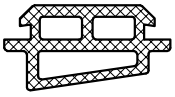	Brtva u krilu prema pragu Gasket in the sash towards frame sill	EPDM	70 ShA
341.018	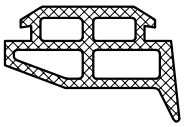	Brtva u krilu prema pragu Gasket in the sash towards sill	EPDM	70 ShA

Oznaka Code	Izgled-presjek View-cross section	Opis Description	Materijal Material	Napomena Remark
344.085	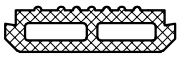	Brtva u ramu Gasket in frame	TPE	65 ShA
321.001		-Brtva u krilu -Stara oznaka (Z106) -Sash gasket -Former code (Z106)	EPDM	61
311.001	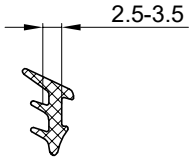	-Brtva prema staklu /unutarnja/ -Stara oznaka (921) -Gasket towards glass /interior/ -Former code (921)	EPDM	71
311.002	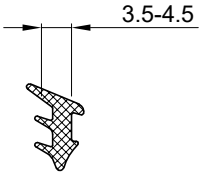	-Brtva prema staklu /unutarnja/ -Stara oznaka (918) -Gasket towards glass /interior/ -Former code (918)	EPDM	71
321.002	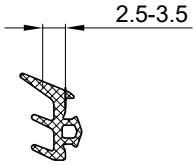	-Brtva prema staklu /vanjska/ -Stara oznaka (Z111) -Gasket towards glass /exterior/ -Former code (Z111)	EPDM	61
321.003	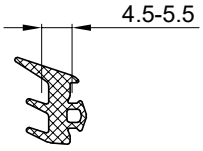	-Brtva prema staklu /vanjska/ -Stara oznaka (Z113) -Gasket towards glass /exterior/ -Former code (Z113)	EPDM	61

Oznaka Code	Izgled-presjek View-cross section	Opis Description	Materijal Material	Napomena Remark
311.003	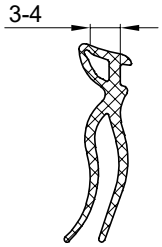	-Brtva prema staklu /unutarnja,nosi 3-4 mm/ -Gasket towards glass /interior,carries 3-4 mm/	EPDM	71
311.004	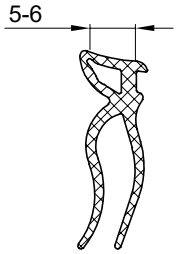	-Brtva prema staklu /unutarnja,nosi 5-6 mm/ -Gasket towards glass /interior,carries 5-6 mm/	EPDM	71
311.005	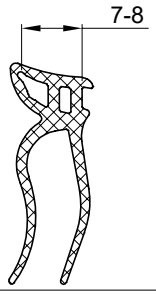	-Brtva prema staklu /unutarnja,nosi 7-8 mm/ -Gasket towards glass /interior,carries 7-8 mm/	EPDM	71

Dodaci
Accessories

Oznaka Code	Opis Description	Izgled-presjek View- cross section	Materijal Material	Napomena Napomena
433.105	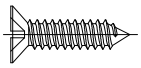	Vijak 3.9x16, DIN 7982 Vijak 3.9x16, DIN 7982		
433.018	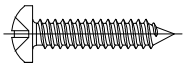	Vijak 3.9x19, DIN 7981 Vijak 3.9x19, DIN 7981		
433.021	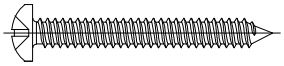	Vijak 3.9x32, DIN 7981 Vijak 3.9x32, DIN 7981		
433.031	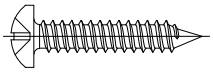	- Vijak 4.2x22, DIN 7981 Vijak 4.2x22, DIN 7981		
433.036	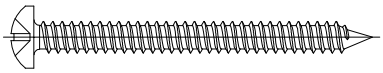	- Vijak 4.2x45, DIN 7981 Vijak 4.2x45, DIN 7981		

Oznaka Code	Opis Description	Izgled-presjek View- cross section	Materijal Material	Napomena Napomena
431.920		Vijak M5x50, DIN 965 Vijak M5X50, DIN965		
431.921		Vijak M5x60, DIN 965 Vijak M5X60, DIN965		
220.029	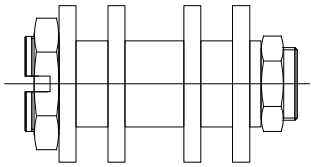	- Snop glodala za obradu profila okvira rama FT-1300F prema profilu okvira rama FT-1302F	Čelik	

Prikaz stakljenja
Glazing

Vanjske brtve Outside gasket		Unutarnje brtve Inside gasket	
321.002 (Z111)	321.003 (Z113)	311.003	311.004
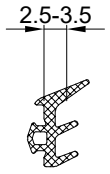	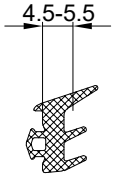	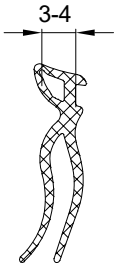	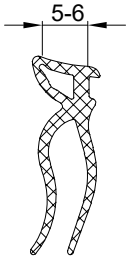

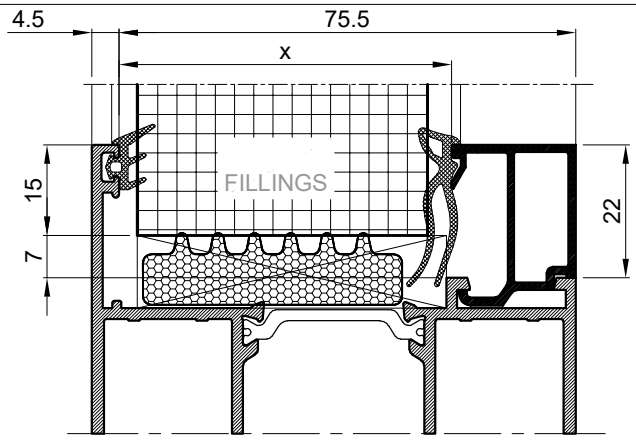

Ispuna X Fillings X	Vanjska brtva Outside gas.	Unutar. brtva Inside gasket	LAJSNE ZA STAKLO BEAD FOR GLASS			
23-25	321.003	311.004				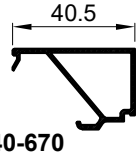 40.5 **Z40-670**
25-27	321.002	311.004				
	321.003	311.003				
28-30	321.003	311.004	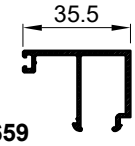 35.5 **Z40-659**			35.5 **Z40-669**
30-32	321.002	311.004				
	321.003	311.003				
33-35	321.003	311.004	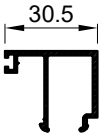 30.5 **Z40-653**	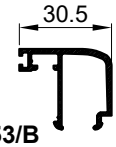 30.5 **Z40-653/B**	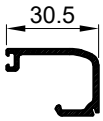 30.5 **Z40-661**	30.5 **Z40-668**
35-37	321.002	311.004				
	321.003	311.003				
38-40	321.003	311.004	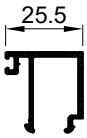 25.5 **Z40-658**			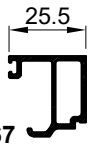 25.5 **Z40-667**
40-42	321.002	311.004				
	321.003	311.003				
43-45	321.003	311.004	20.5 **Z40-644**	20.5 **Z40-646**	20.5 **Z40-648**	20.5 **Z40-666**
45-47	321.002	311.004				
	321.003	311.003				
48-50	321.003	311.004	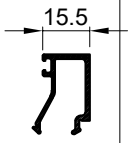 15.5 **M45-709**	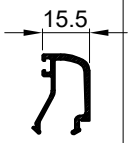 15.5 **M45-740**	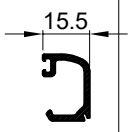 15.5 **Z40-662**	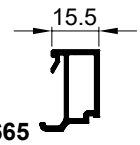 15.5 **Z40-665**
50-52	321.002	311.004				
	321.003	311.003				
53-55	321.003	311.004	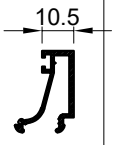 10.5 **Z40-636**	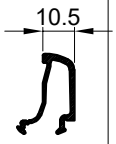 10.5 **Z40-647**	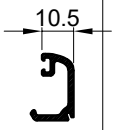 10.5 **Z40-649**	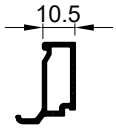 10.5 **Z40-664**
55-57	321.002	311.004				
	321.003	311.003				
58-60	321.003	311.004	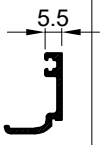 5.5 **Z40-656**			
60-62	321.002	311.004				
	321.003	311.003				
62-64	321.003	311.004	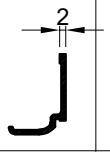 2 **Z40-660**			
64-66	321.002	311.004				
	321.003	311.003				

- Preporuke za raspored podmetača kod ugradnje elemenata za ispunu

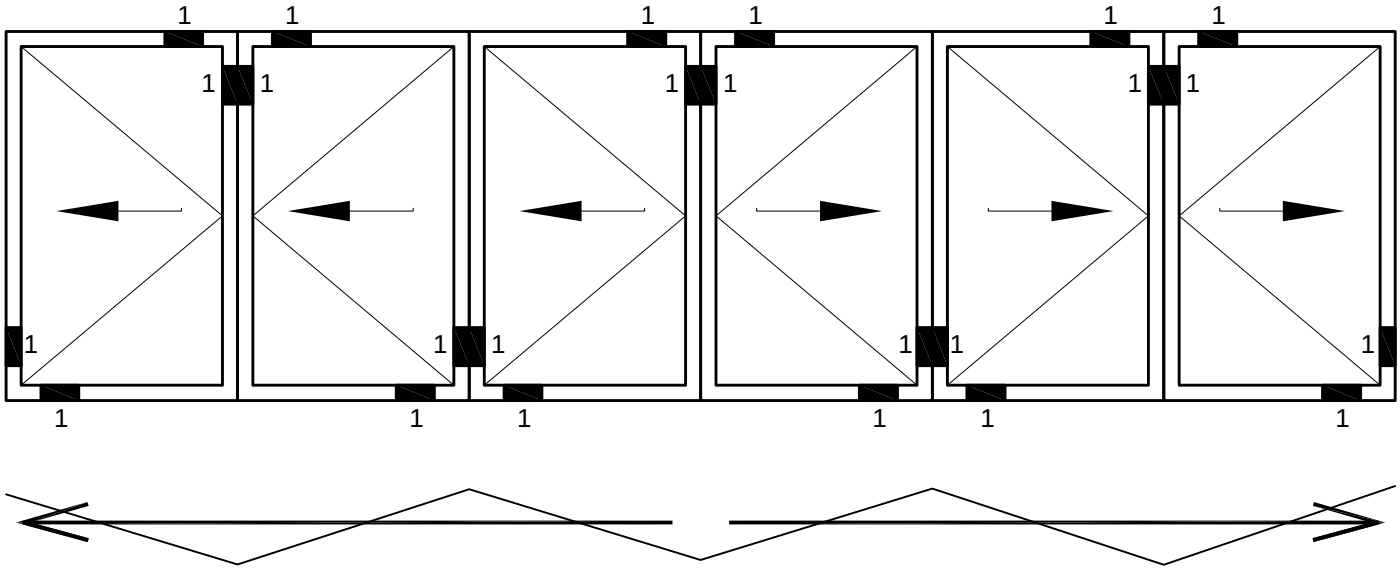

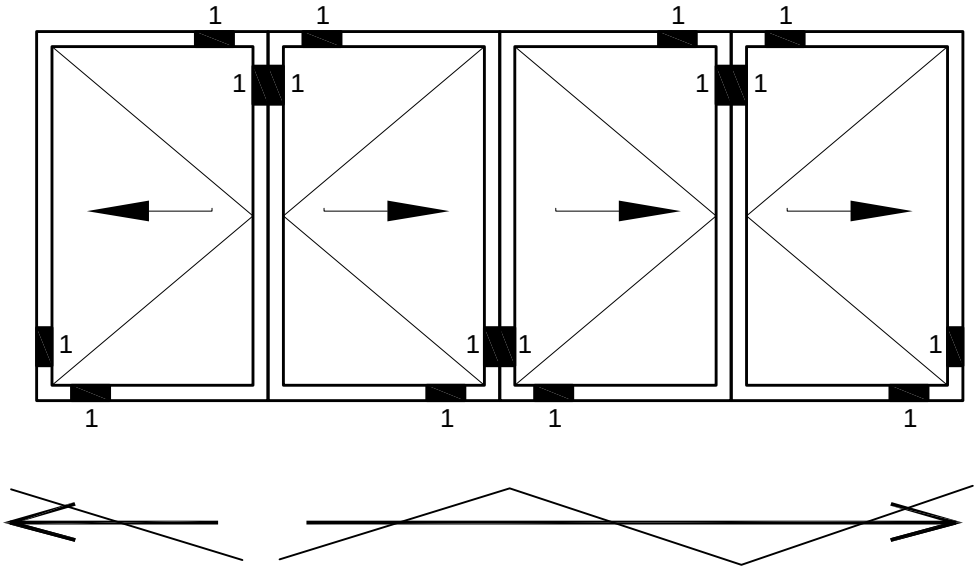

nosivi podmetač

odstojni podmetač

Materijal podmetača: PVC

1* Za staklene plohe širine preko 1 m, potrebno je postaviti 2 nosiva podmetača dužine najmanje 100 mm iznad ležaja okretnih elemenata

Presjeci
Cross section

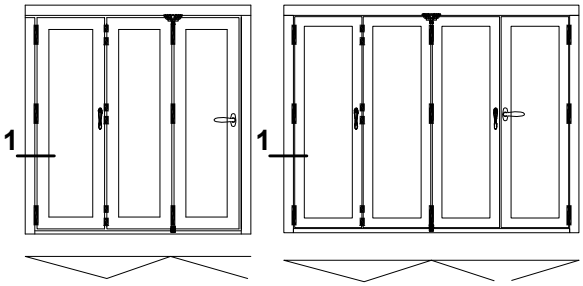

HARMO OTVARANJE
FOLDING OPENING

PRESJEK 1
CROSS SECTION 1

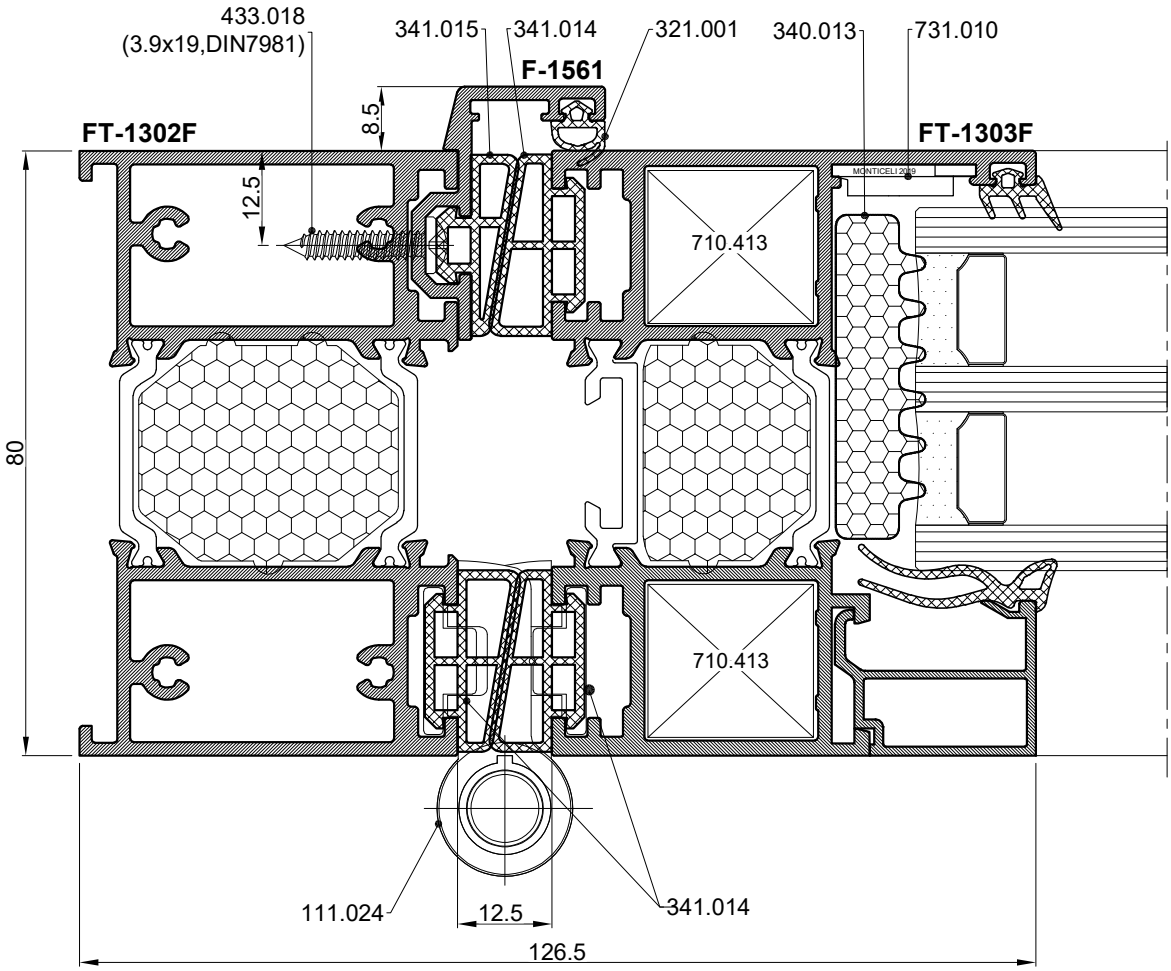

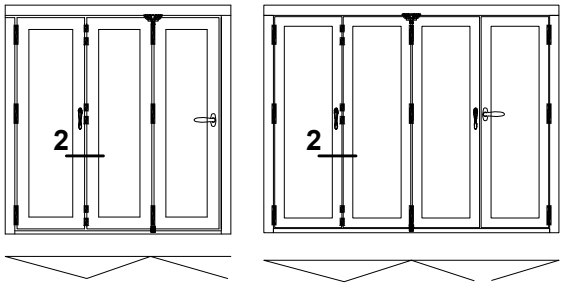

HARMO OTVARANJE
FOLDING OPENING

PRESJEK 2
CROSS SECTION 2

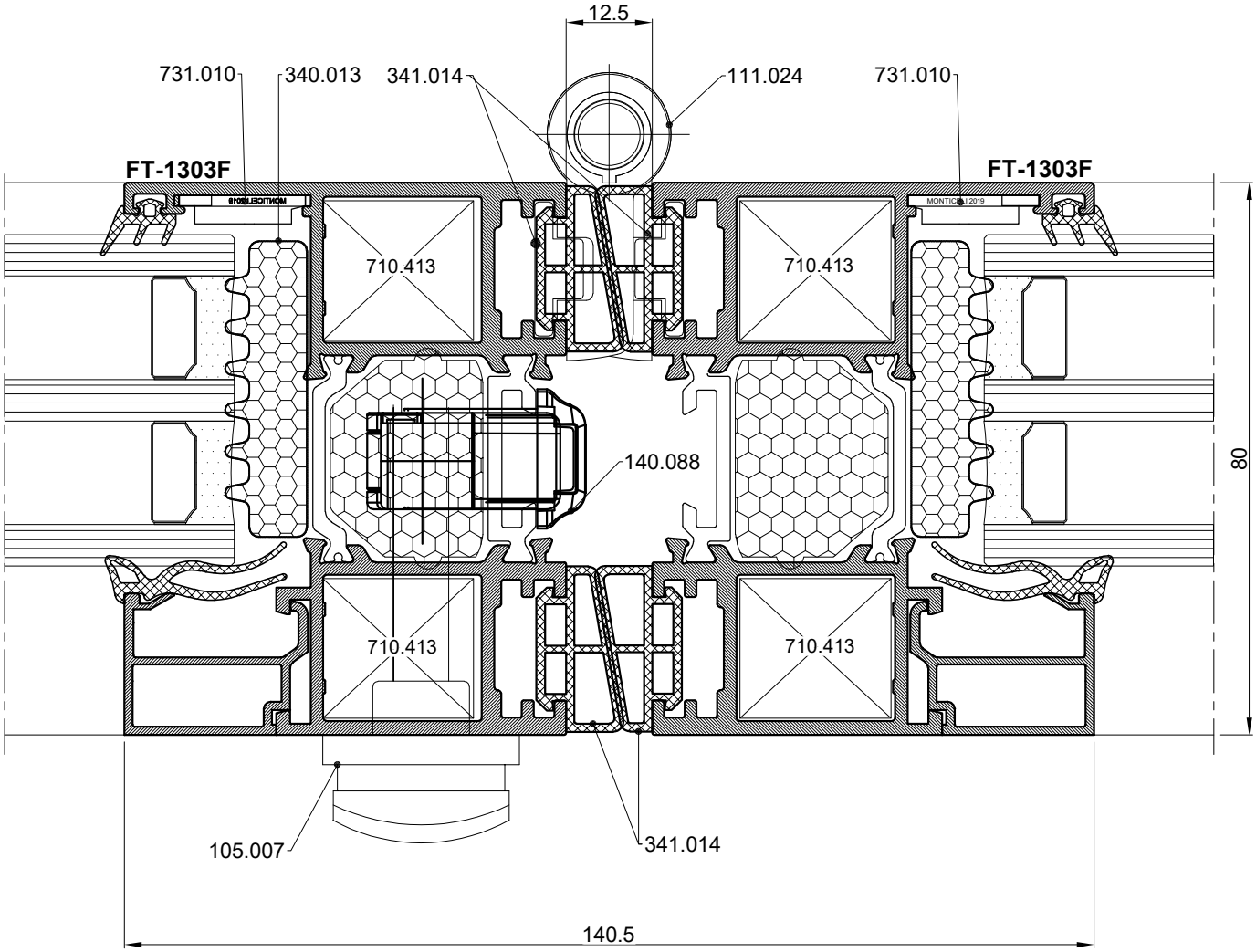

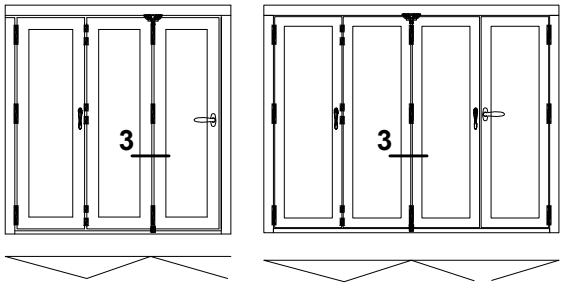

HARMO OTVARANJE
FOLDING OPENING

PRESJEK 3
CROSS SECTION 3

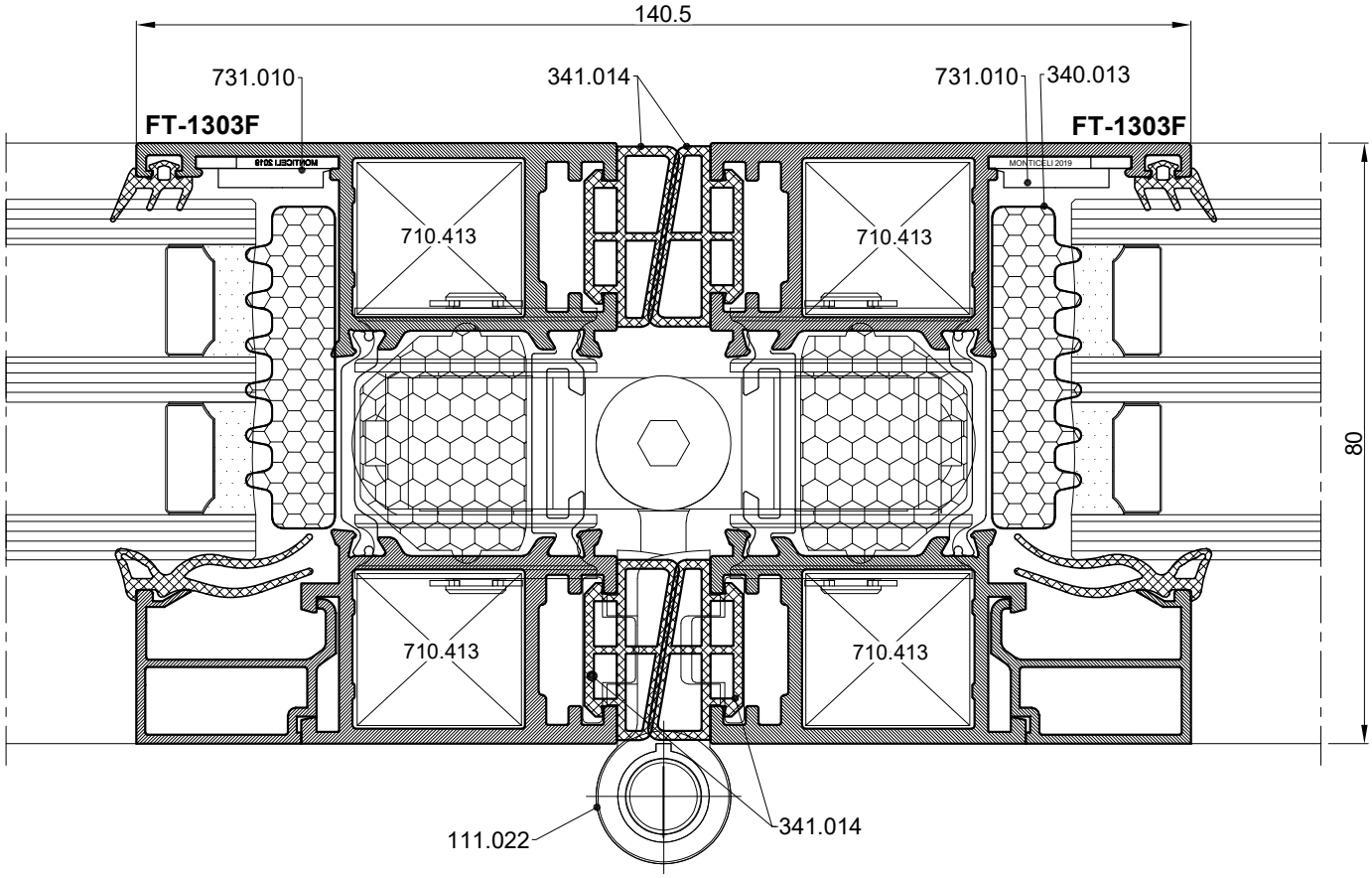

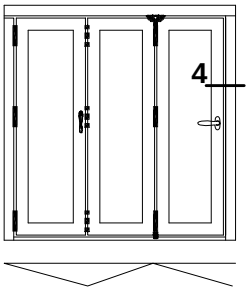

HARMO OTVARANJE
FOLDING OPENING

PRESJEK 4
CROSS SECTION 4

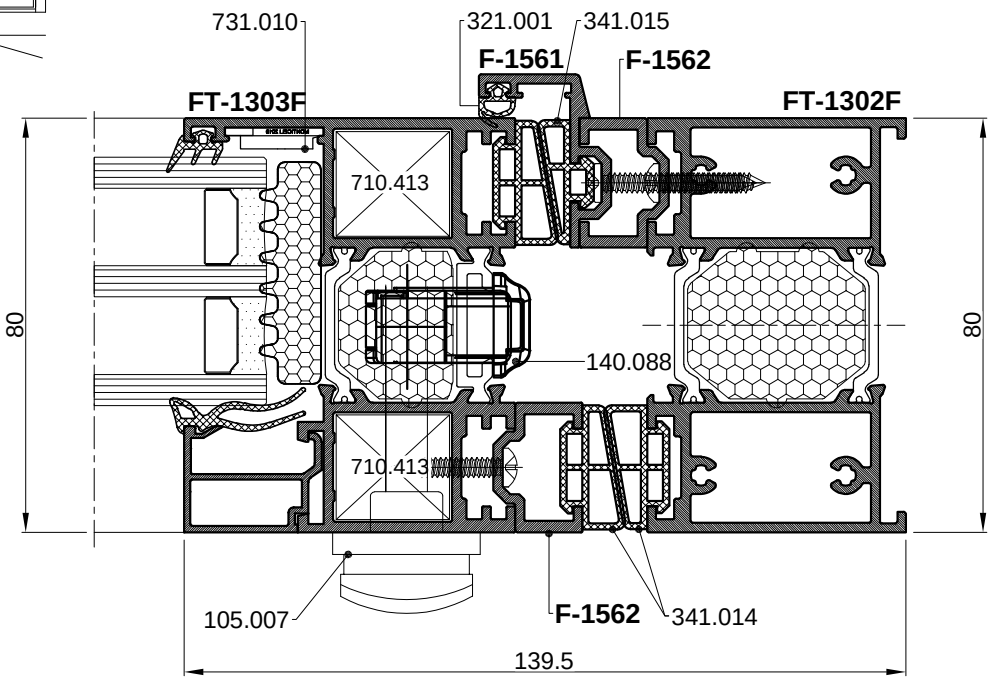

PRESJEK 4
CROSS SECTION 4

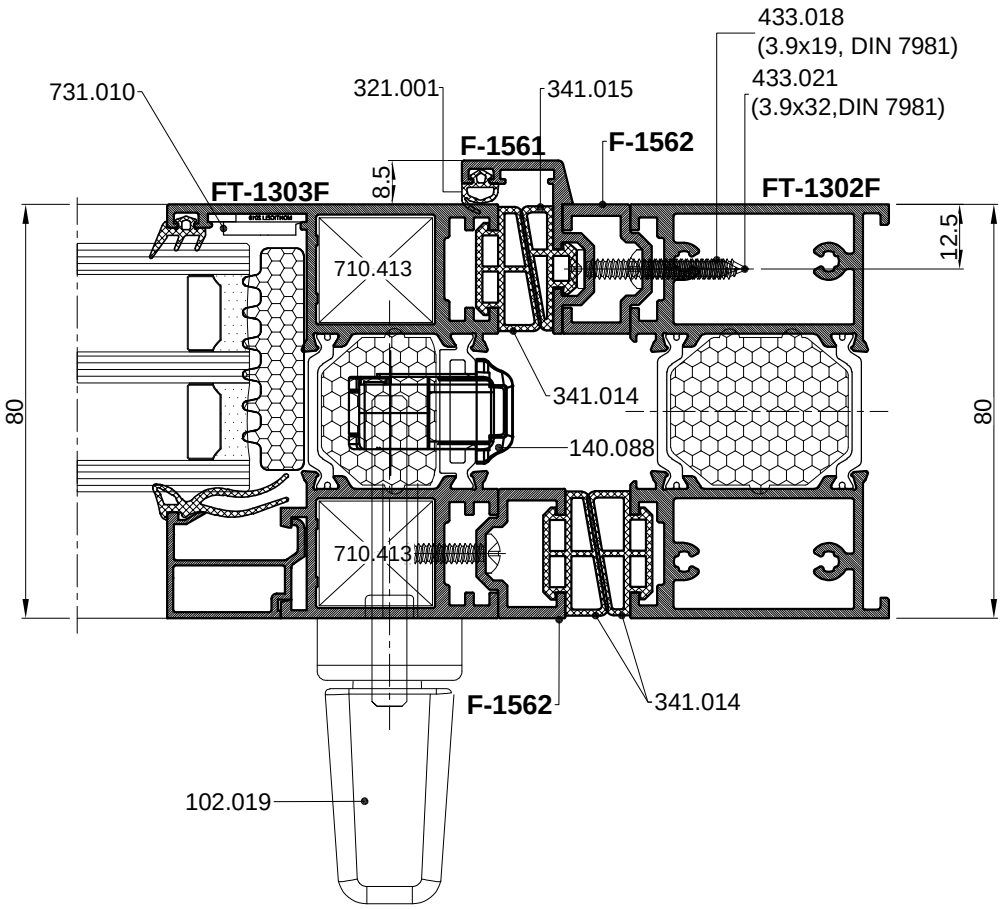

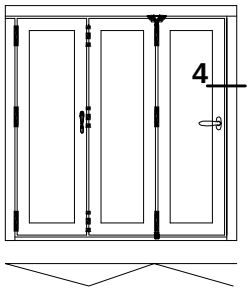

PRESJEK 4
CROSS SECTION 4

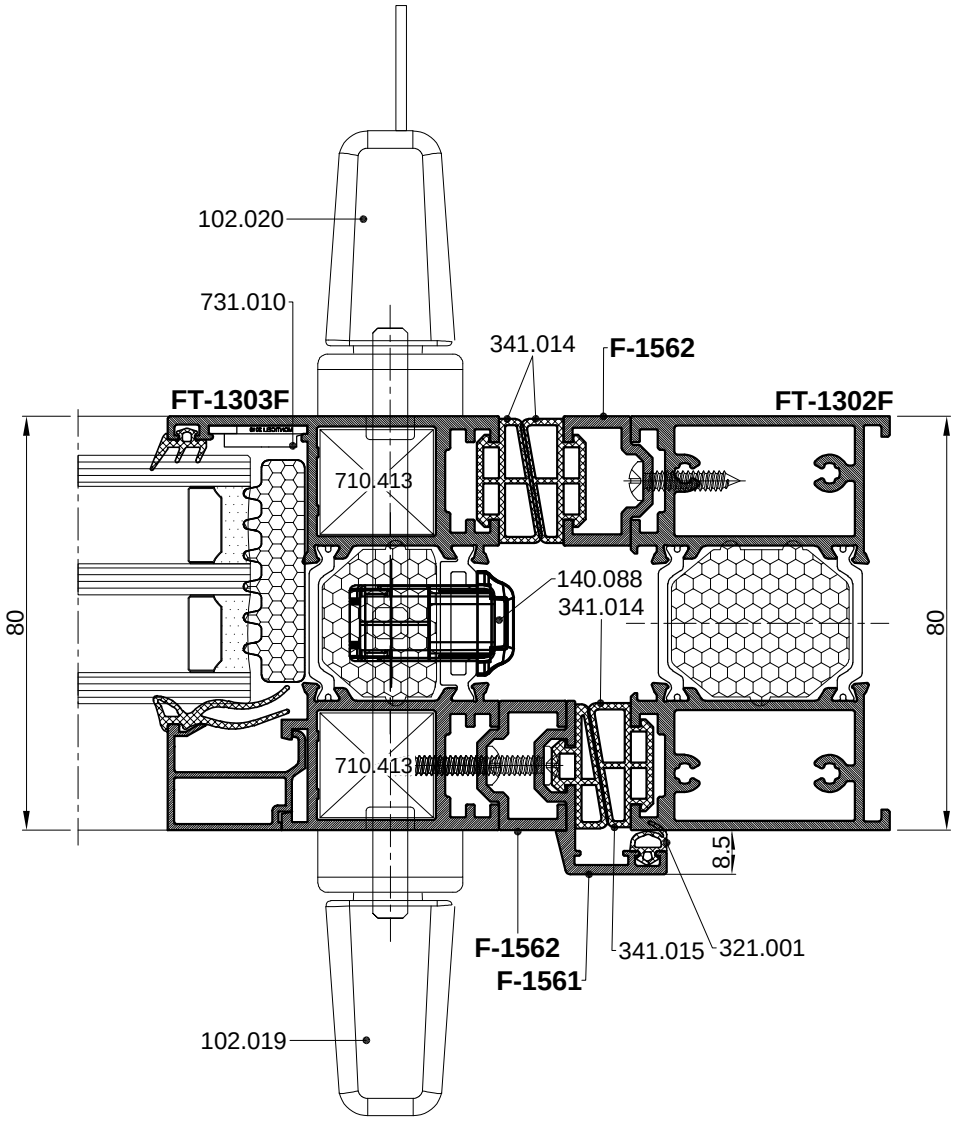

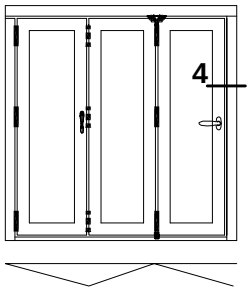

PRESJEK 4
CROSS SECTION 4

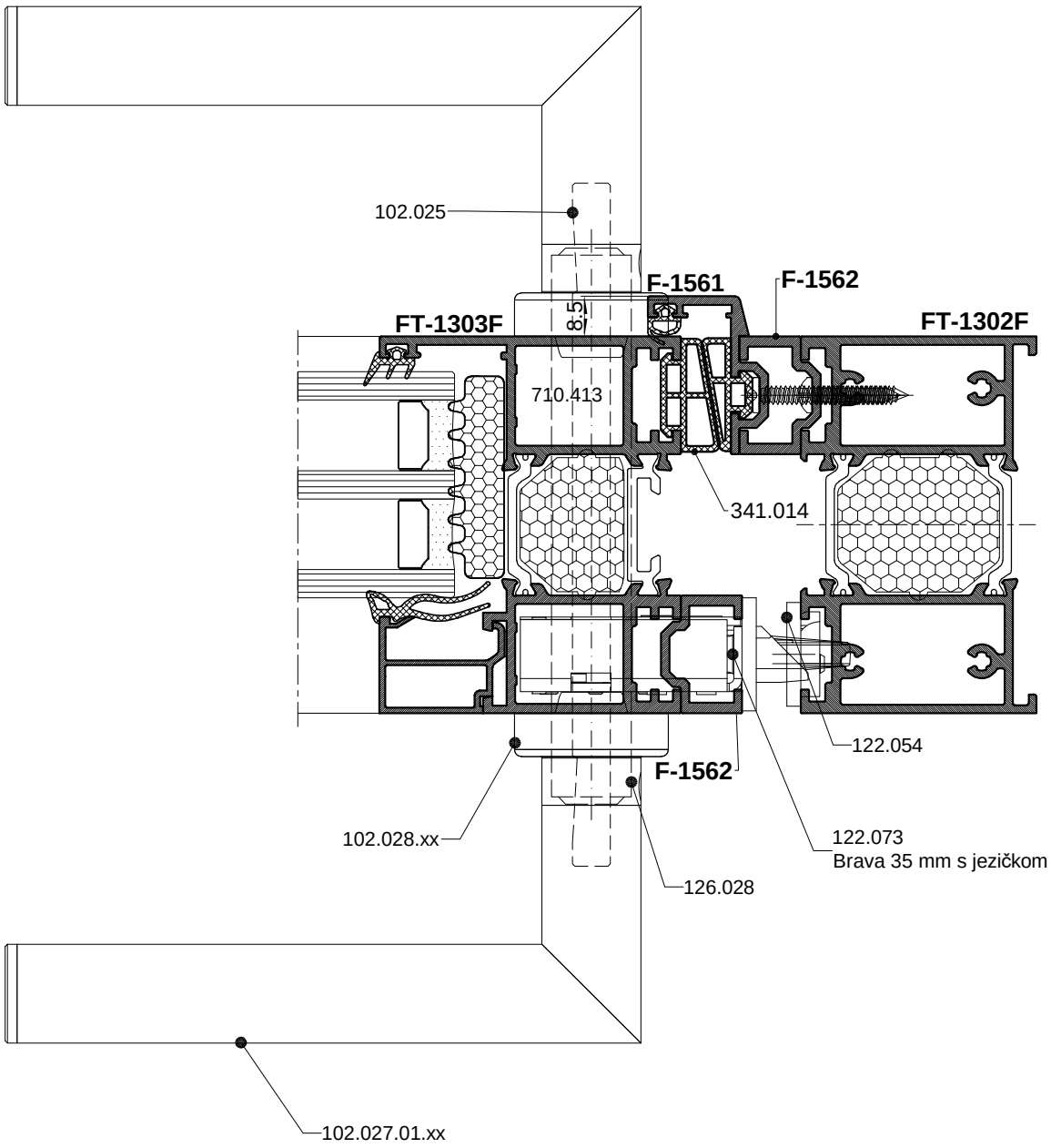

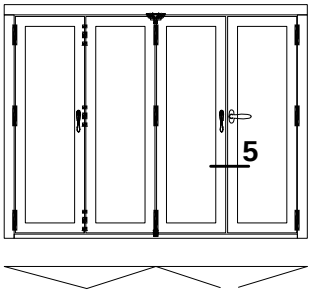

HARMO OTVARANJE
FOLDING OPENING

PRESJEK 5
CROSS SECTION 5

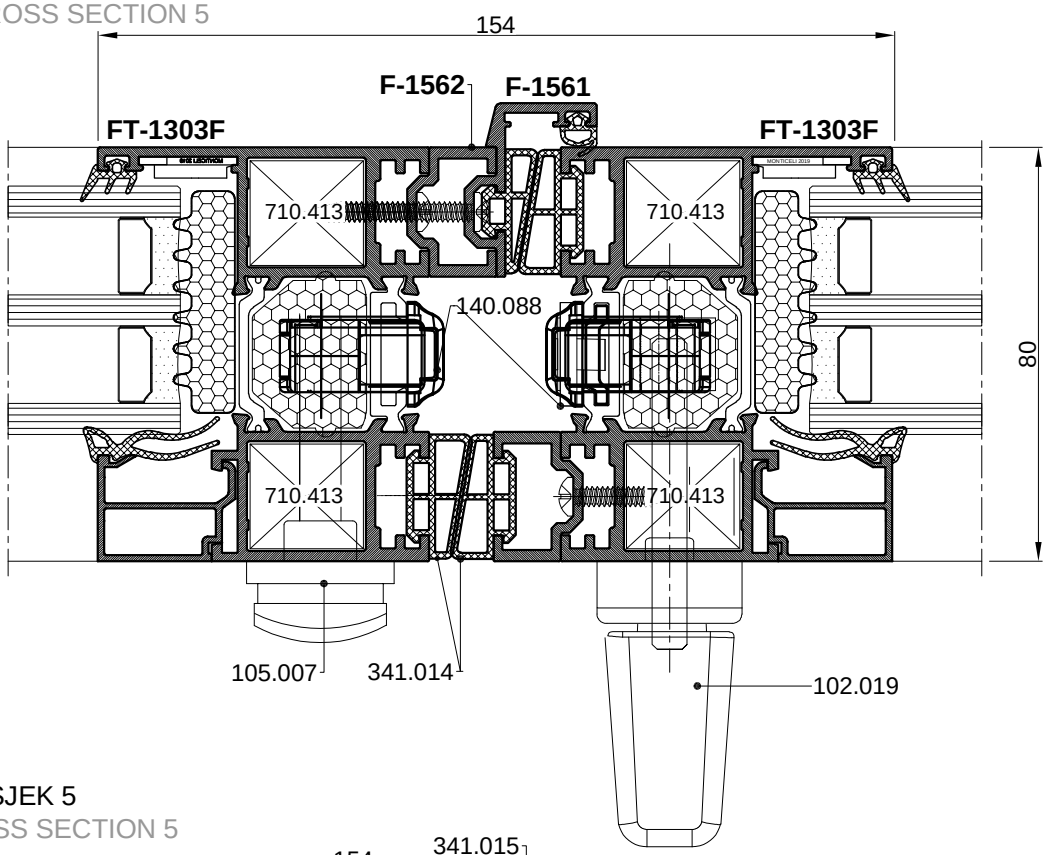

PRESJEK 5
CROSS SECTION 5

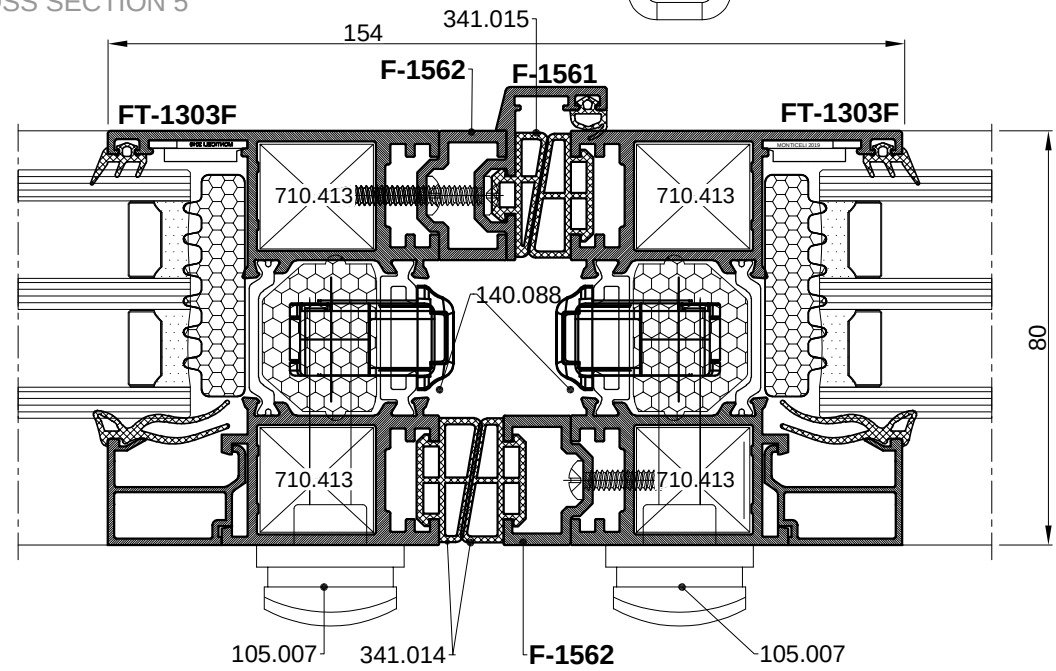

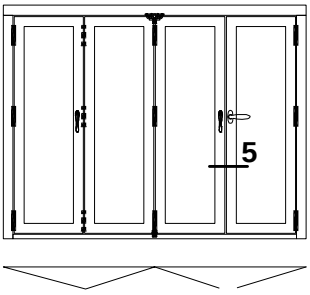

PRESJEK 5
CROSS SECTION 5

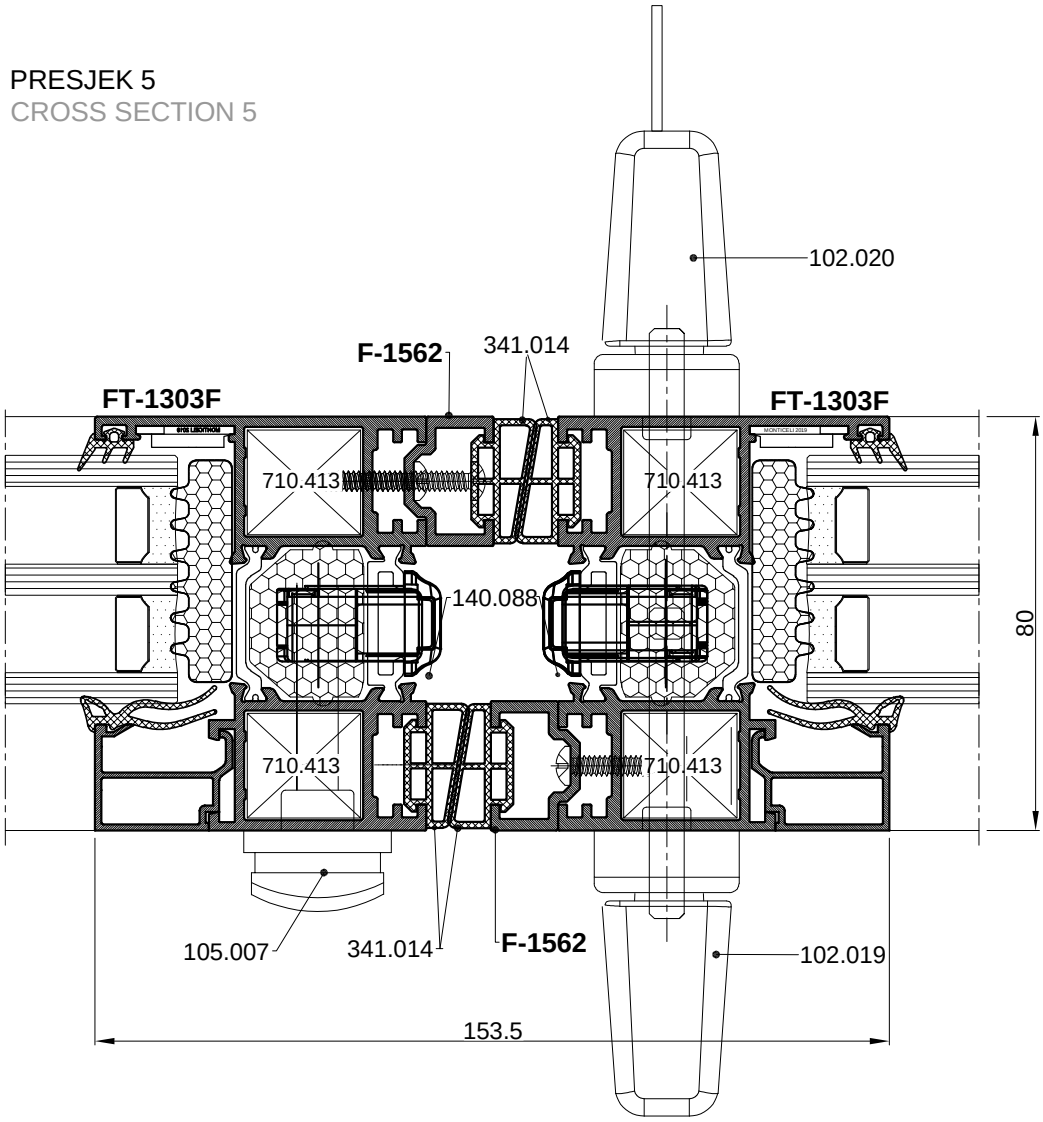

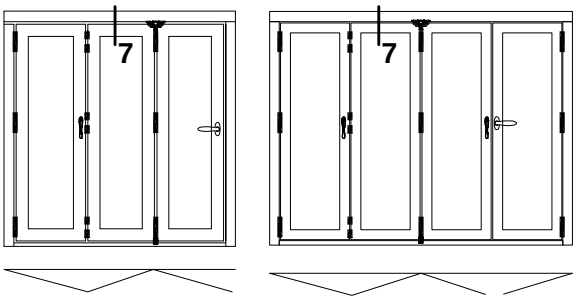

HARMO OTVARANJE
FOLDING OPENING

PRESJEK 7
CROSS SECTION 7

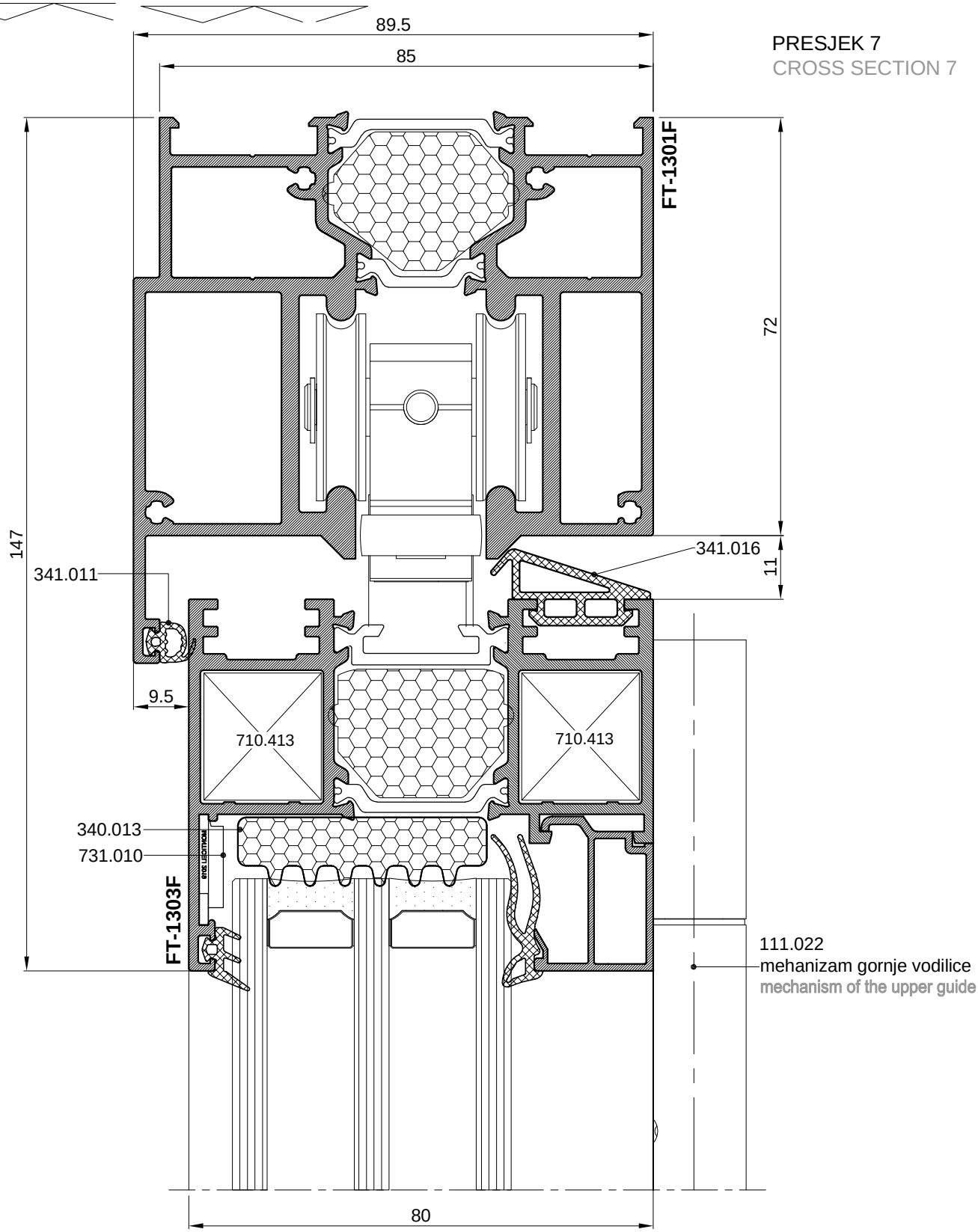

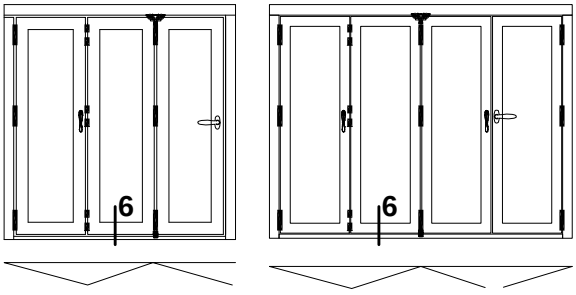

HARMO OTVARANJE
FOLDING OPENING

PRESJEK 6
CROSS SECTION 6

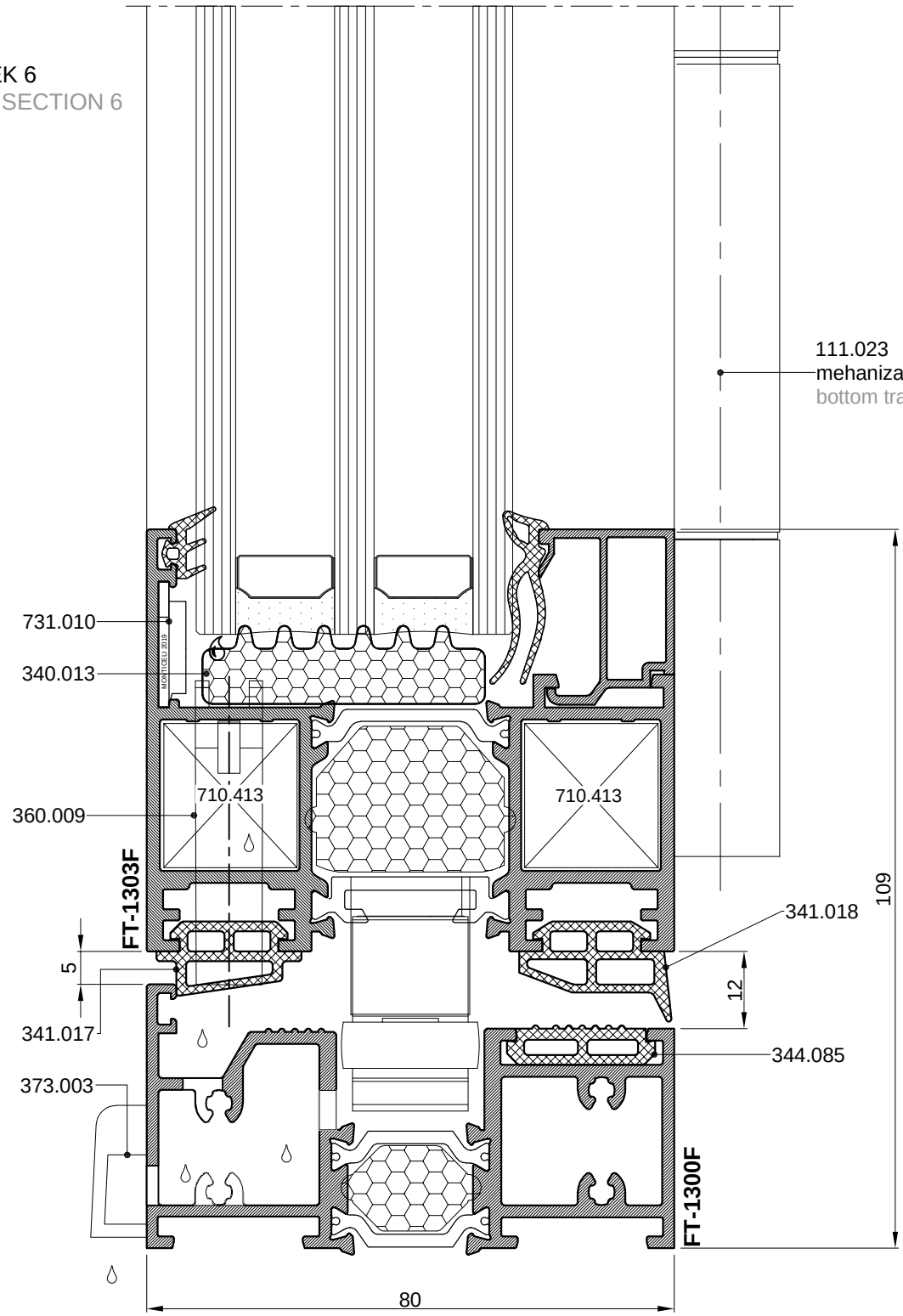

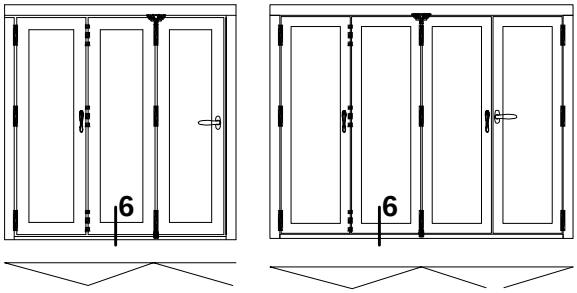

HARMO OTVARANJE
FOLDING OPENING

PRESJEK 6
CROSS SECTION 6

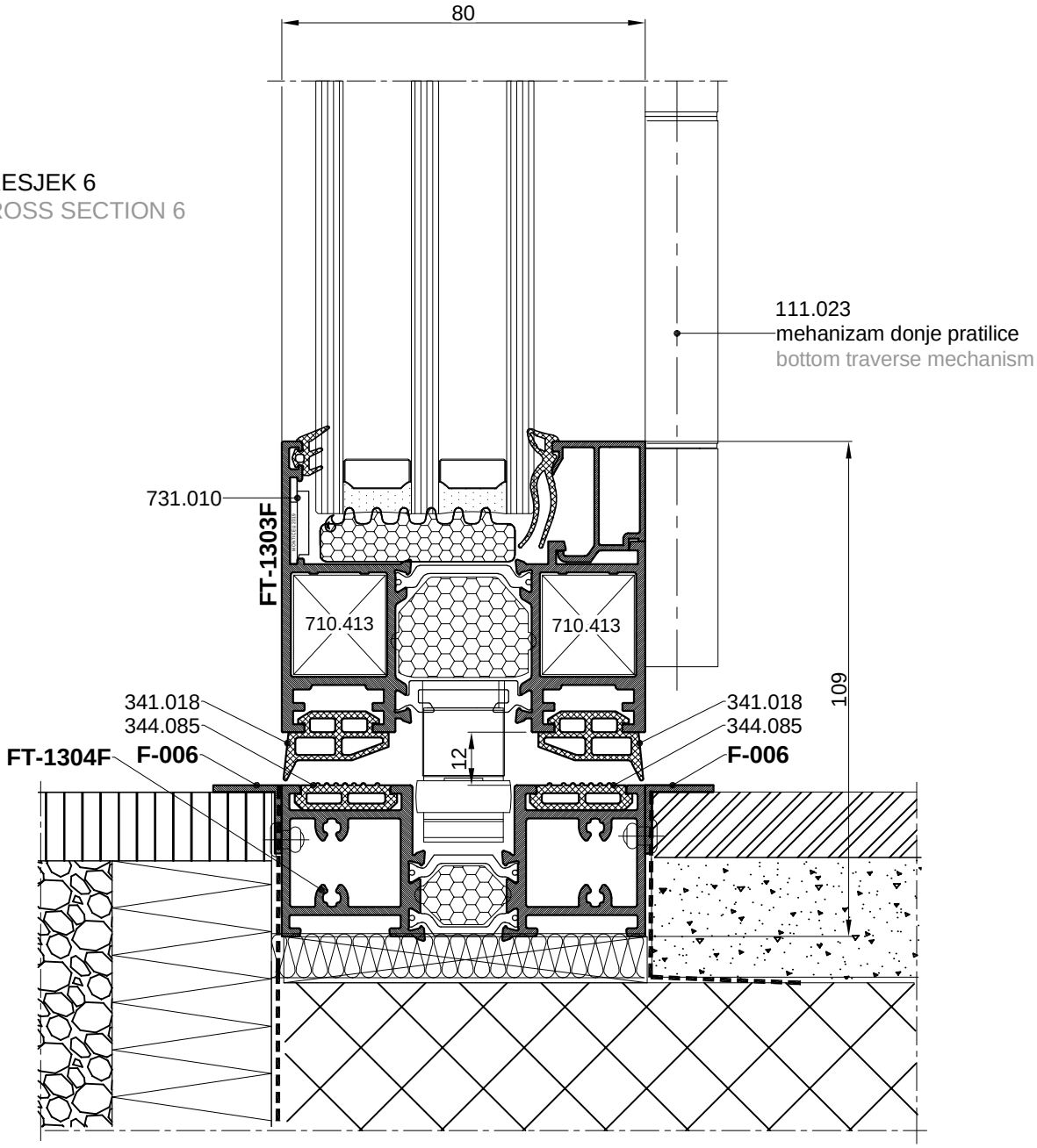

HARMO OTVARANJE
FOLDING OPENING
Harmo vrata s fiksnim dijelom u nadsvijetlu
Folding door with fixed part in the foreground

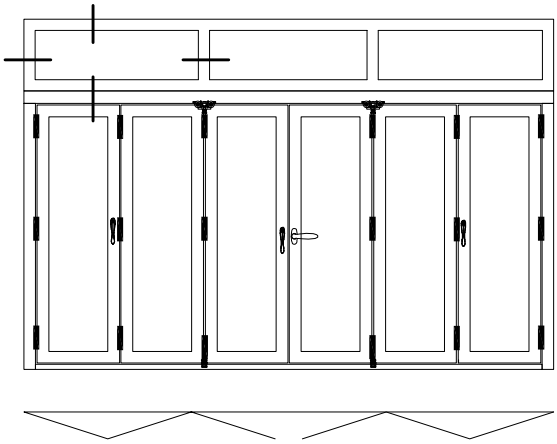

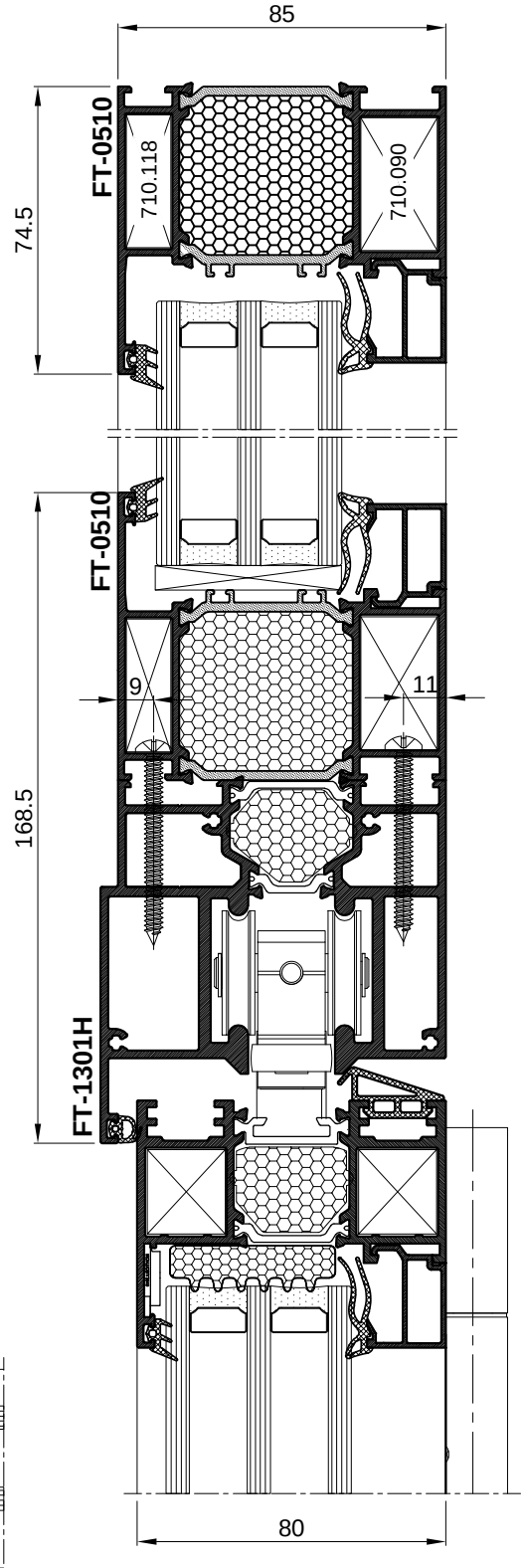

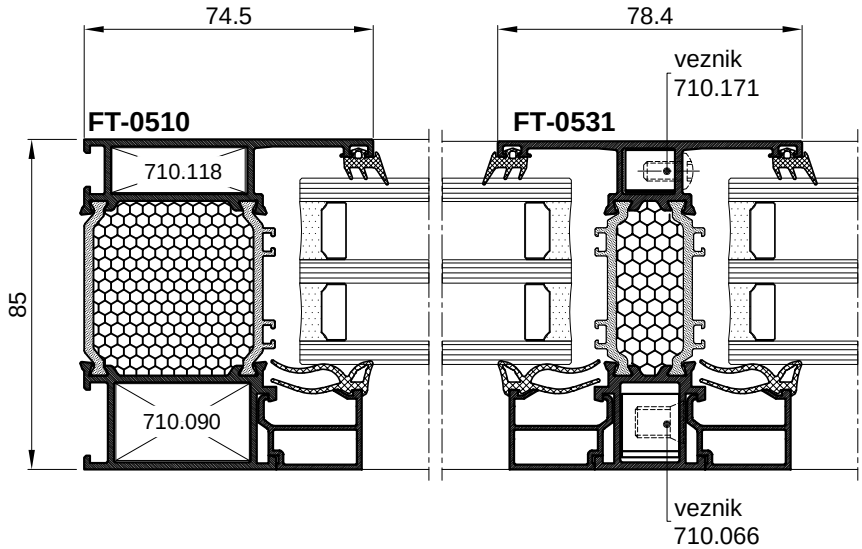

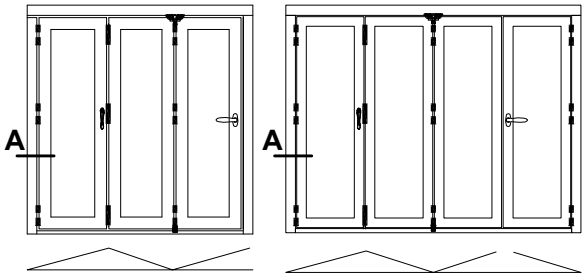

HARMO OTVARANJE
FOLDING OPENING

PRESJEK A
CROSS SECTION A

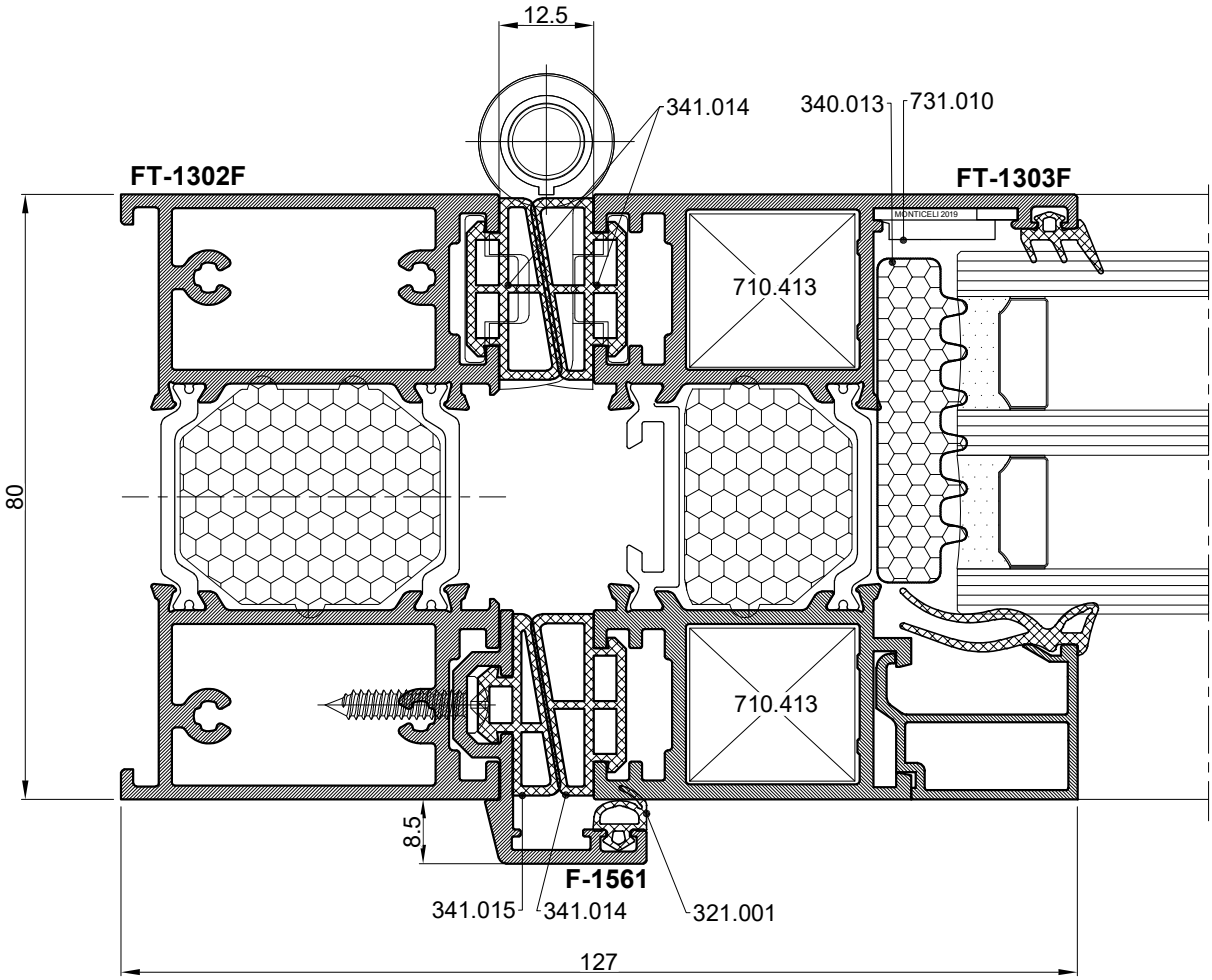

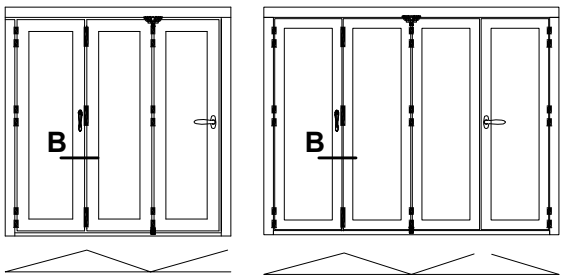

HARMO OTVARANJE
FOLDING OPENING

PRESJEK B
CROSS SECTION B

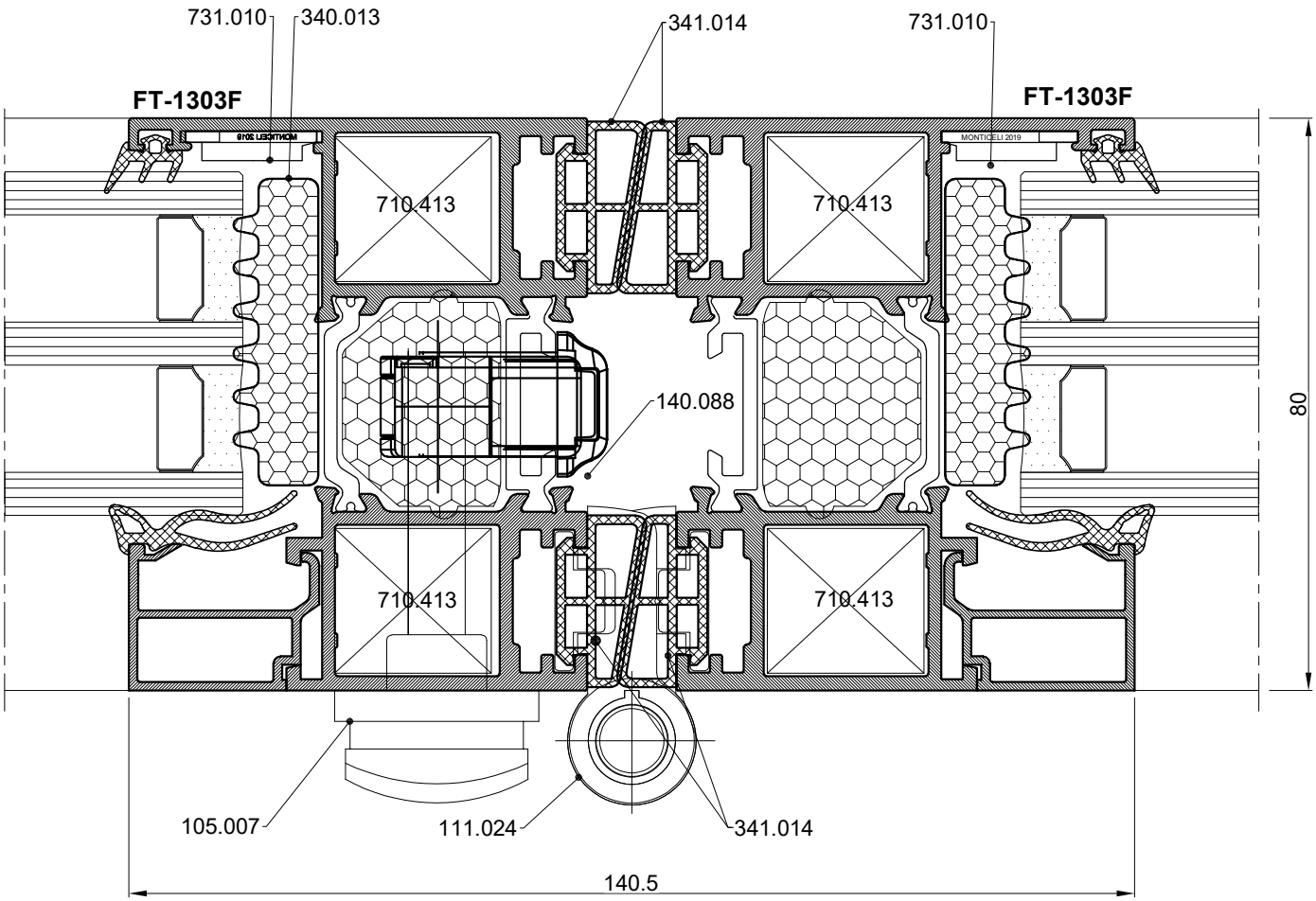

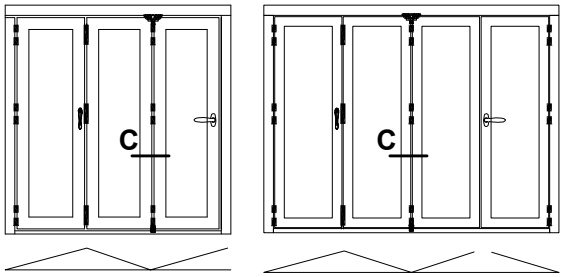

HARMO OTVARANJE
FOLDING OPENING

PRESJEK C
CROSS SECTION C

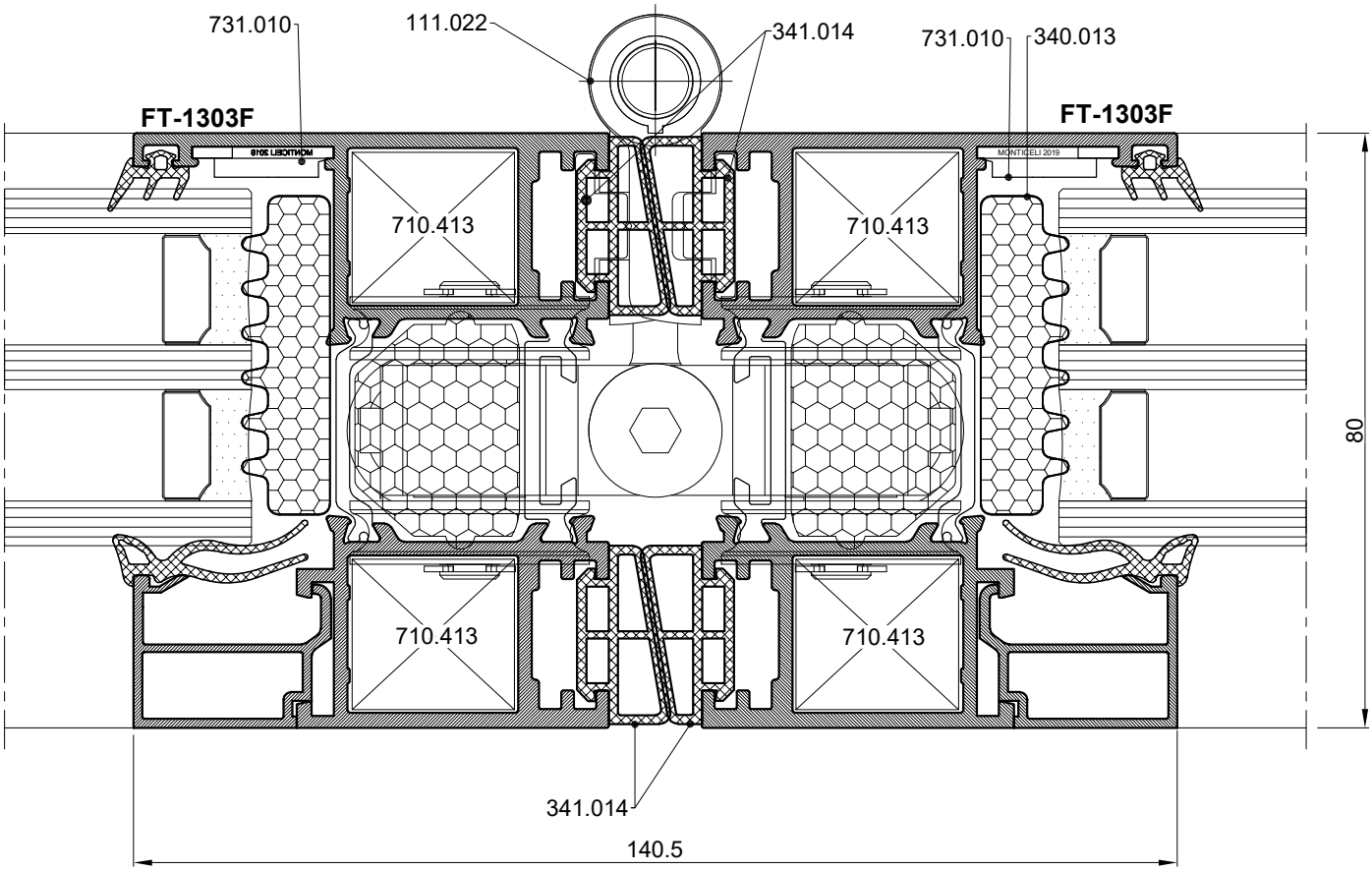

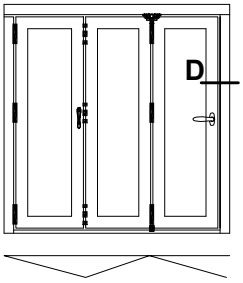

HARMO OTVARANJE
FOLDING OPENING

PRESJEK D
CROSS SECTION D

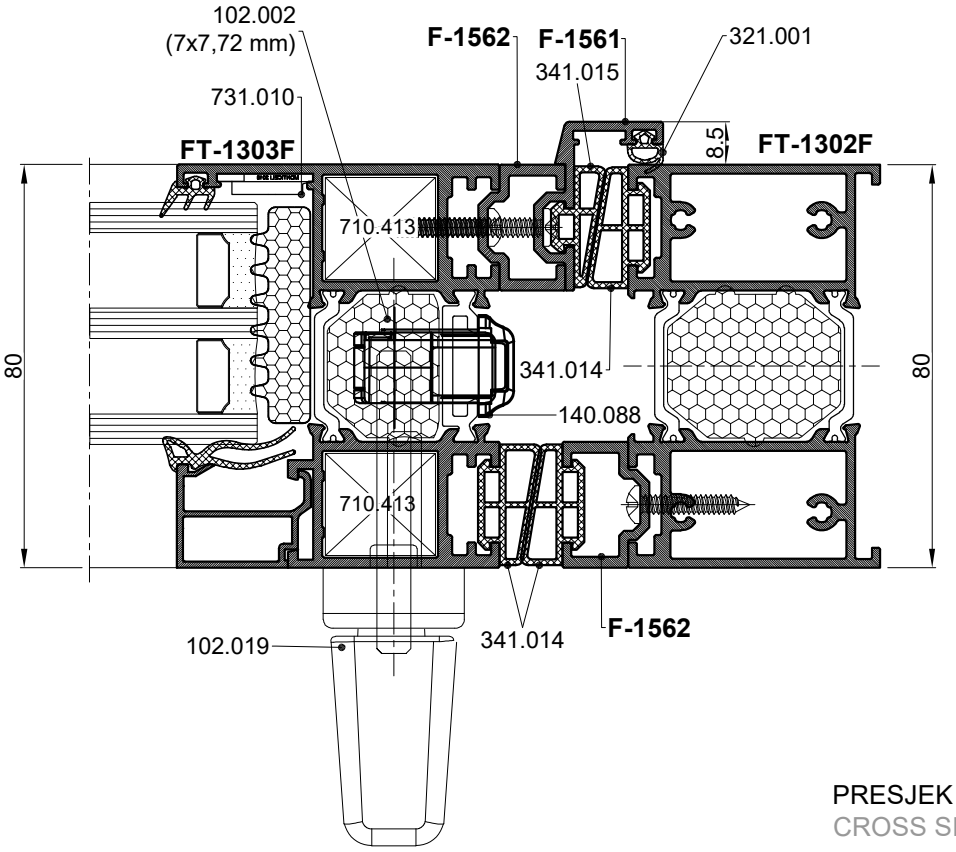

PRESJEK D
CROSS SECTION D

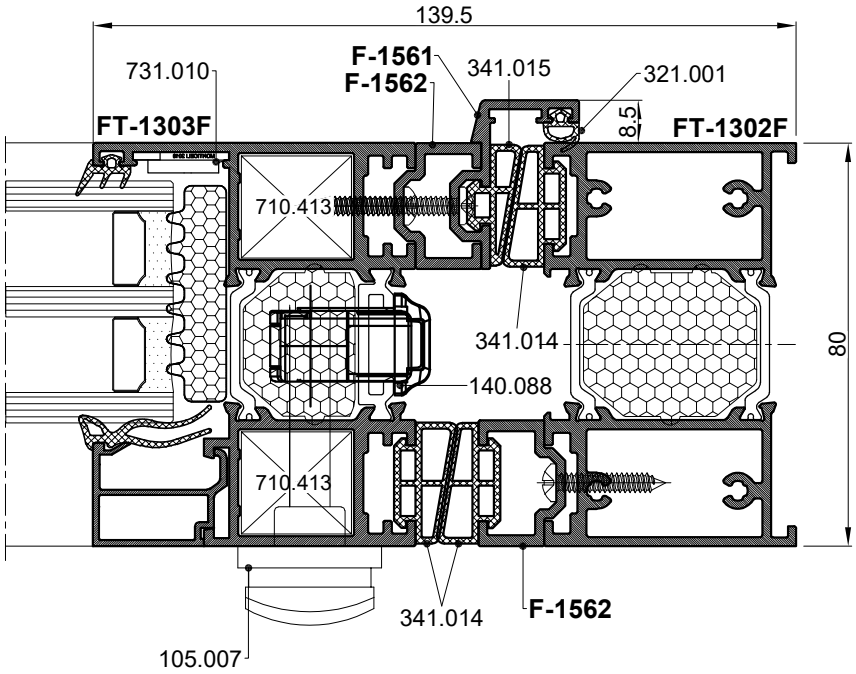

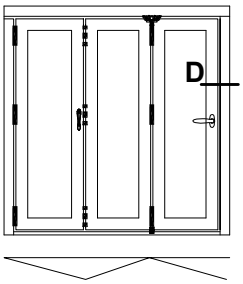

PRESJEK D
CROSS SECTION D

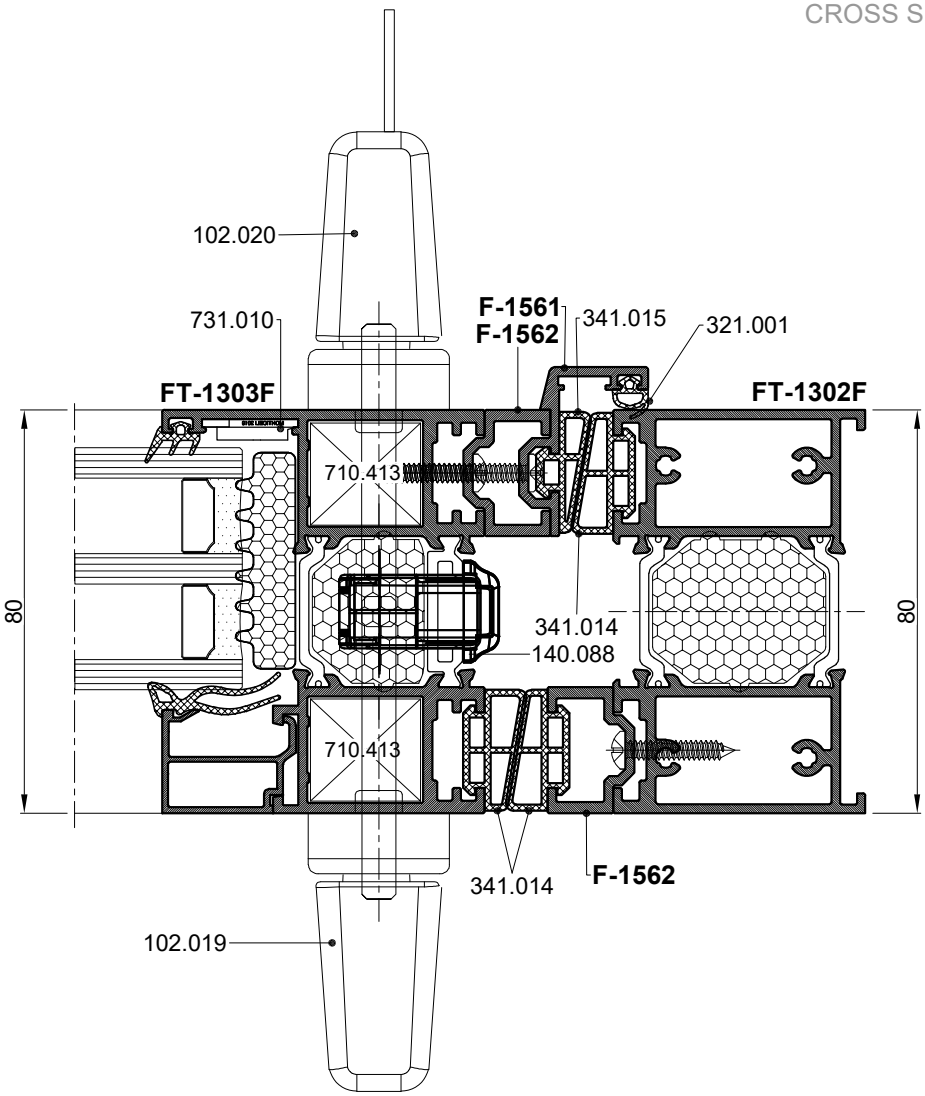

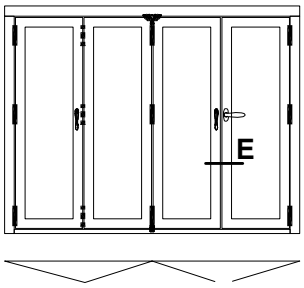

HARMO VANI
FOLDING OPENING

PRESJEK E
CROSS SECTION E

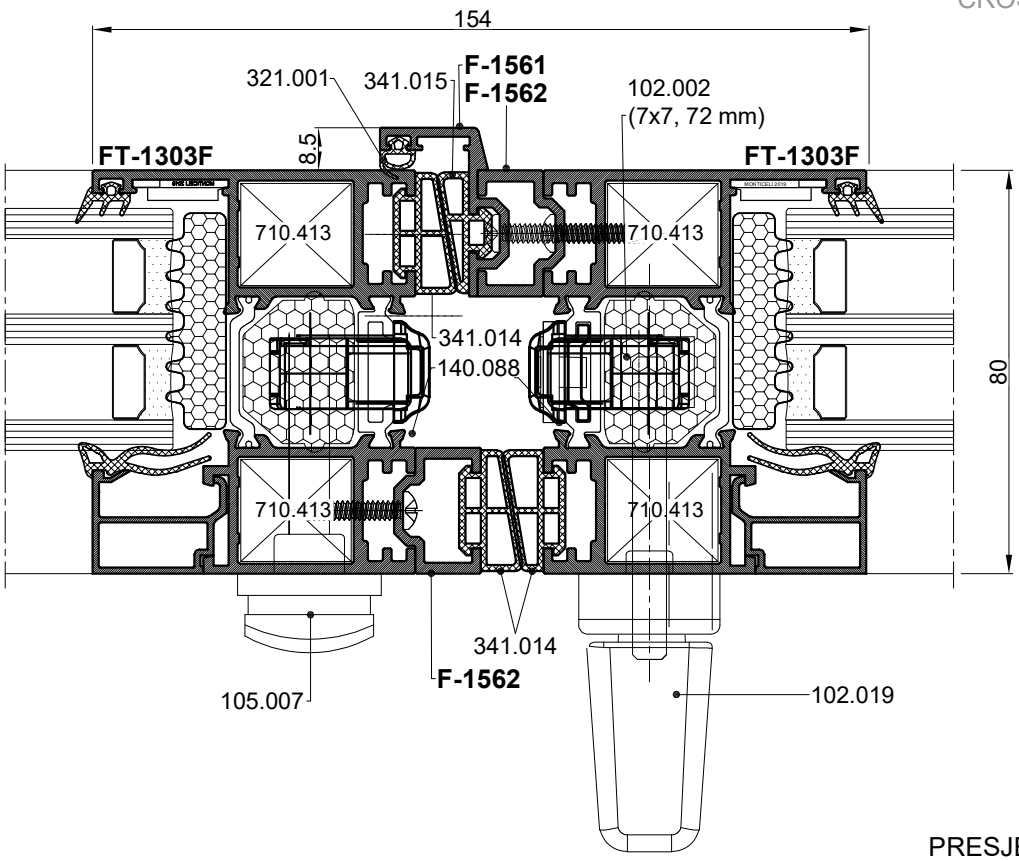

PRESJEK E
CROSS SECTION E

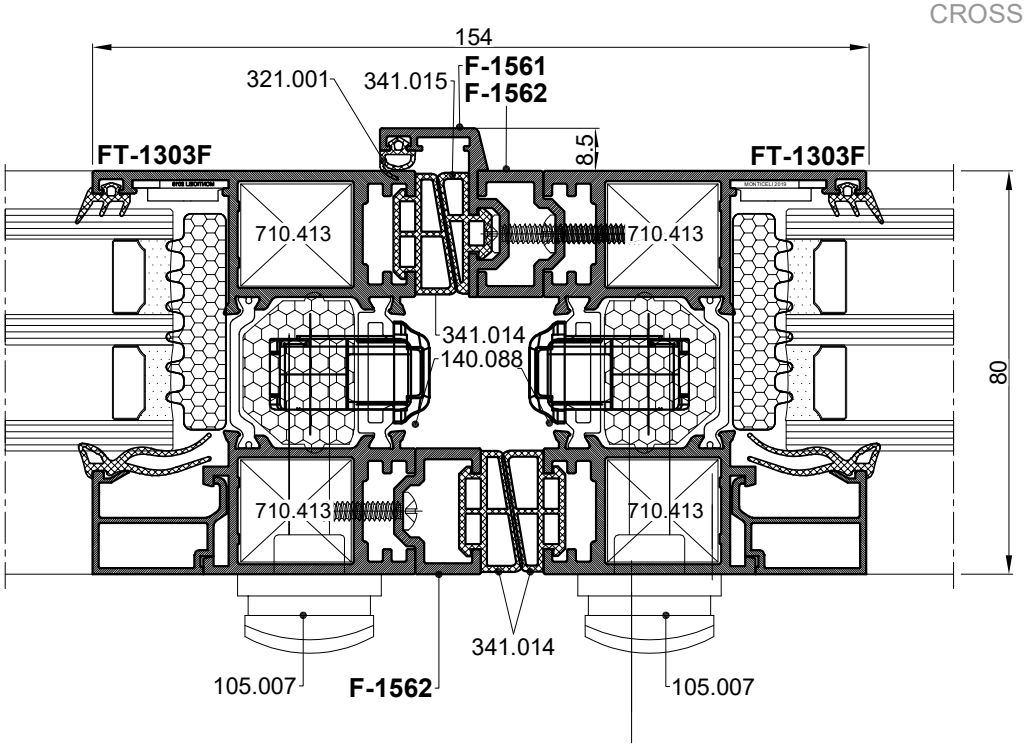

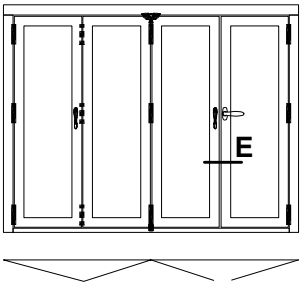

PRESJEK E
CROSS SECTION E

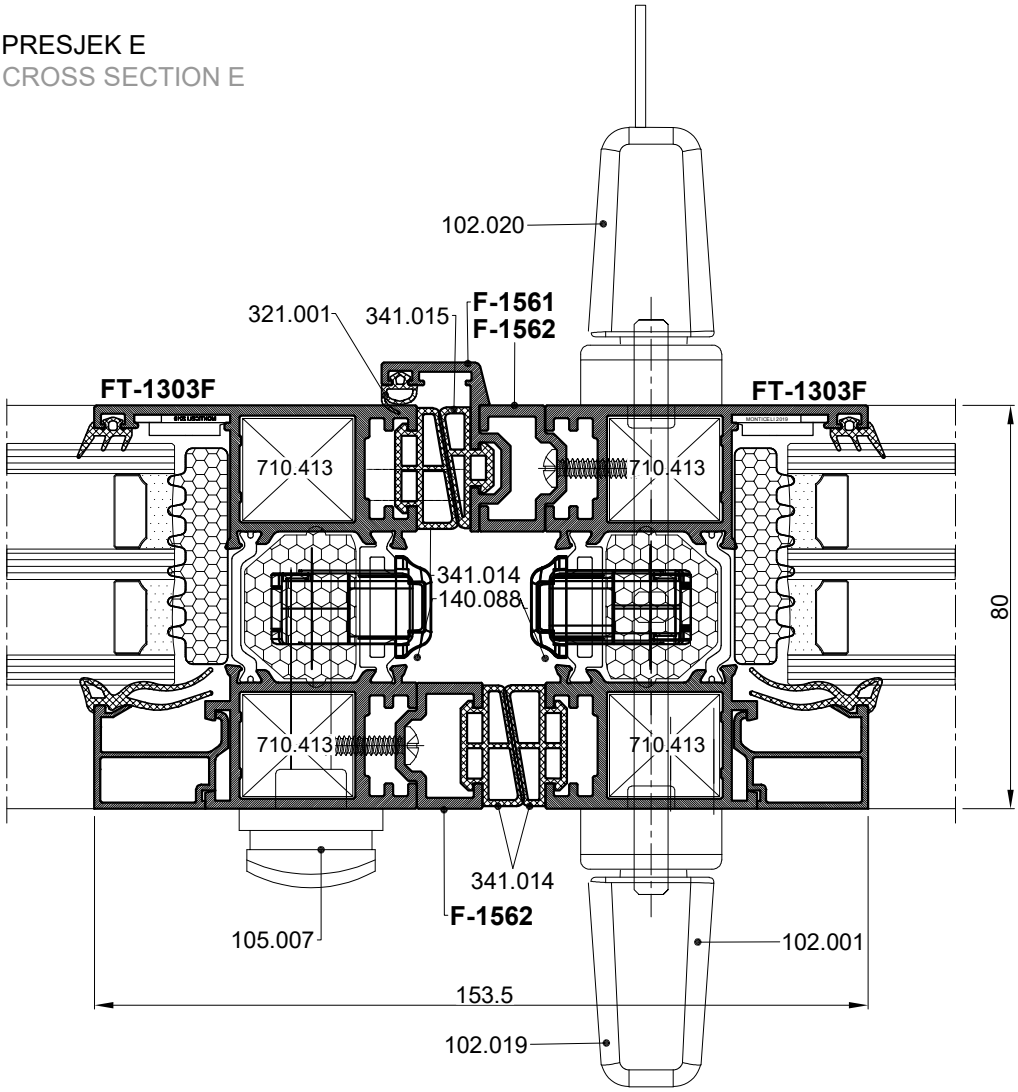

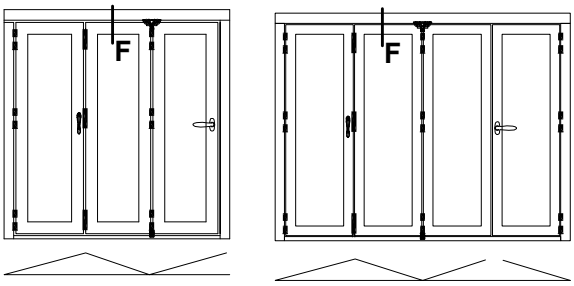

HARMO OTVARANJE
FOLDING OPENING

PRESJEK F
CROSS SECTION F

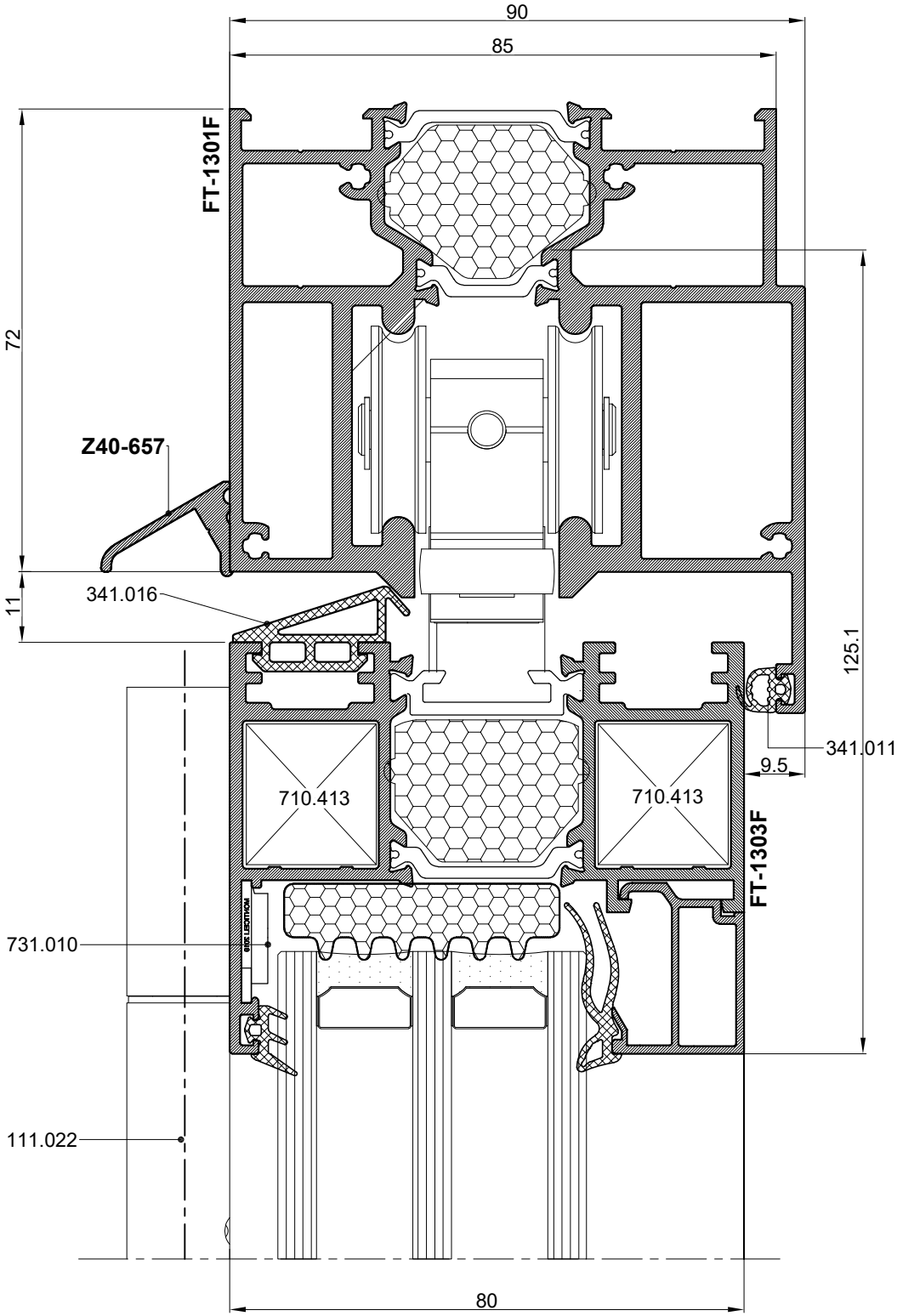

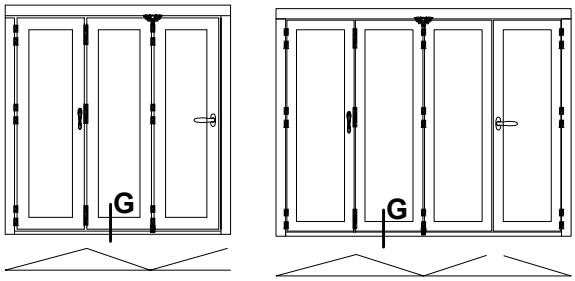

HARMO OTVARANJE
FOLDING OPENING

PRESJEK G
CROSS SECTION G

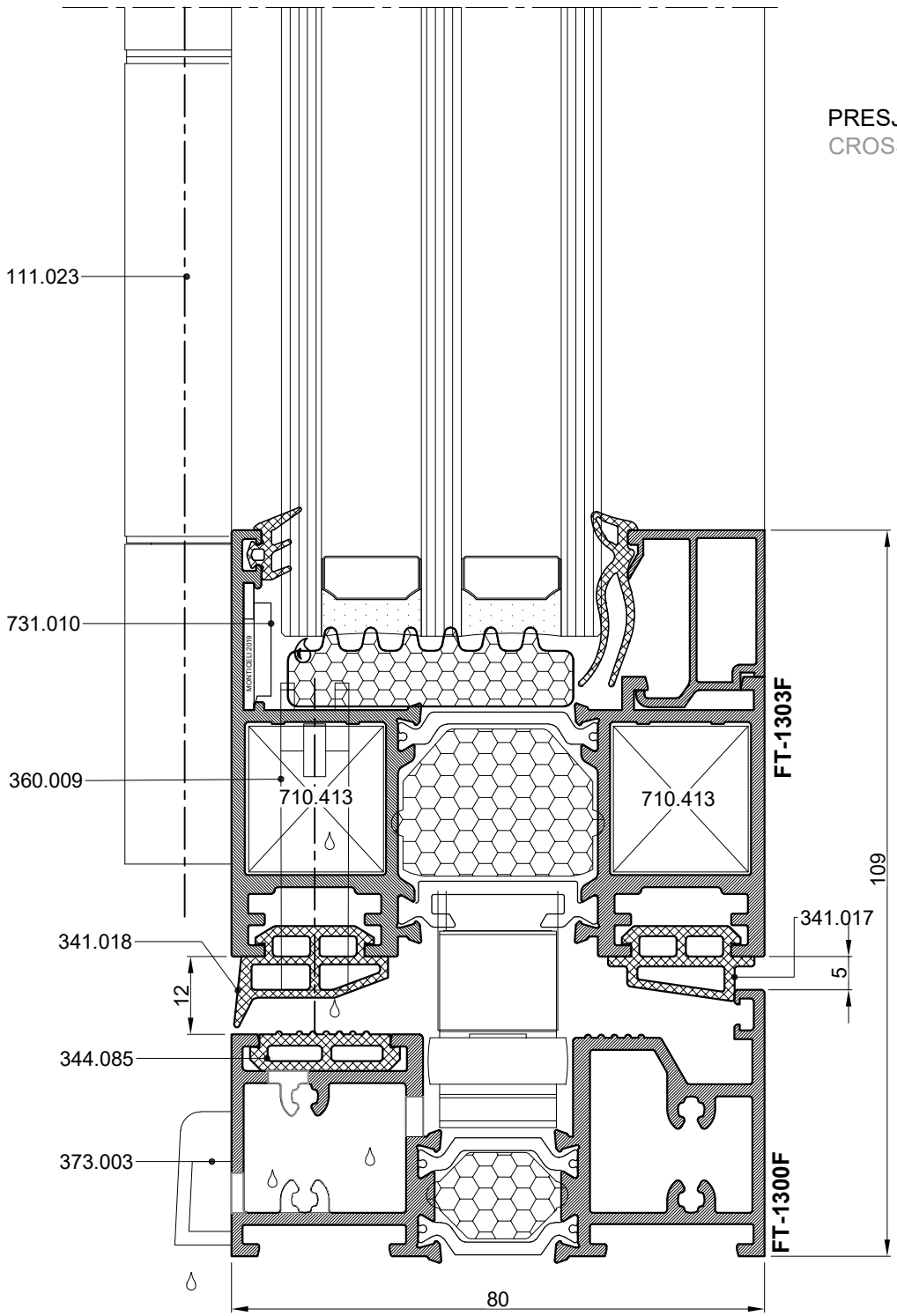

Detalj ugradnje prema RAL ugradnji
Installation detail according to RAL installation

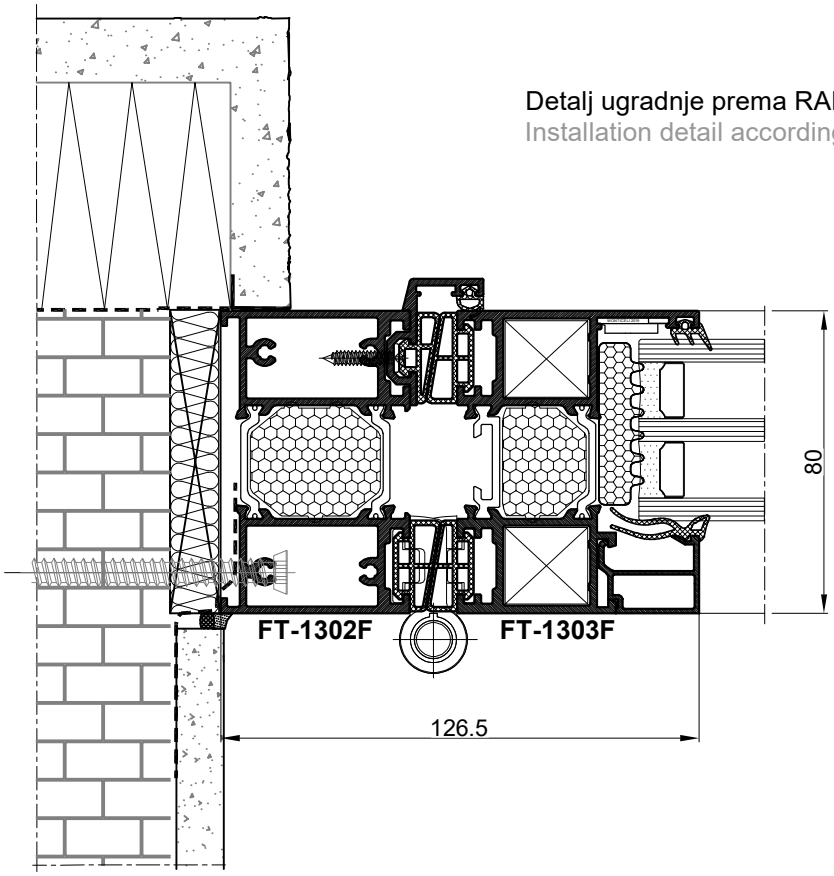

Ugradnja sa prilagodnim profilom
Installation with a custom profile

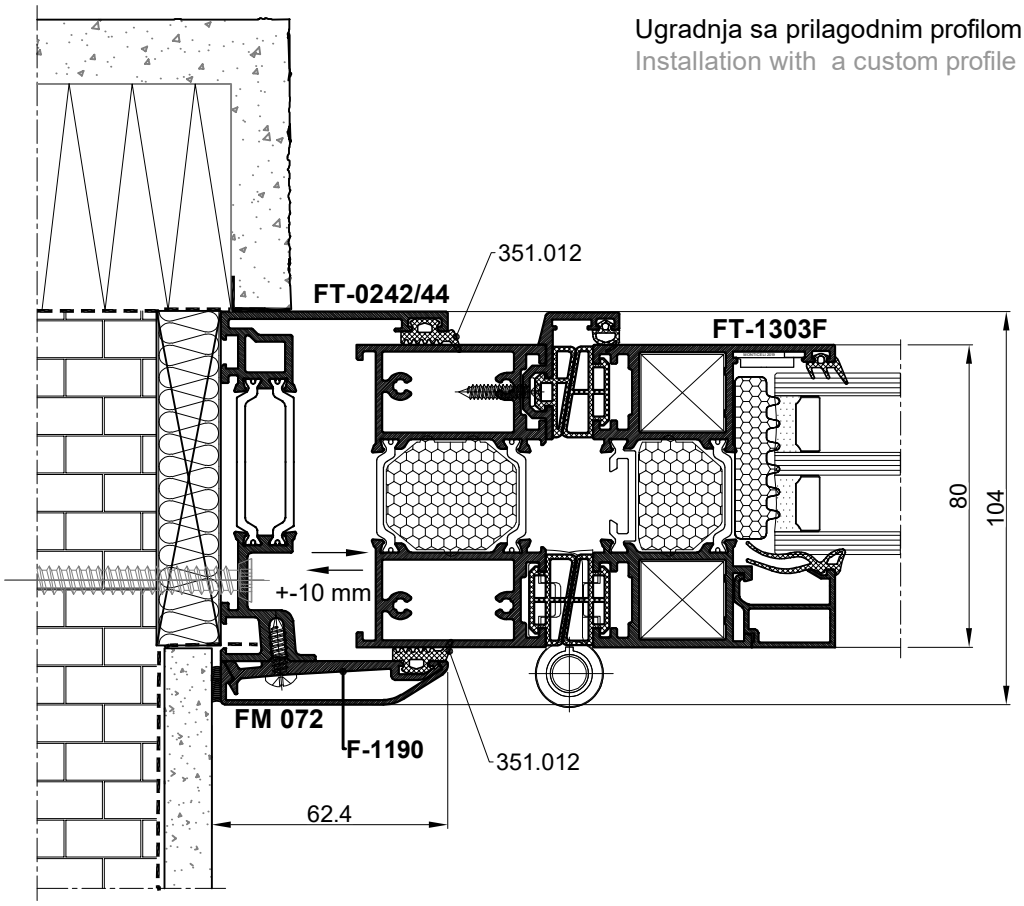

Detalj ugradnje prema RAL ugradnji
Installation detail according to RAL installation

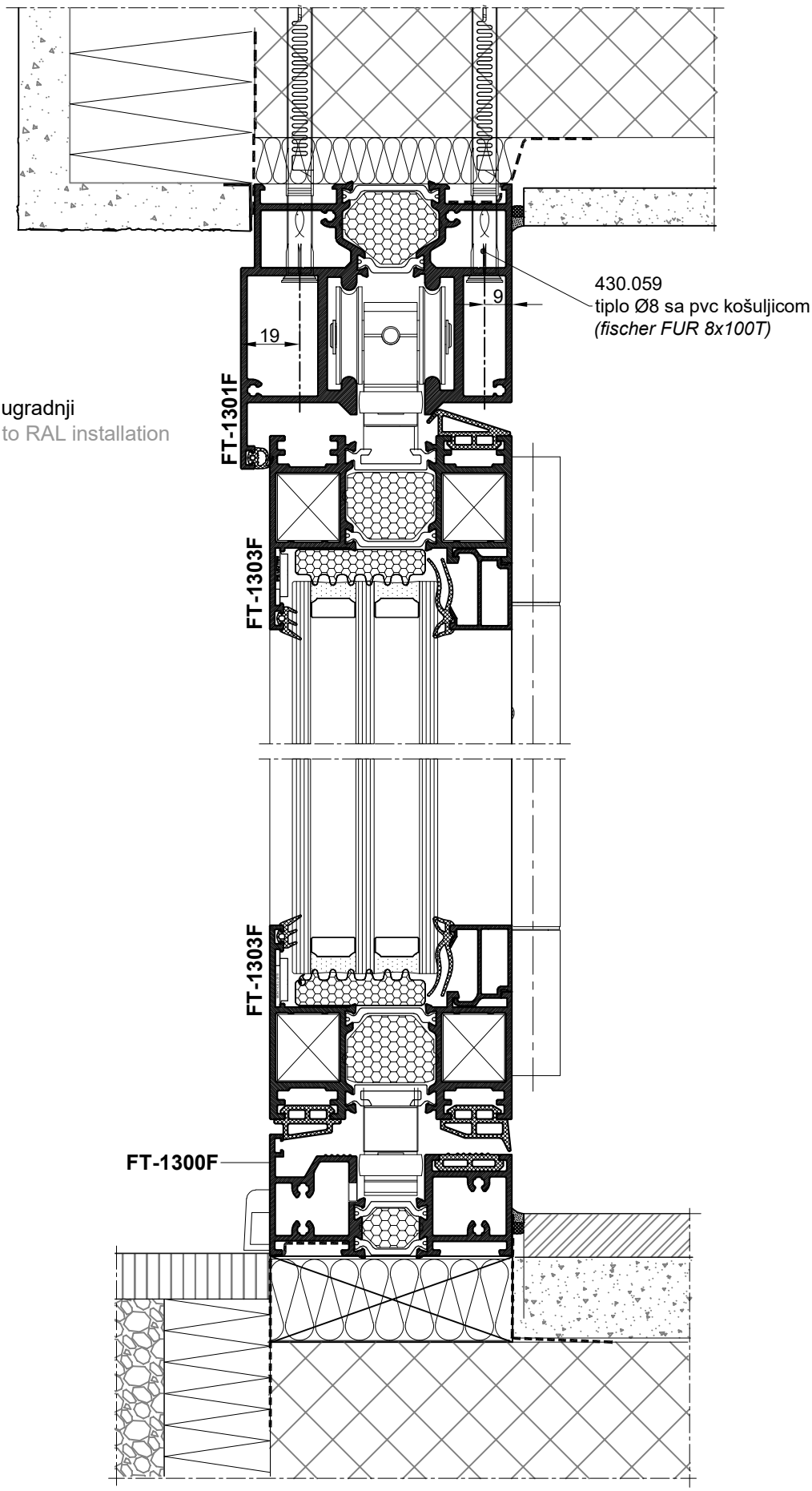

DETALJ FIKSIRANJA GORNJE VODILICE RAMA FT-1301 NA GRAĐEVINSKI ZID
DETALJ FIKSIRANJA GORNJE VODILICE RAMA FT-1301 NA GRAĐEVINSKI ZID

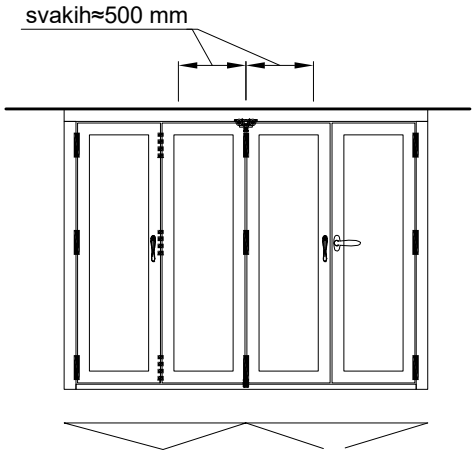

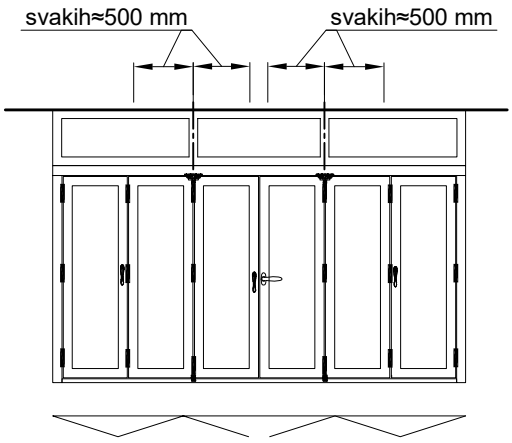

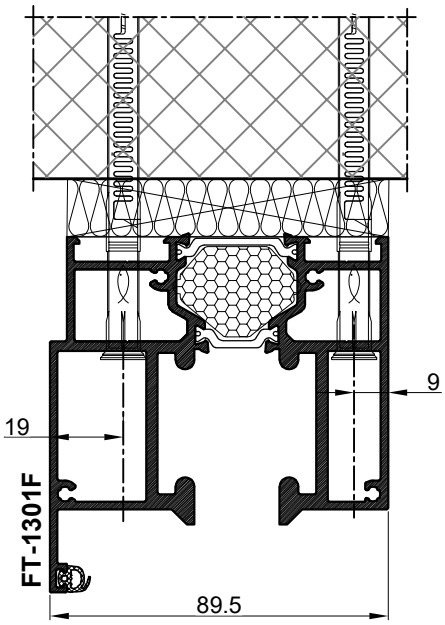

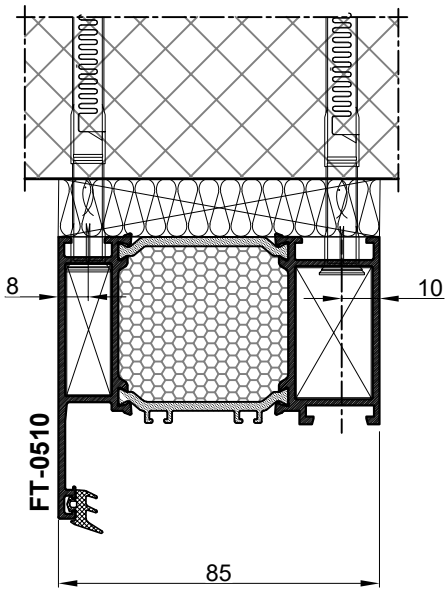

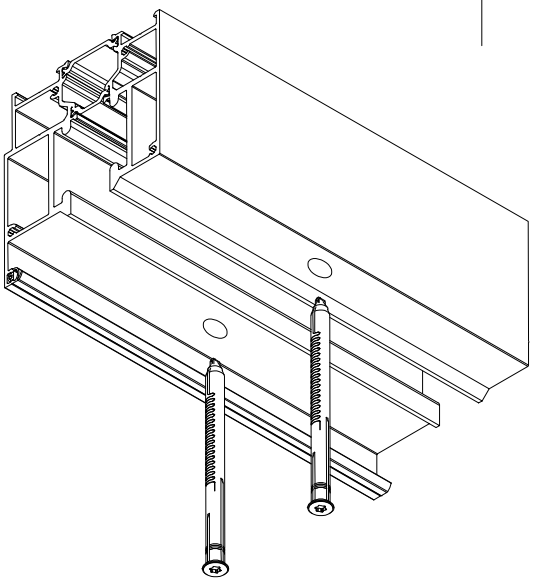

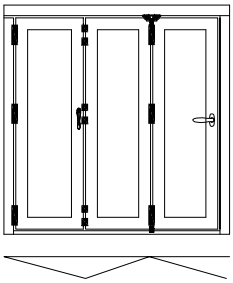

-KRILA JEDNAKE ŠIRINE 3+0
-Lkr=L/3 - 54
-SASH OF EQUAL WIDTH 3+0
-Lkr=L/3 - 54

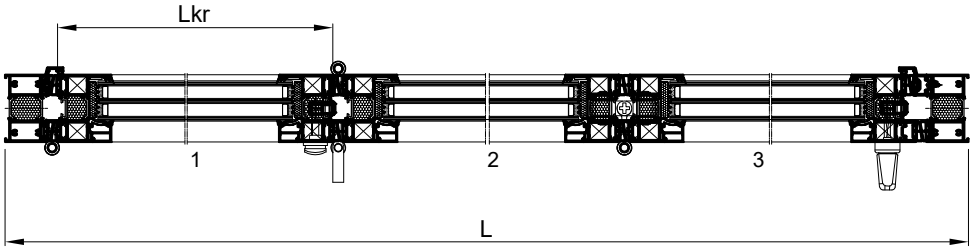

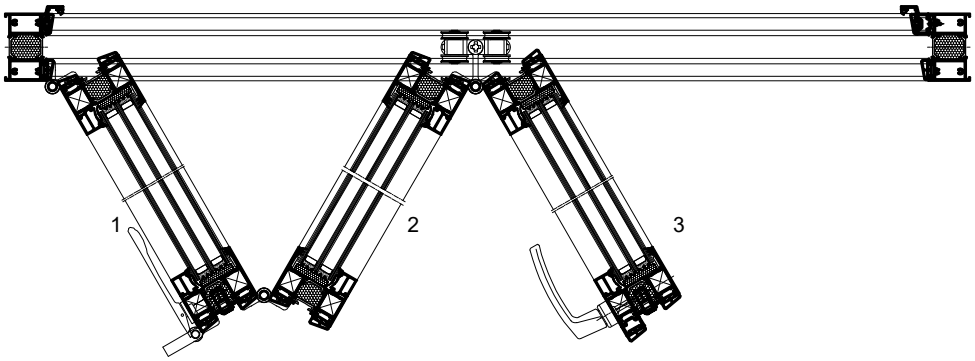

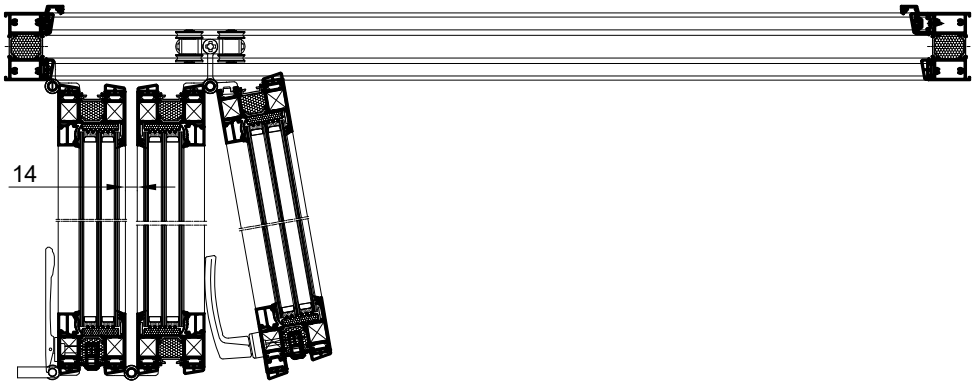

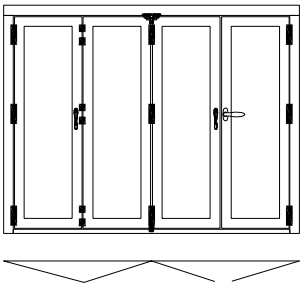

-KRILA JEDNAKE ŠIRINE 3+1
-Lkr=L/4 - 44
-SASH OF EQUAL WIDTH 3+1
-Lkr=L/4 - 56

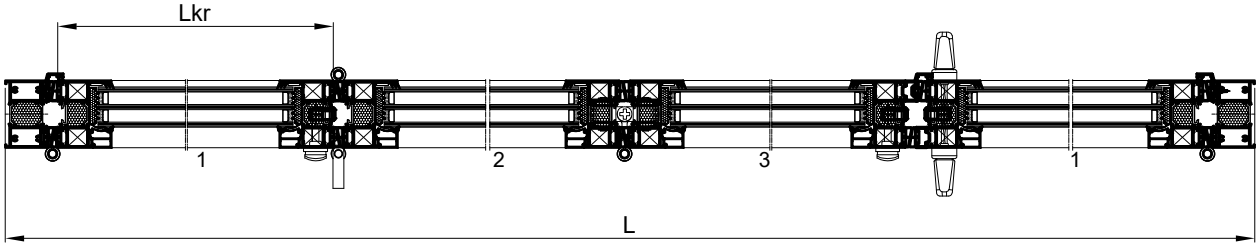

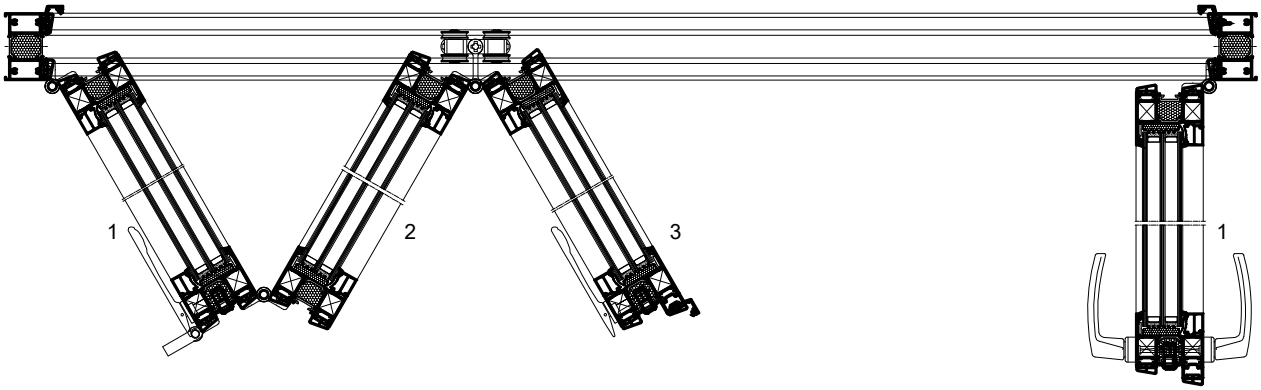

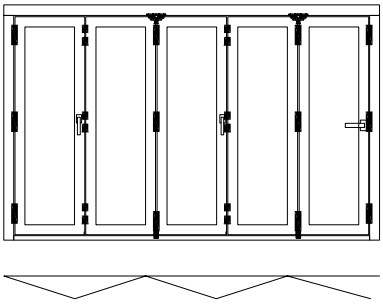

-KRILA JEDNAKE ŠIRINE 5+0
-Lkr= L/5 - 37.5
-SASH OF EQUAL WIDTH 5+0
-Lkr= L/5 - 37.5

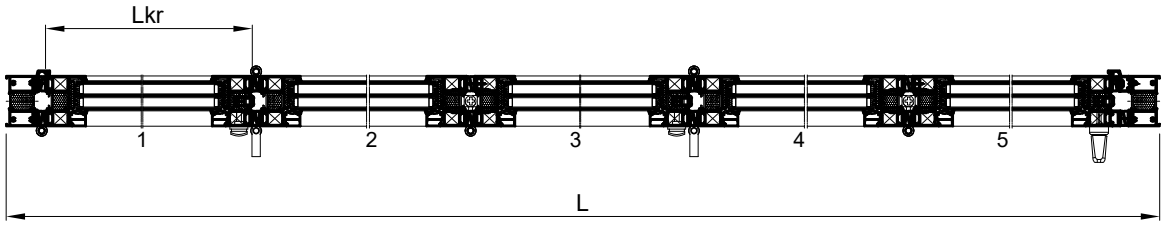

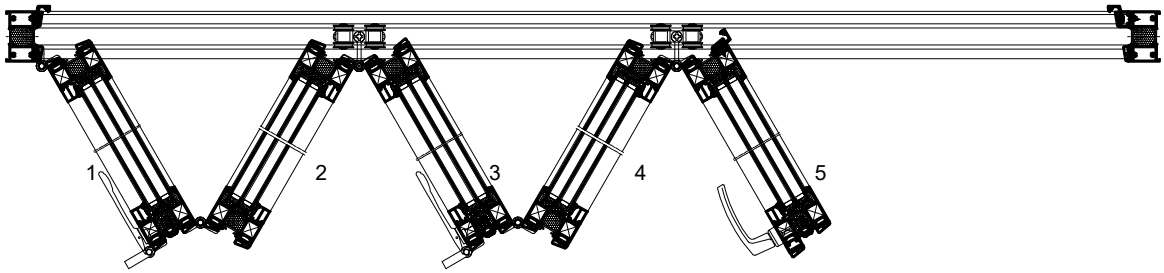

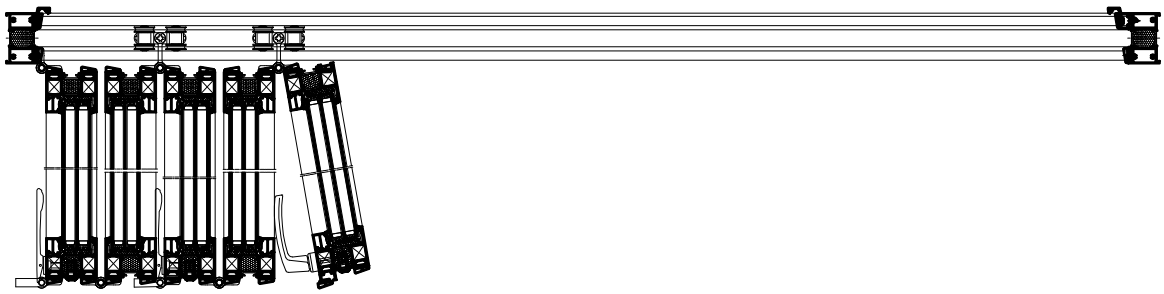

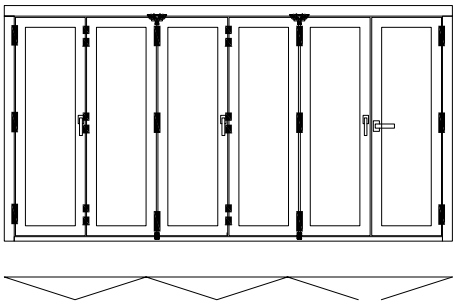

-KRILA JEDNAKE ŠIRINE 5+1
-Lkr=L/6 - 33.5
-SASH OF EQUAL WIDTH 5+1
-Lkr= L/6 - 33.5

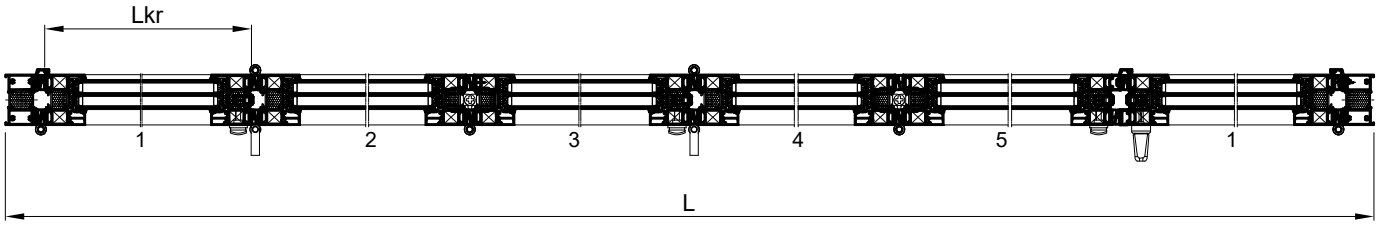

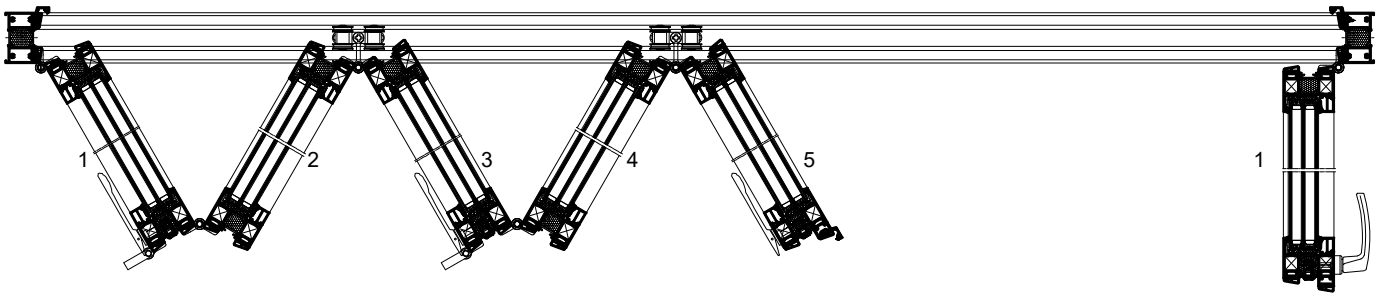

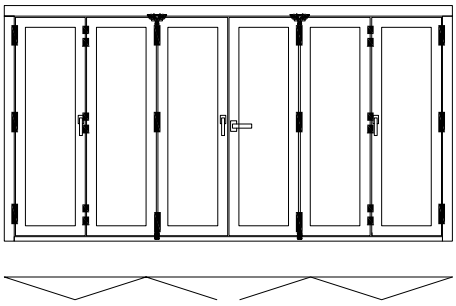

-KRILA JEDNAKE ŠIRINE 3+3
-Lkr=L/6 - 33.5
-SASH OF EQUAL WIDTH 3+3
-Lkr= L/6 - 33.5

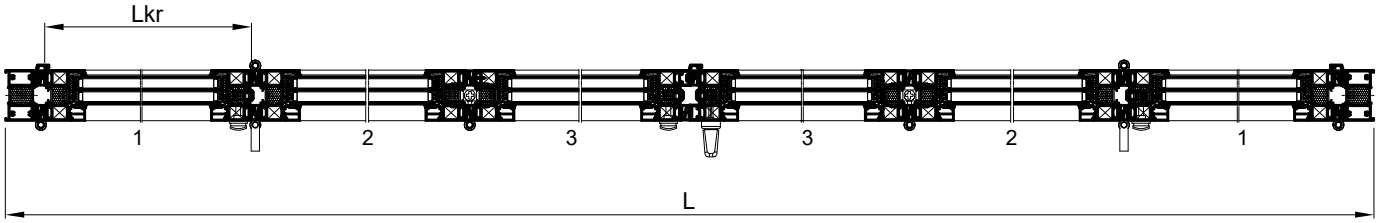

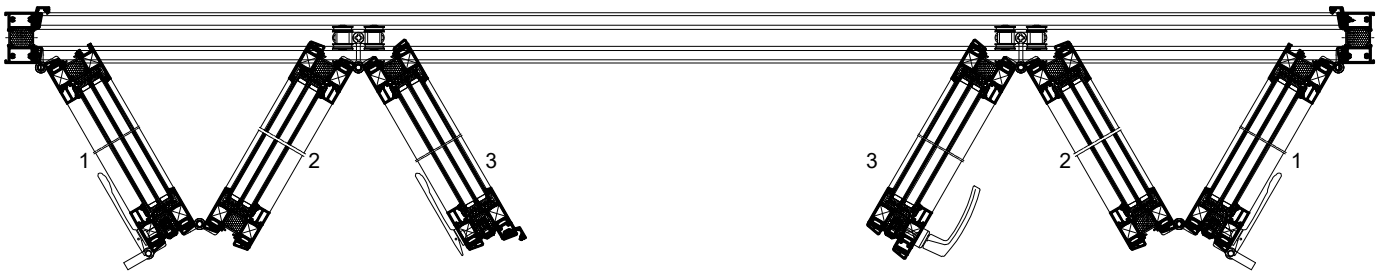

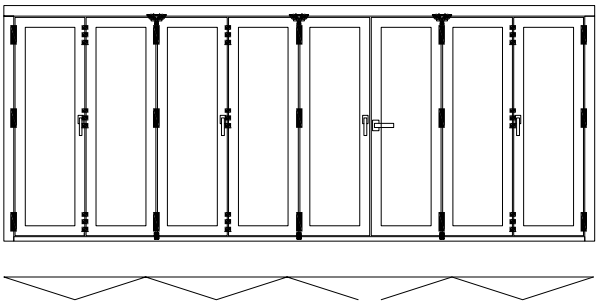

-KRILA JEDNAKE ŠIRINE 5+3
-Lkr=L/8 - 28
-SASH OF EQUAL WIDTH 5+3
-Lkr= L/8 - 28

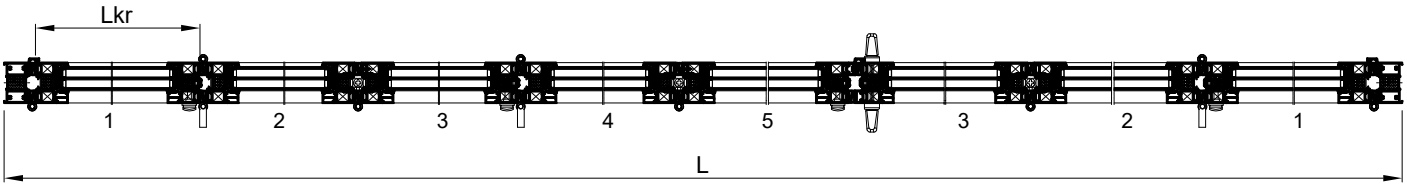

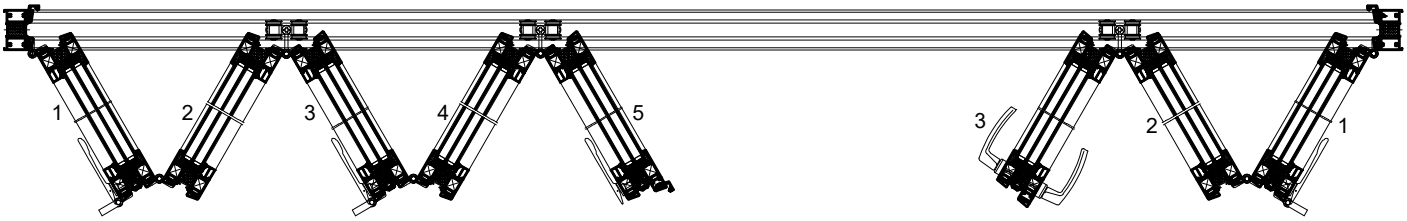

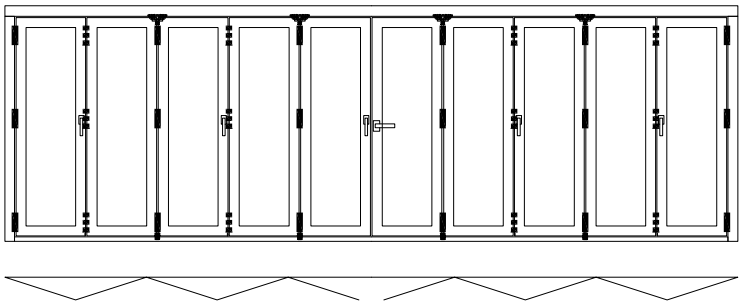

-KRILA JEDNAKE ŠIRINE 5+5
-Lkr=L/10 - 25
-SASH OF EQUAL WIDTH 5+5
-Lkr= L/10 - 25

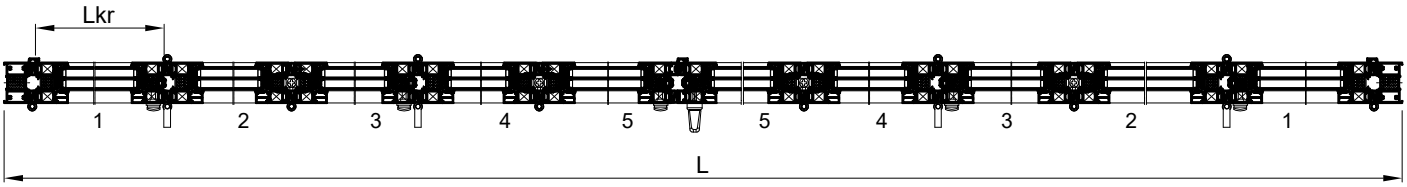

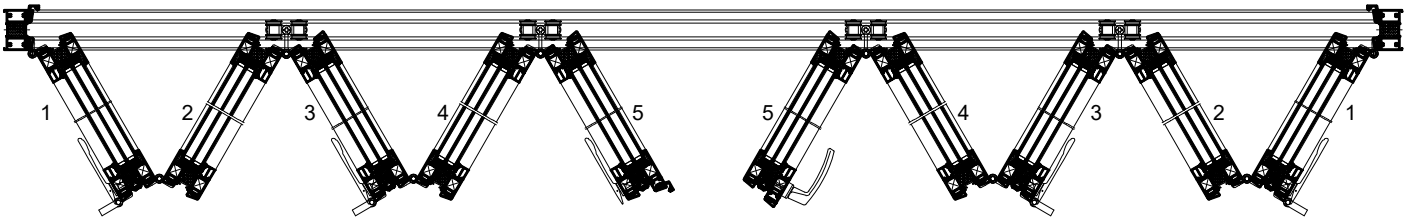

Obrada i montaža
Processing and montage

MJERE PILANJA PROFILA OKVIRA RAMA
-PROFILI SE PILAJU POD 90°
-L(FT-1300) = L-90
-L(FT-1301) = L-7
-L(FT-1302) = H-72 (kom 2)

CUTTING MEASURES PROFILE FRAME
-CUTTING PROFILES AT AN ANGLE 90°
-L(FT-1300) = L-90
-L(FT-1301) = L-7
-L(FT-1302) = H-72 (pcs 2)

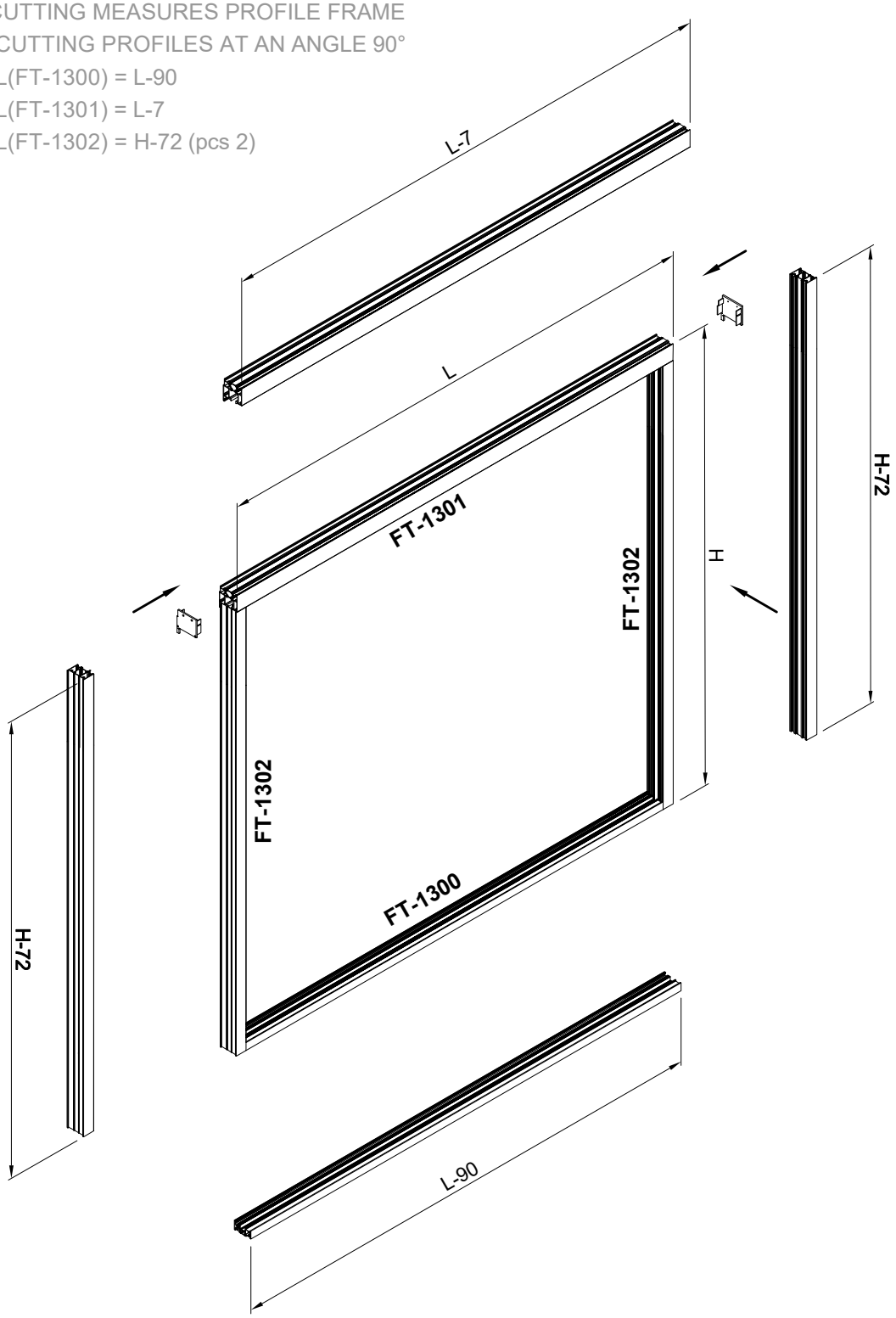

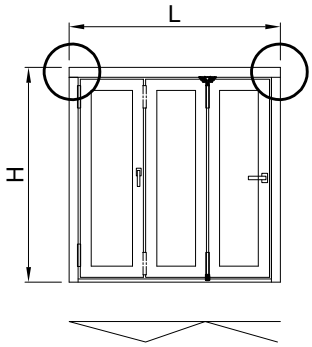

SPAJANJE OKVIRA RAMA
CONNECT FRAME WITH SCREW

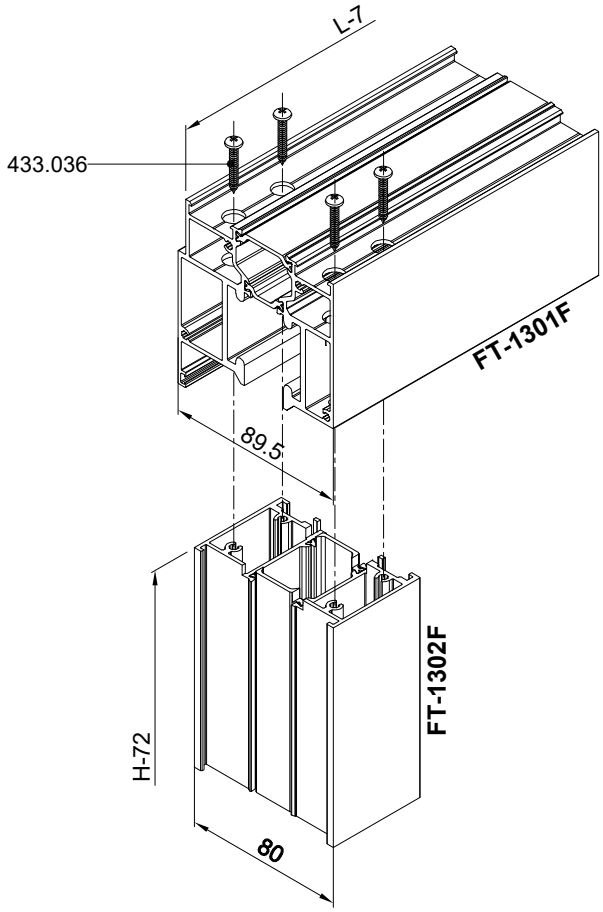

-spajanje vijcima 433.036
(4.2 x 45, DIN 7981)
-screw connection 433.036
(4.2 x 45, DIN 7981)

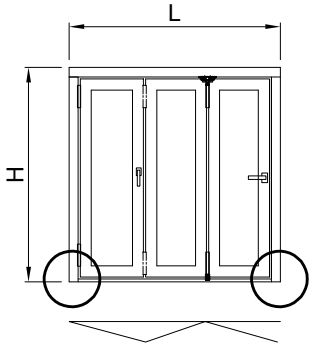

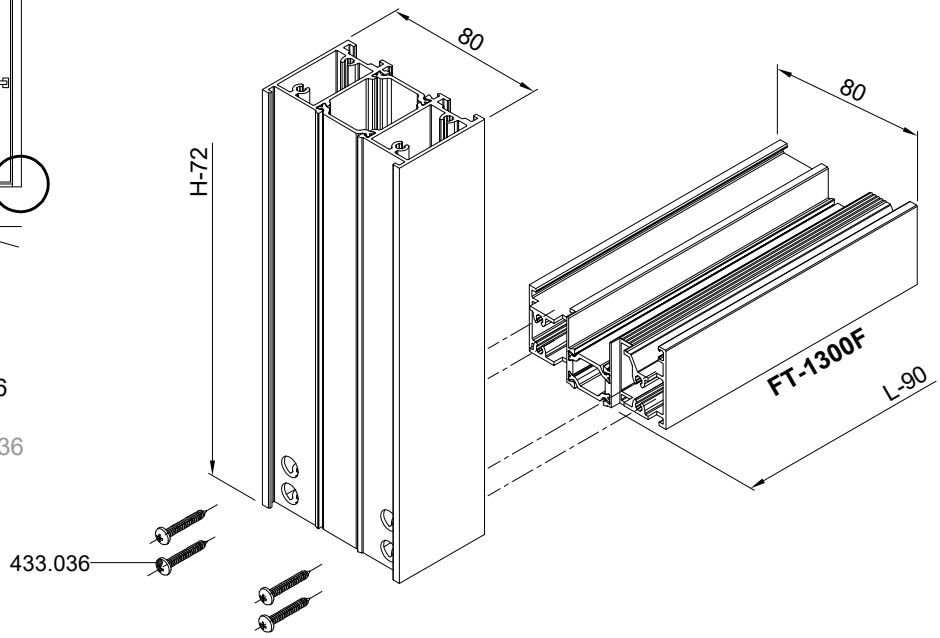

-spajanje vijcima 433.036
(4.2 x 45, DIN 7981)
-screw connection 433.036
(4.2 x 45, DIN 7981)

FT-1302

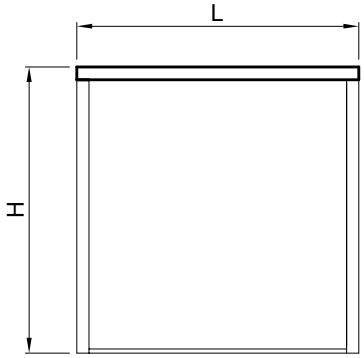

OBRADA PROFILA GORNJE VODILICE **FT-1301F**
-Mjera pilanja L(FT-1301F) = L-7
-Obrada na krajevima profila za spajanje vijcima
-Simetrična obrada

PROCCESING ON PROFILE FOR UPPER GUIDE **FT-1301F**
-Cutting measure L(FT-1301F) = L-7
-Proccesing on the end of profile for screw connection
-Simetrical proccesing

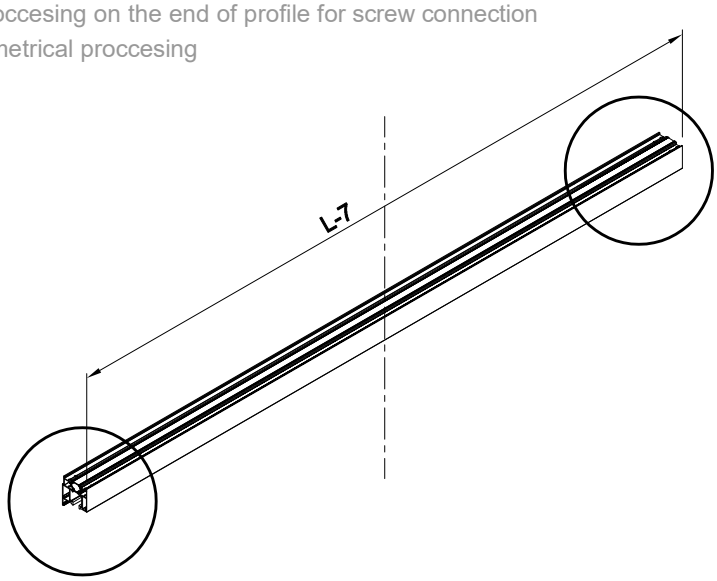

OBRADA PROFILA
PROCESSING PROFILE

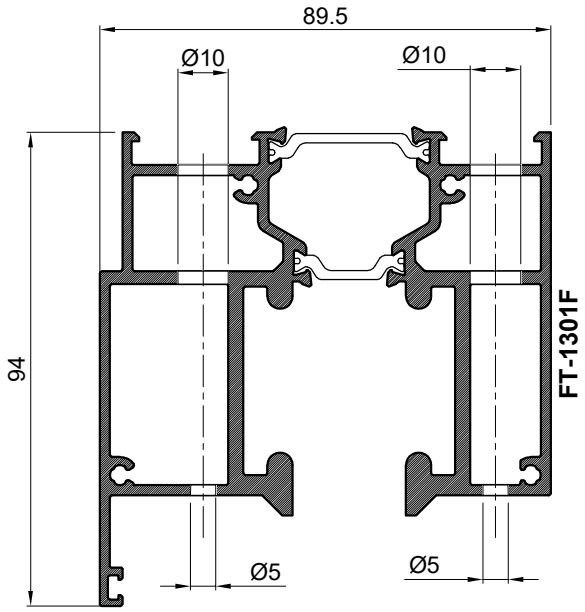

PRESJEK
SECTION

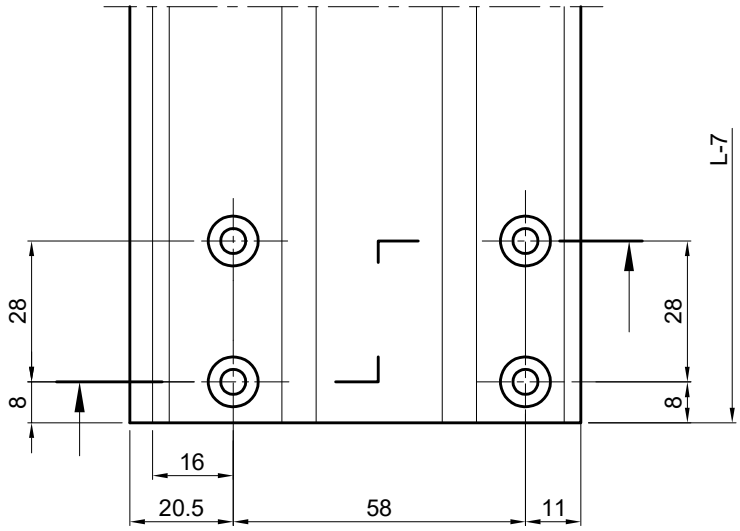

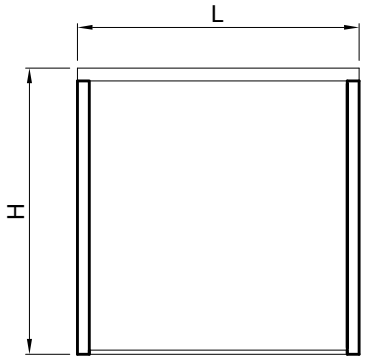

OBRADA PROFILA OKOMICE OKVIRA RAMA **FT-1302F**
-Mjera pilanja H(FT-1302F) = H-72
PROCCESING ON MULLION FRAME PROFILE **FT-1302F**
-Cutting measure H(FT-1302F) = H-72

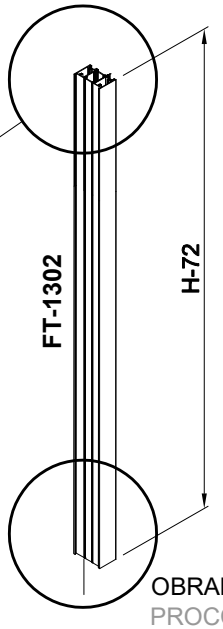

OBRADA PROFILA
PROCCESING PROFILE

OBRADA PROCESING FT-1302F
-obrada vretenastim glodalom
-processing with end mill

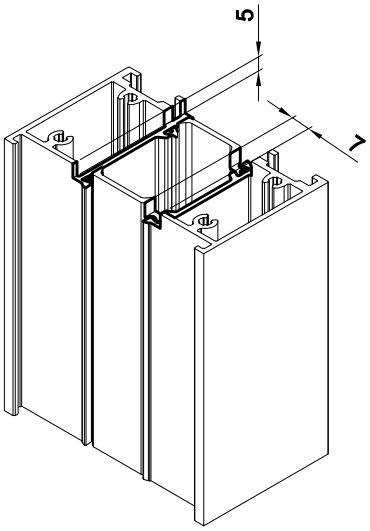

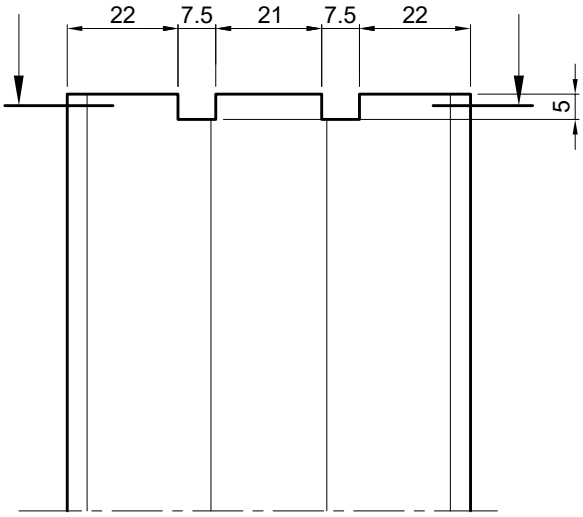

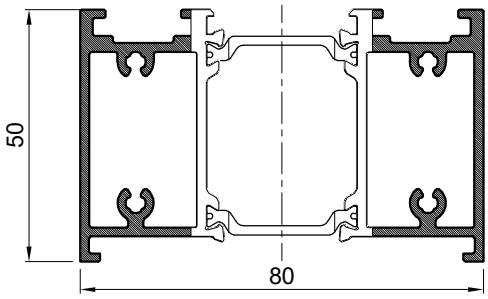

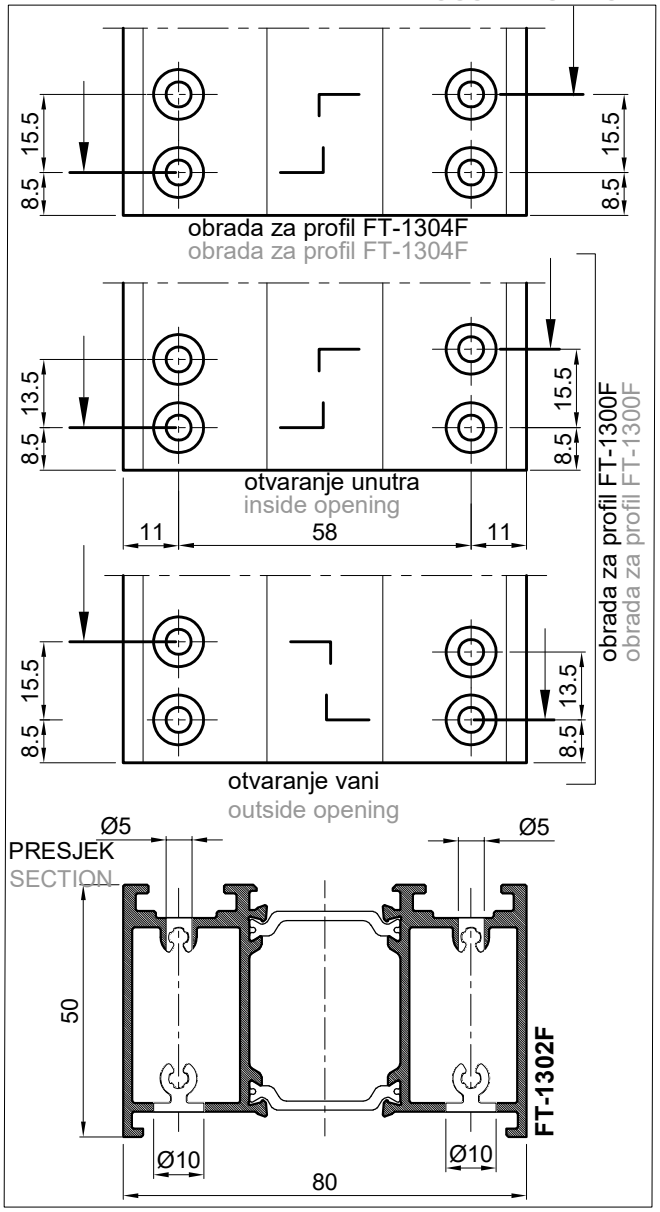

- OBRADA PROFILA DONJE VODILICE **FT-1300F i FT-1304F**
- Mjera pilanja L(FT-1300F) = L-90
- Obrada na krajevima profila (simetrična obrada)
- Obrada snopom glodala 220.029
- PROCCESING ON PROFILE FOR LOWER GUIDE **FT-1300F and FT-1304F**
- Cutting measure L(FT-1300F) = L-90
- Processing at the ends of the profile(simetrical proccesing)
- Processing milling cutters 220.029

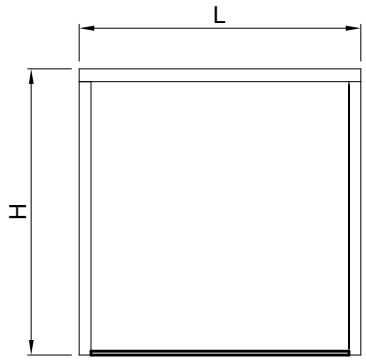

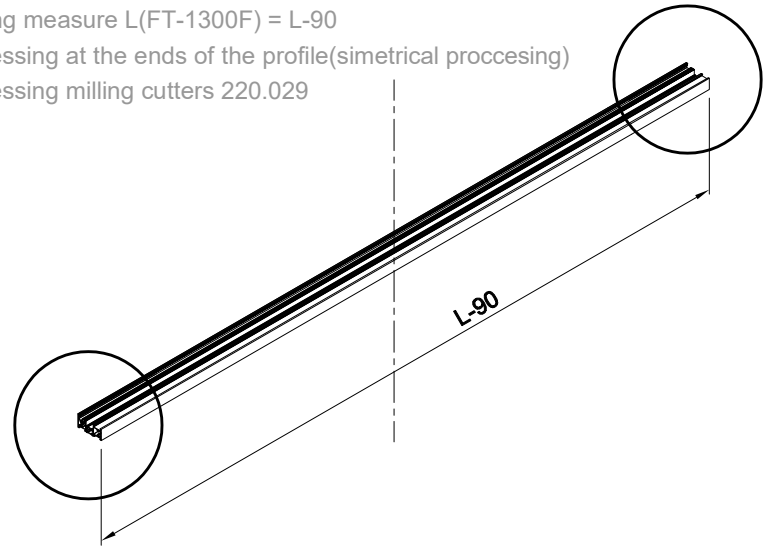

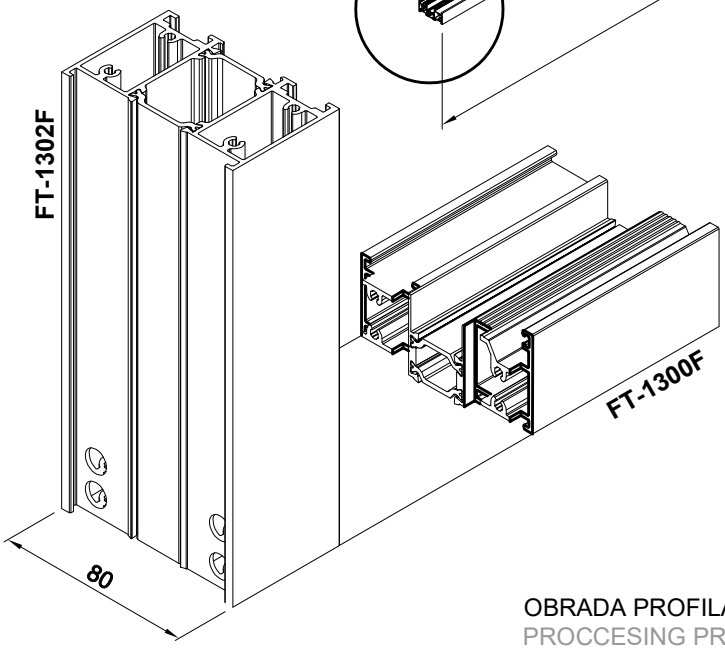

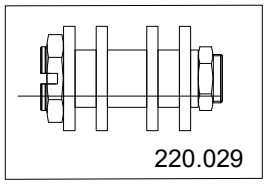

OBRADA PROFILA **FT-1300F i FT-1304F**
PROCCESING PROFILE **FT-1300F and FT-1304F**

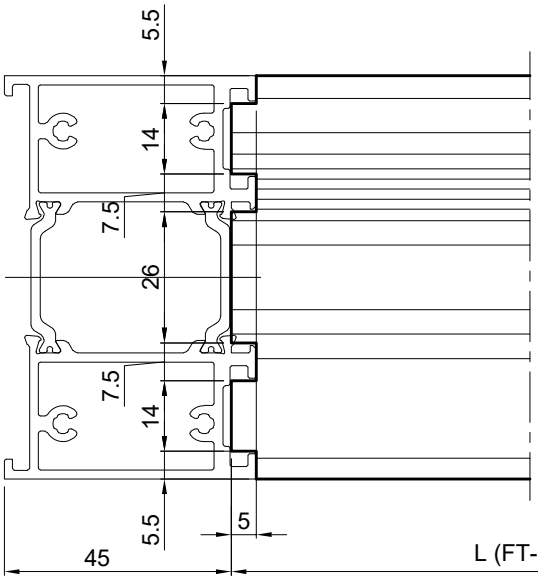

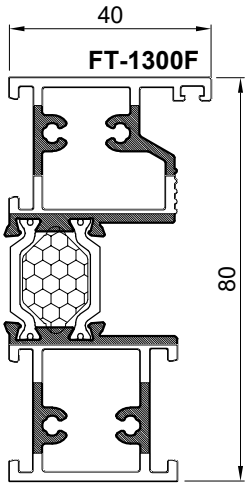

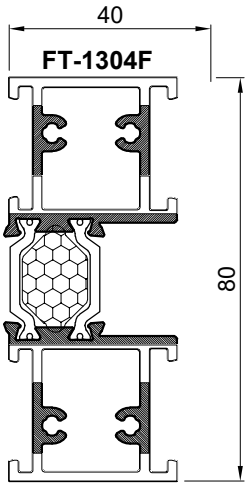

OBRADA PROFILA FT-1300F i FT-1304F je identična

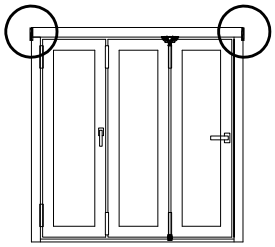

UGRADNJA UMETKA U PROFIL FT-1301F

-Pilanje FT-1301 pod 90°

-Materijal umetka: Zamak

-Ugradnja umetka vijcima 4.2x22(DIN 7981)

MONTAGE INSERT INTO PROFILE FT-1301F

-Cutting FT-1301 at angle 90°

-Material insert: Zamak

-Insert with screw 4.2x22(DIN 7981)

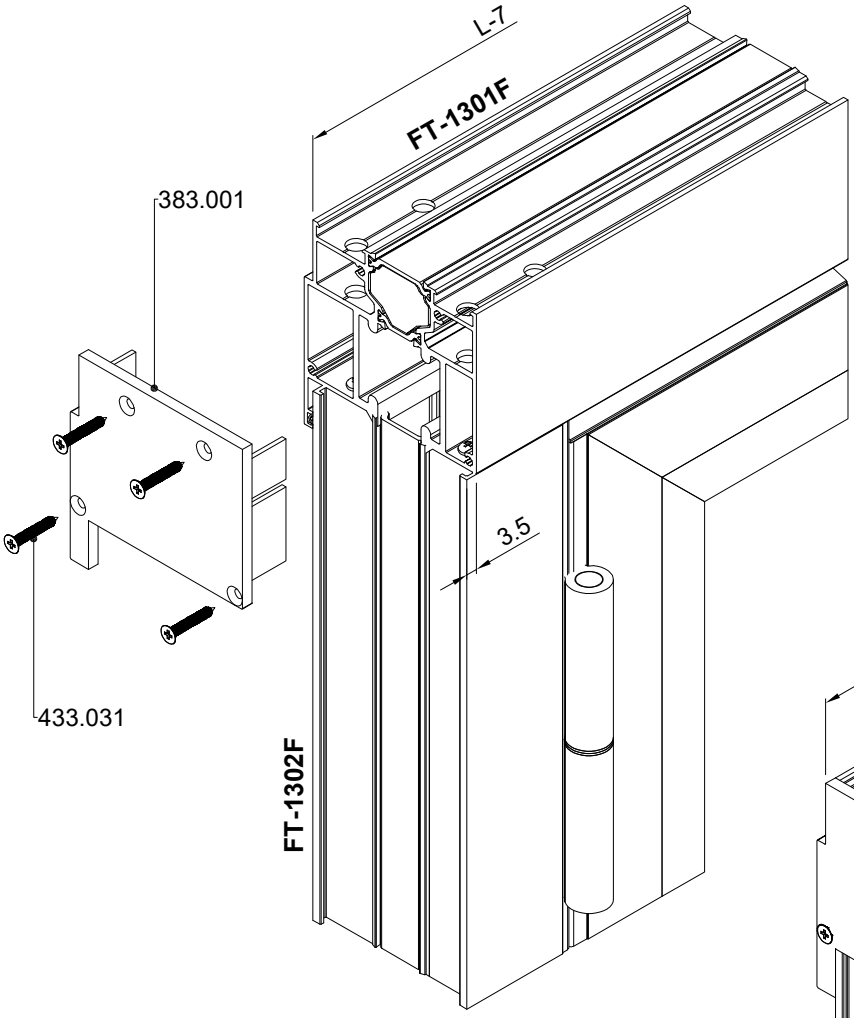

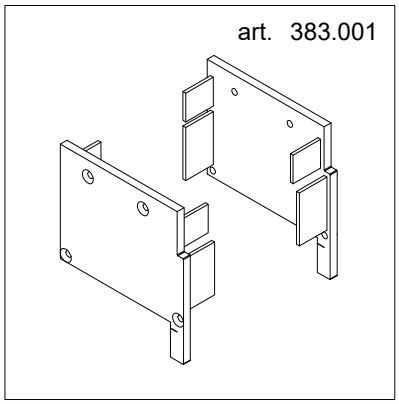

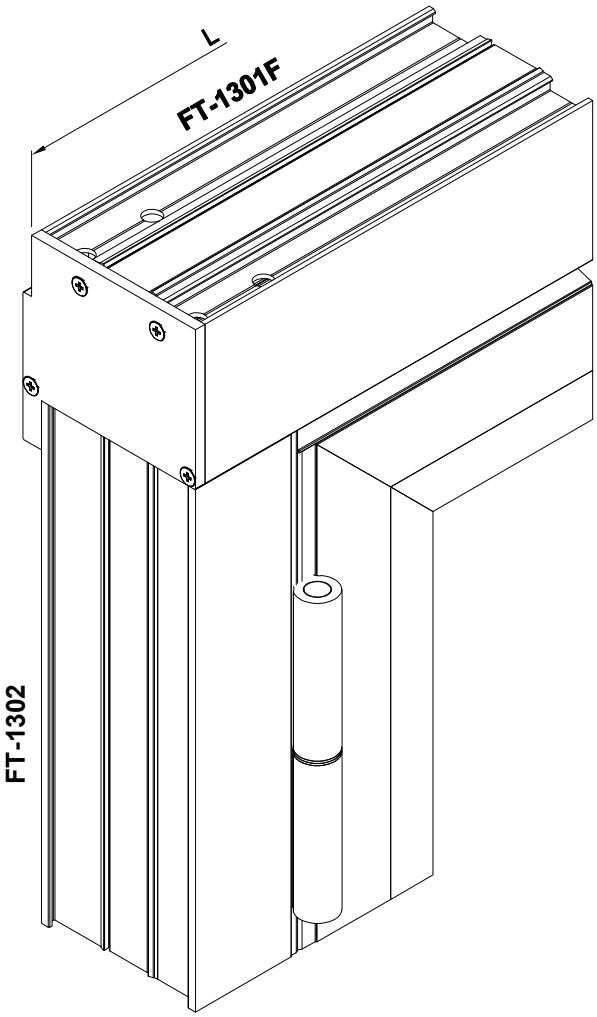

SPAJANJE PROFILA KRILA **FT-1303F** KUTNICIMA 710.413 i 731.010
CONNECTING SASH PROFILE **FT-1303F** WITH CORNER BRACKETS 710.413 i 731.010

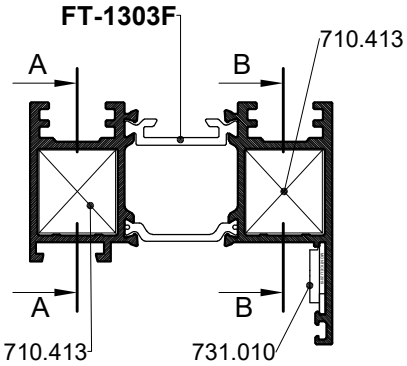

PRESJEK C-C
SECTION C-C

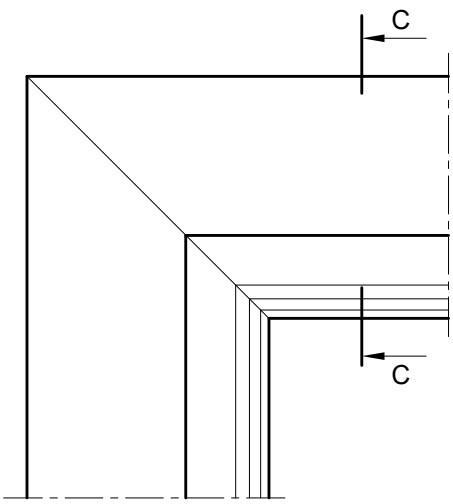

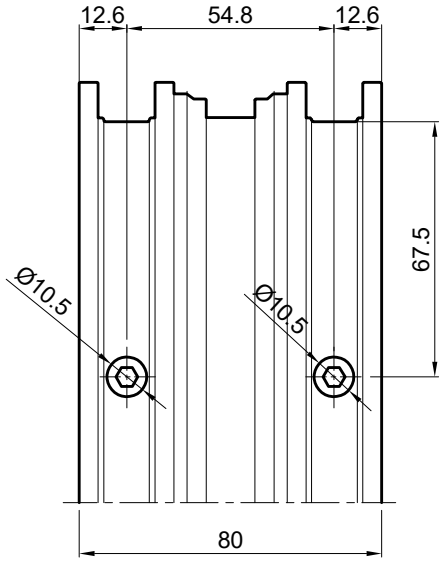

Spajanje kutnikom 710.413
(vijcima M8x13 *-tip Feal)*
Cor. brac. connection 710.413
(screws M8x13 *-type Feal)*

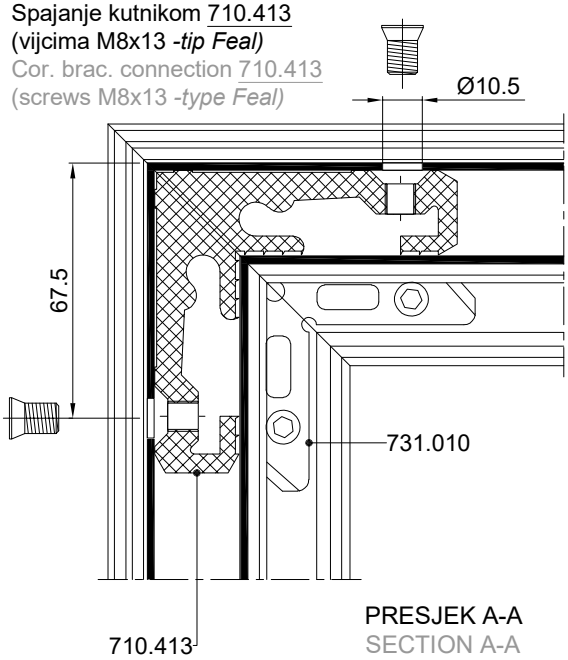

PRESJEK A-A
SECTION A-A

Spajanje kutnikom 710.413
(vijcima M8x13 *-tip Feal)*
Cor. brac. connection 710.413
(screws M8x13 *-type Feal)*

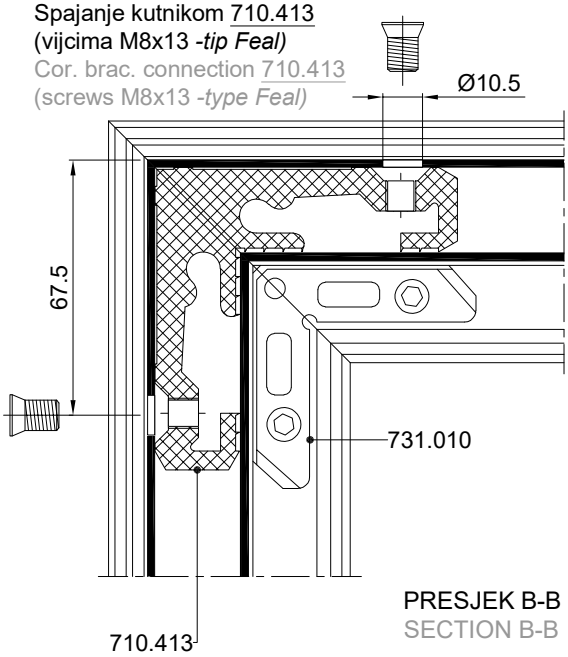

PRESJEK B-B
SECTION B-B

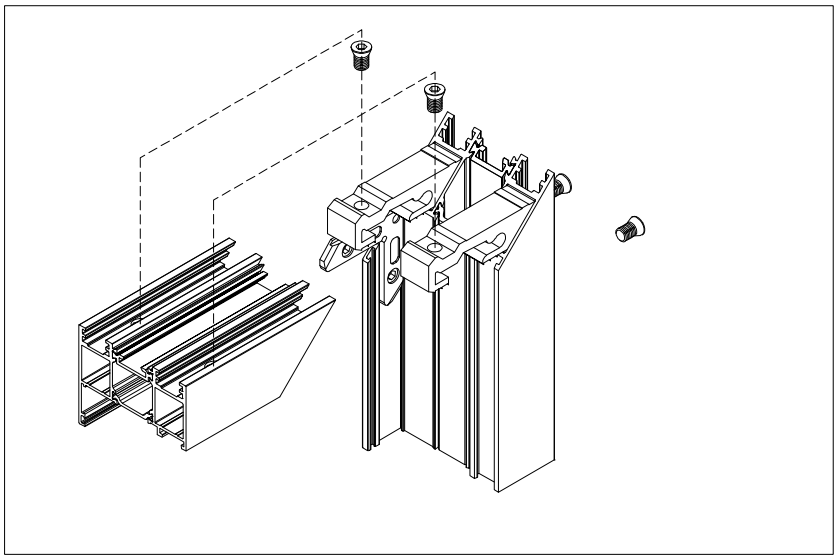

SPAJANJE PROFILA KRILA **FT-1303F** KUTNICIMA 710.422 i 731.010
CONNECTING SASH PROFILE **FT-1303F** WITH CORNER BRACKETS **710.422** i **731.010**

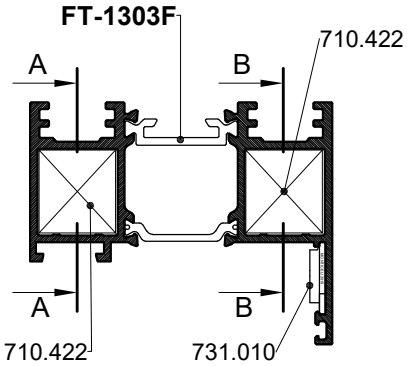

PRESJEK C-C
SECTION C-C

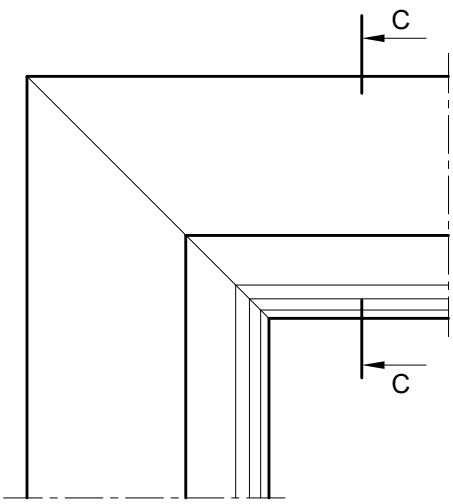

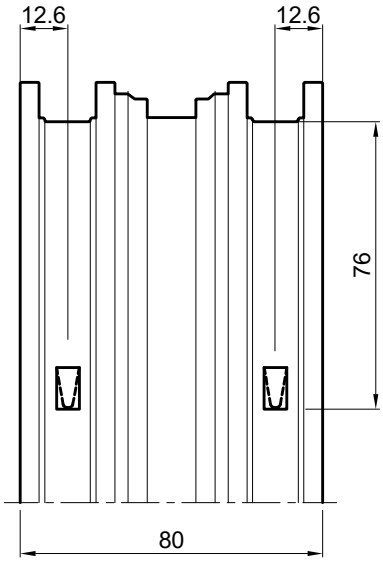

Spajanje kutnikom 710.422
deformacijom stijenke profila prema kutniku
Cor. brac. connection 710.422
al profile corner crimping

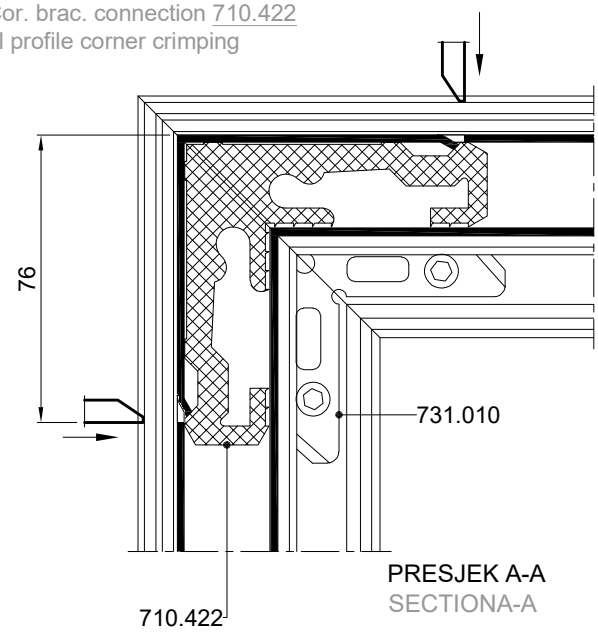

PRESJEK A-A
SECTIONA-A

Spajanje kutnikom 710.422
deformacijom stijenke profila prema kutniku
Cor. brac. connection 710.422
al profile corner crimping

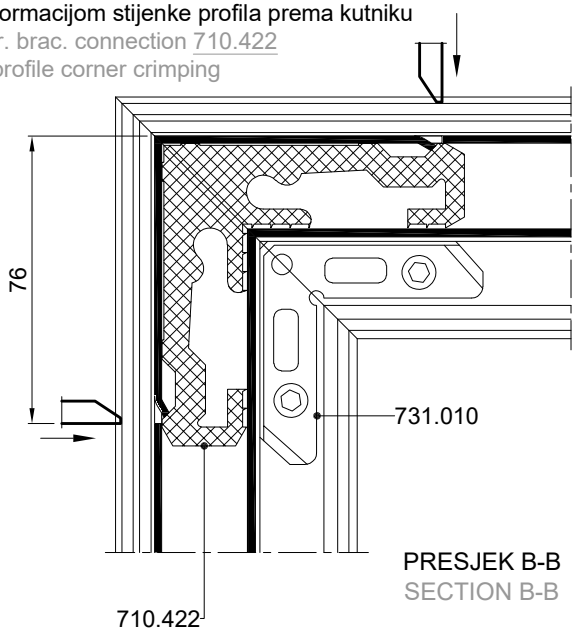

PRESJEK B-B
SECTION B-B

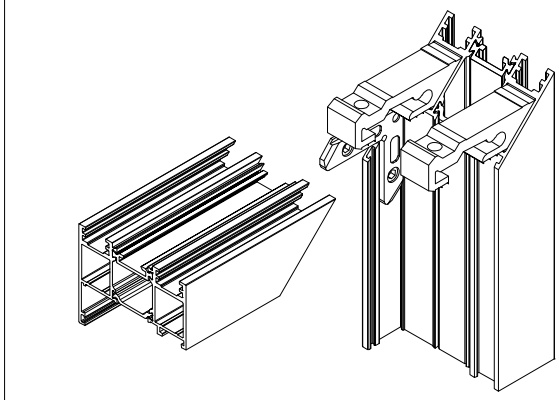

UGRADNJA I OBRADA PROFILA F-1562
-Poz.1 - ugrađuje se u okvir rama na mjestu brave
-Poz.2 - ugrađuje se na krilo na mjestu brave
INSTALLATION AND PROCCESING PROFILE F-1562
-Poz.1 - mounting in the frame profile at the lock position
-Poz.2 - mounting on the frame sash at the lock position

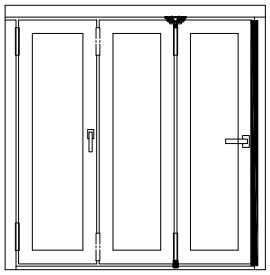

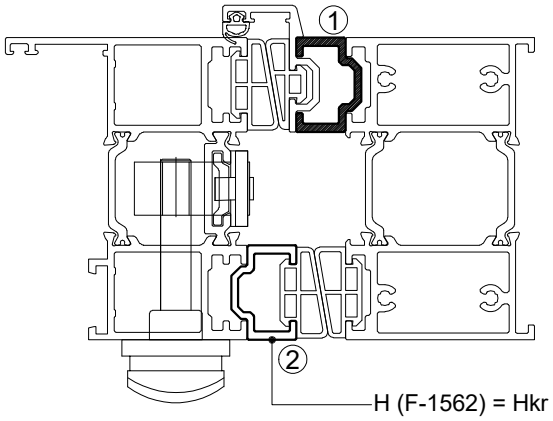

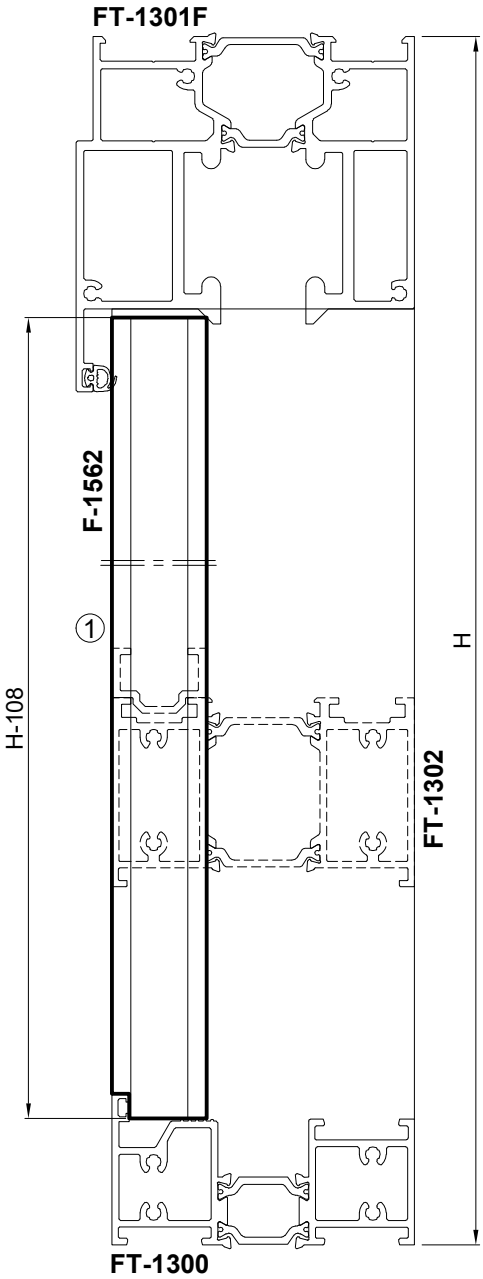

OBRADA PROCESING F-1562
-obrada vretenastim glodalom
-processing with end mill

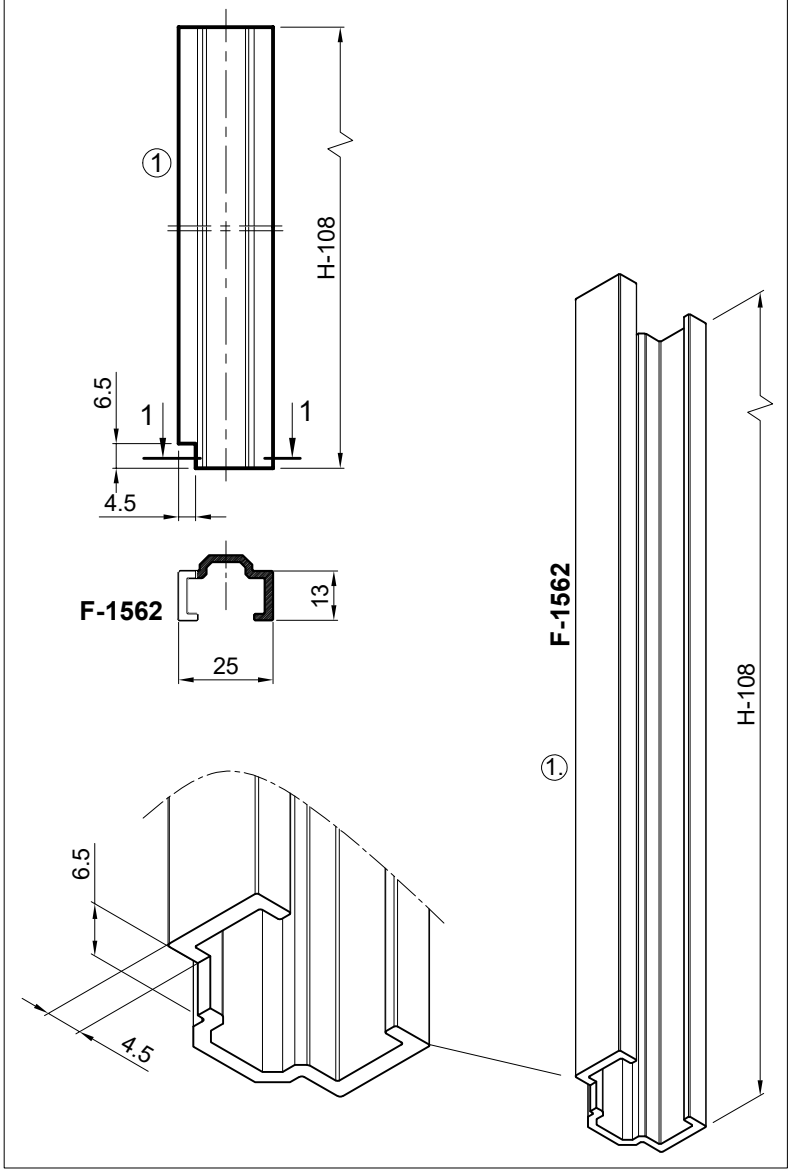

UGRADNJA I OBRADA PROFILA F-1561 i F-1562
-Poz 1. - F-1561- ugrađuje se na okvir rama na mjestu brave
-Poz 2. - F-1562- ugrađuje se na okvir rama na mjestu brave
-Poz 3. - F-1562- ugrađuje se na krilo na mjestu brave
INSTALLATION AND PROCCESING PROFILE F-1561
-Poz 1. - F-1561- mounting on the frame at the lock position
-Poz 2. - F-1562- mounting on the frame at the lock position
-Poz 3. - F-1562- mounting on the sash at the lock position

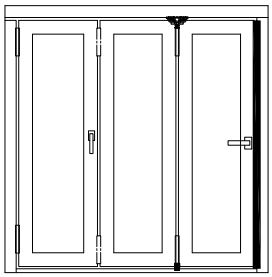

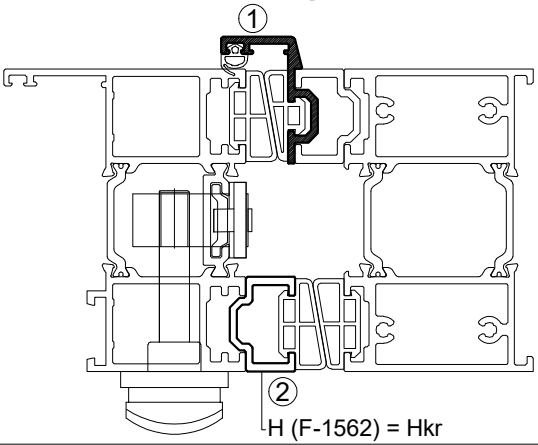

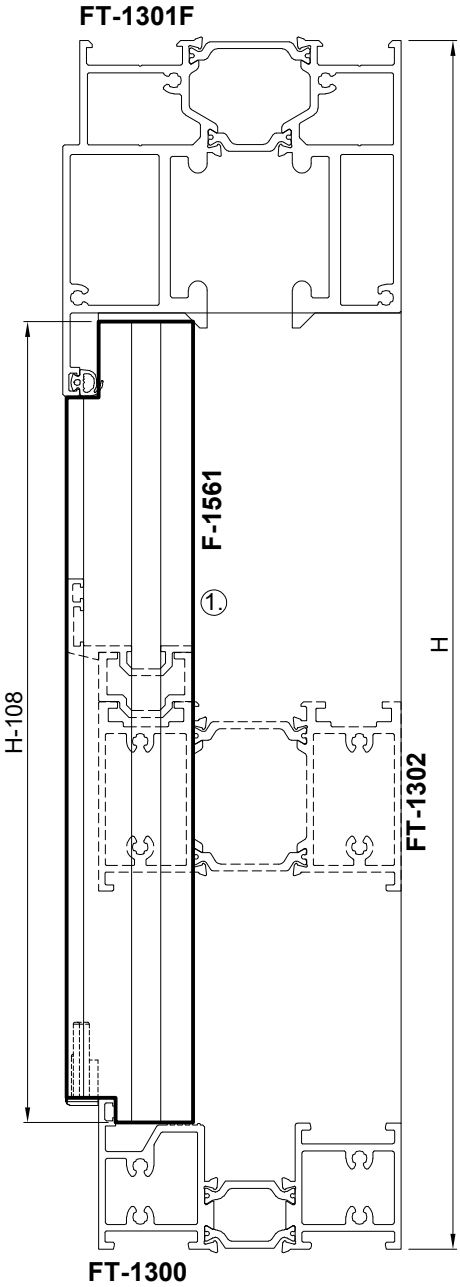

OBRADA PROCESING F-1561
-obrada vretenastim glodalom
-processing with end mill

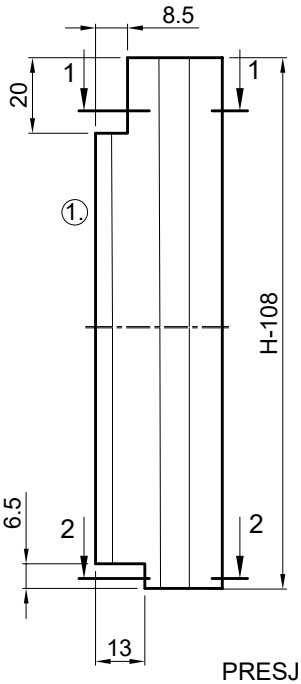

PRESJEK 1-1
SECTION 1-1

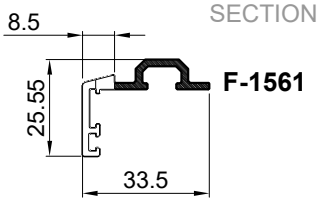

PRESJEK 2-2
SECTION 2-2

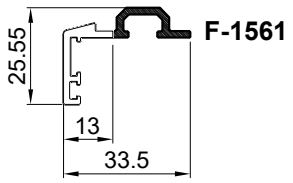

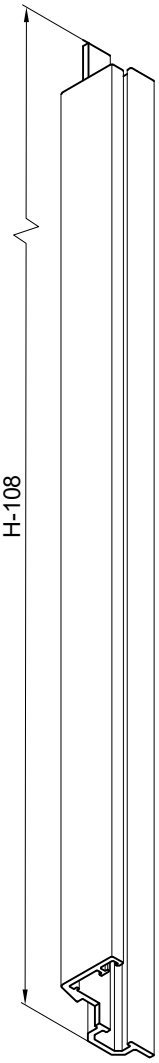

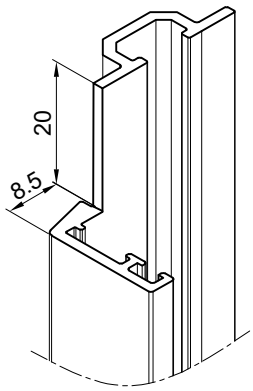

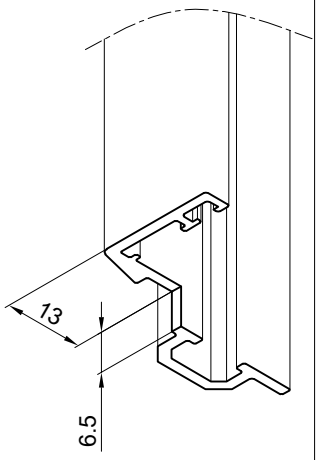

UGRADNJA I OBRADA PROFILA F-1561
-ugrađuje se u okvir rama
INSTALLATION AND PROCCESING PROFILE F-1561
-mounting in the frame profile

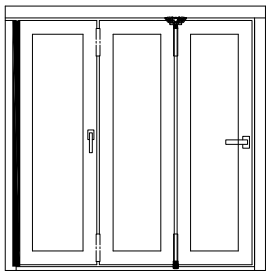

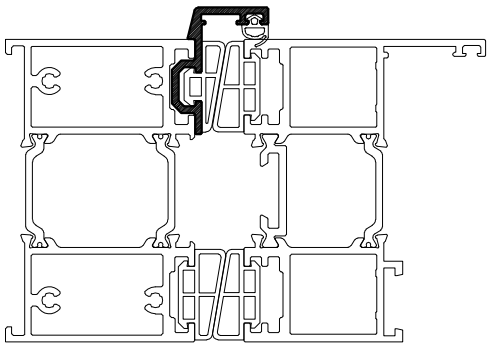

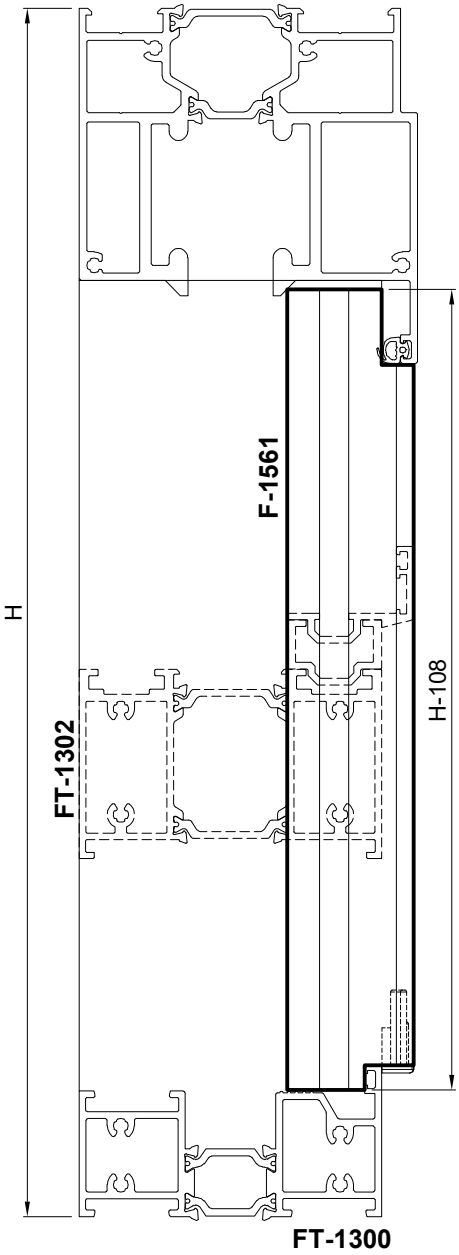

OBRADA PROCESING F-1561
-obrada vretenastim glodalom
-processing with end mill

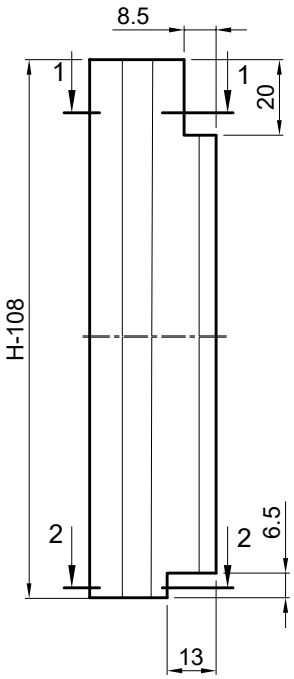

PRESJEK 1-1
SECTION 1-1

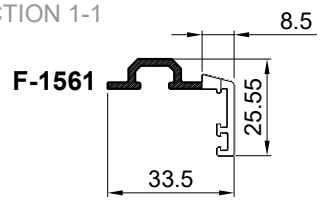

PRESJEK 2-2
SECTION 2-2

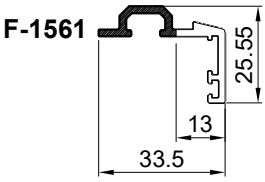

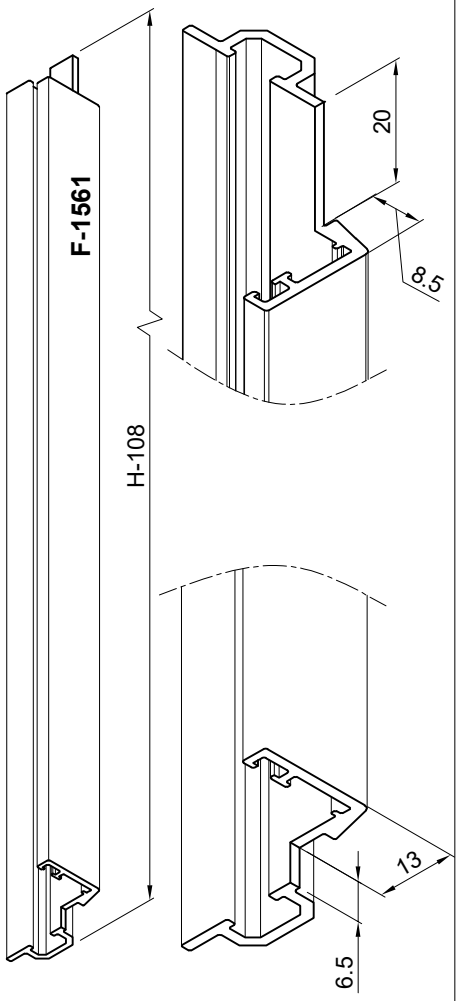

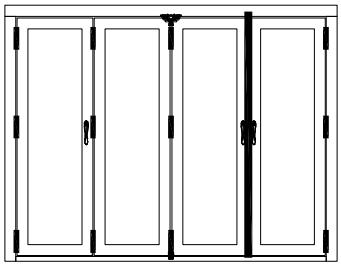

UGRADNJA I OBRADA PROFILA F-1561 i F-1562
-Poz 1. - F-1561- ugrađuje se na krilo na mjestu brave
-Poz 2. - F-1562- ugrađuje se na krilo na mjestu brave
INSTALLATION AND PROCCESING PROFILE F-1561 and F-1562
-Poz 1. - F-1561- mounting on the sash at the lock position
-Poz 2. - F-1562- mounting on the sash at the lock position

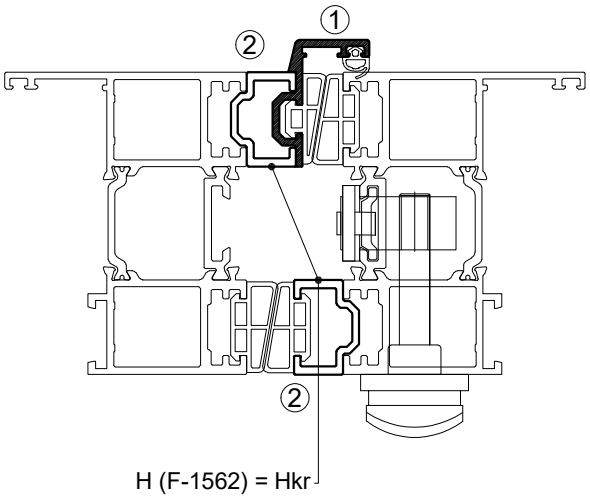

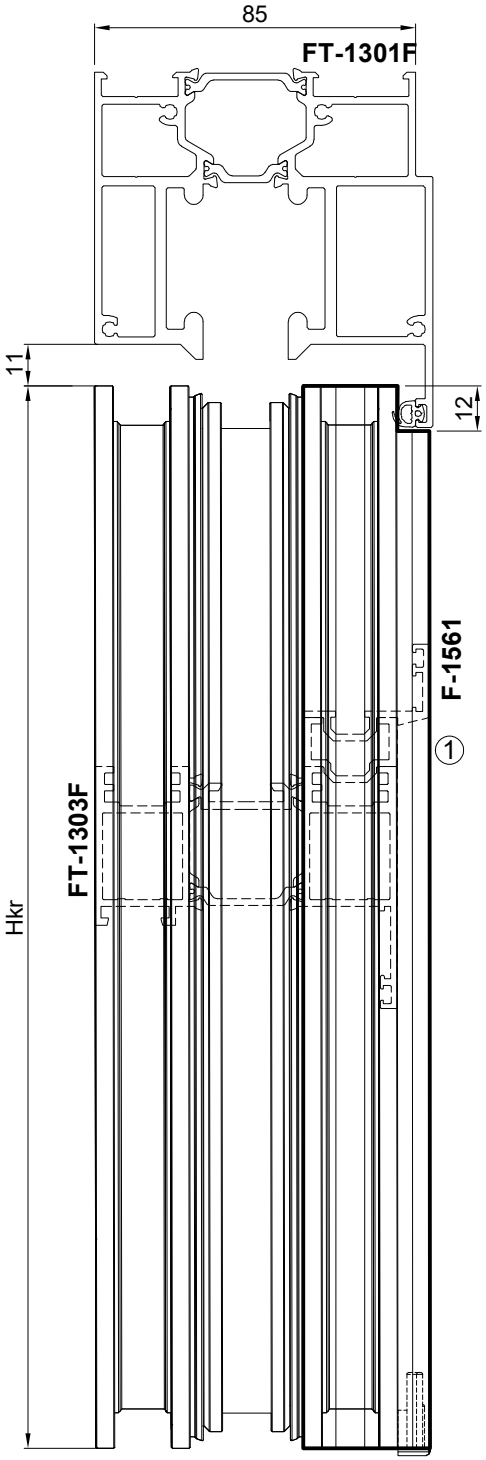

OBRADA PROCESING F-1561
-obrada vretenastim glodalom
-processing with end mill

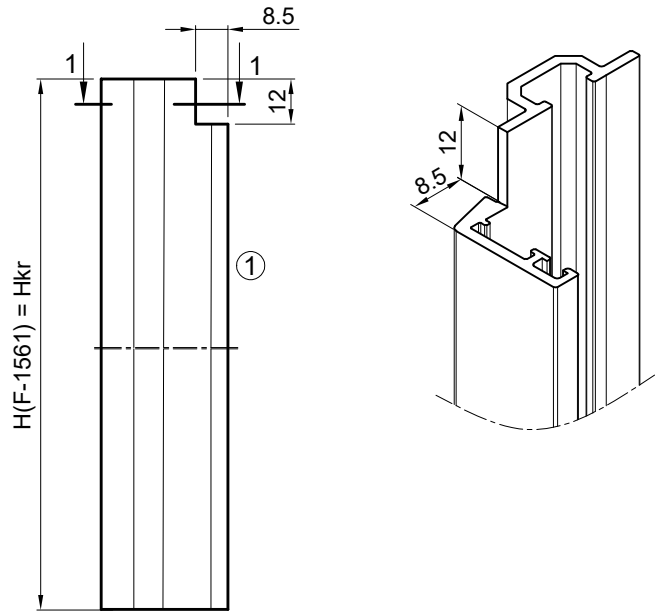

PRESJEK 1-1
SECTION 1-1

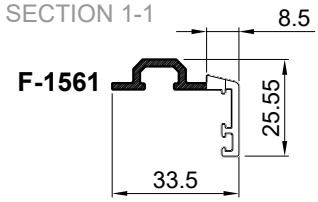

UGRADNJA PVC UMETKA 363.069 U PROFIL F-1561

INSERT PVC PIECE 360.009 IN PROFILE F-1561

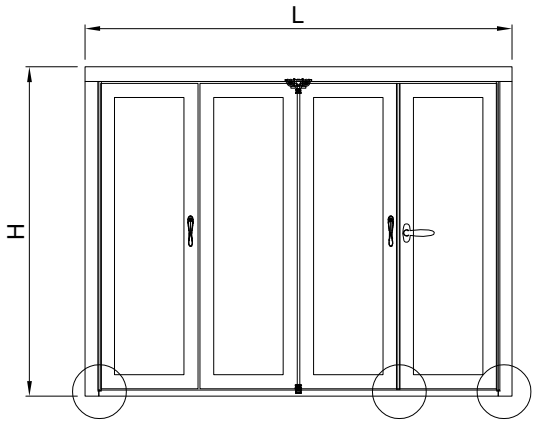

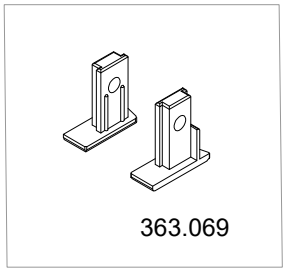

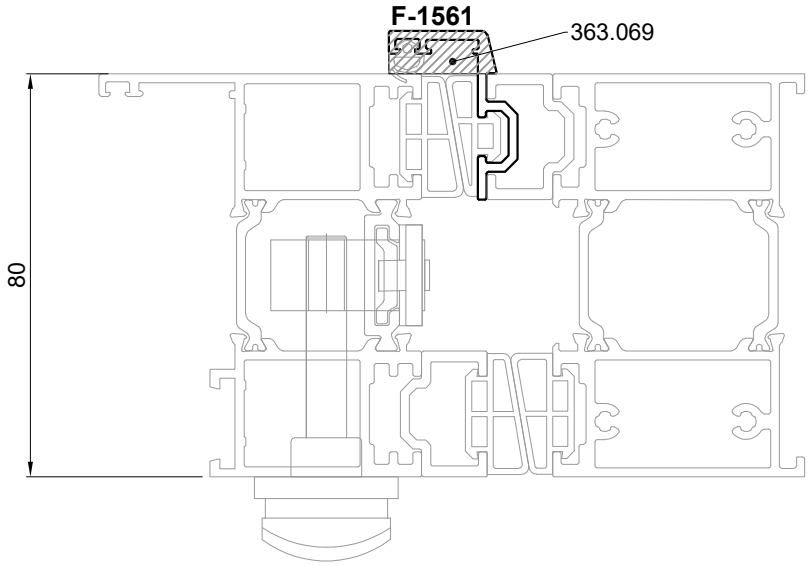

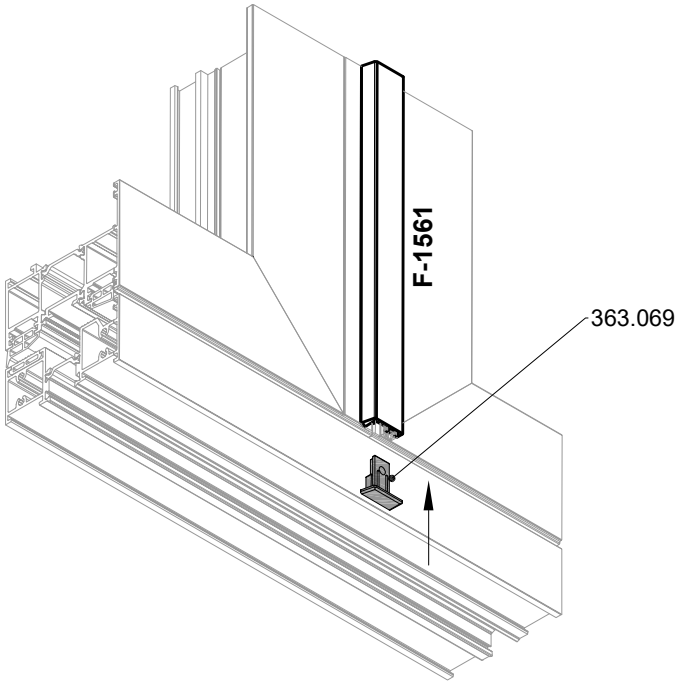

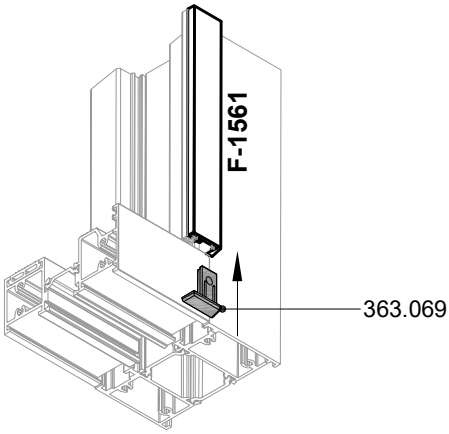

UGRADNJA I OBRADA PROFILA KRILA ZA SKRIVENI ODVOD KAPLJEVINA
-Izvod kapljevina iz krila pomoću monodrain cjevčice 360.009
-Obradu profila raditi glodalom ili svrdlom Ø10
svakih 600 mm (250 mm od krajeva profila)

INSERT AND PROCCESING SASH PROFILE FOR HIDDEN DRAINAGE
-Drainage from profile with monodrain tube 360.009
-Proccesing profile with milling or drilling Ø10
every 600 mm (250 mm from end of profile)

Ugradnja monodrain cjevčice 360.009
Insert monodrain tube 360.009

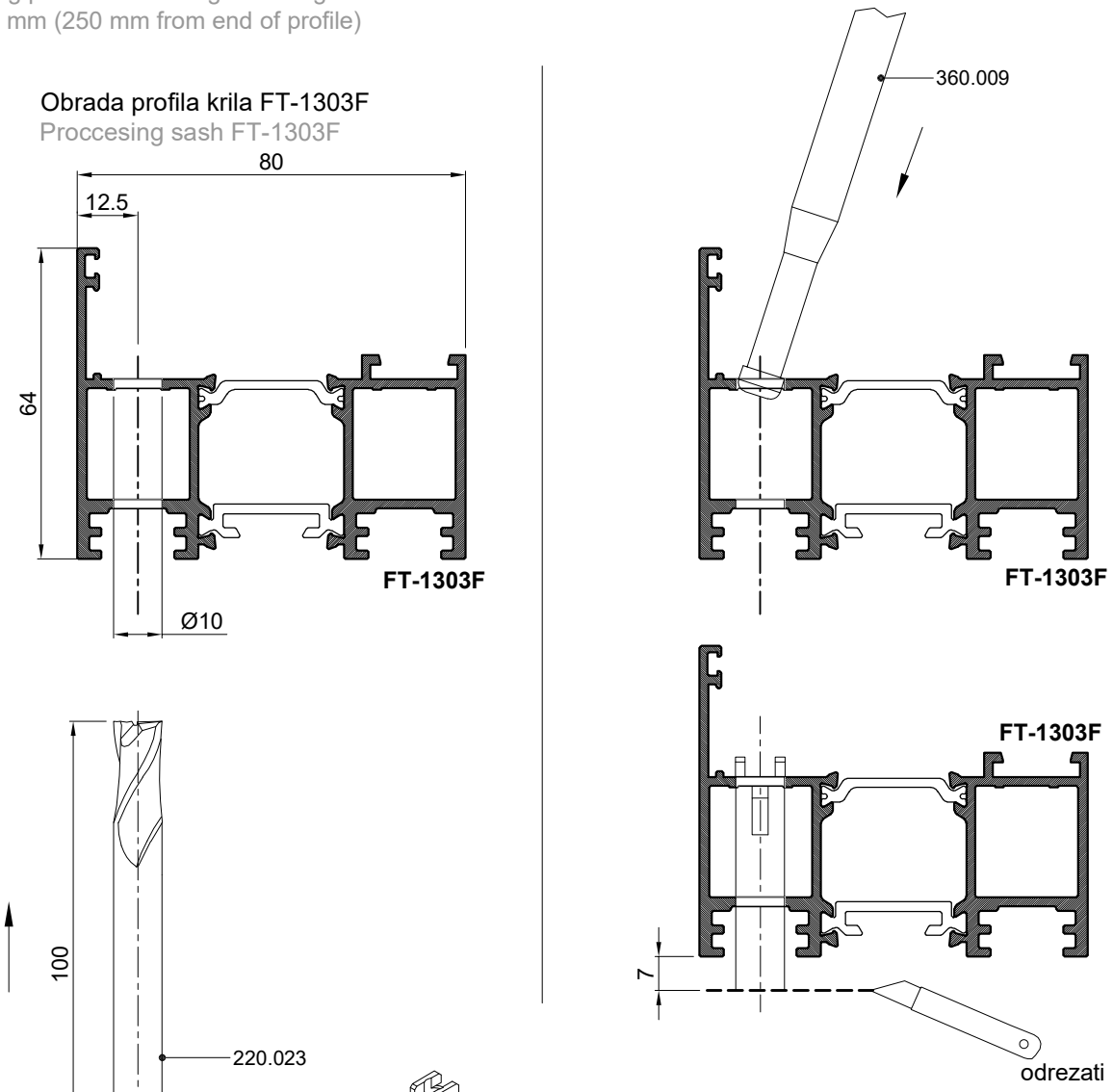

Obrada profila krila FT-1303F
Proccesing sash FT-1303F

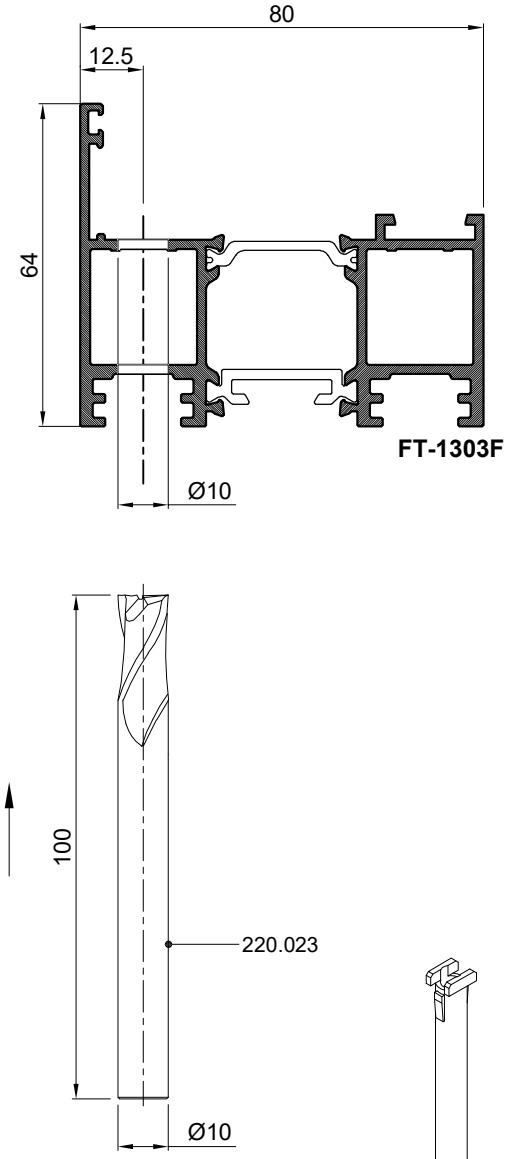

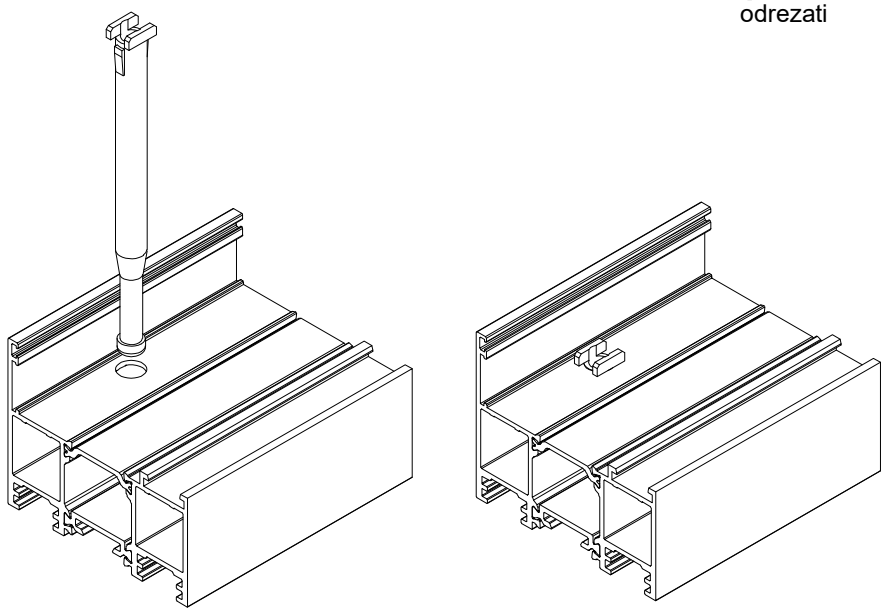

OTVARANJE UNUTRA
INSIDE OPENING

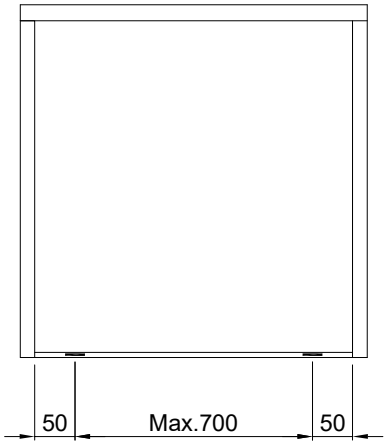

OBRADA PROFILA FT-1300F RADI ODVODA KAPLJEVINA
1. obrada vretenastim glodalom- poz.A
(smaknuto u odnosu na C za 100 mm prema unutra)
2. obrada T glodalom 13x6- poz.B
(smaknuto u odnosu na C za 100 mm prema unutra)
3. obrada vretenastim glodalom -poz.C
-PVC umetak na otvoru za odvod kapljevina 373.003

PROCCESING PROFILE FT-1300F FOR DRAINAGE
1. processing with end mill -poz.A
(shift compared to C za 100 mm inward)
2. processing with T-slot 13x6 end mill -poz.B
(shift compared to C za 100 mm inward)
3. processing with end mill -poz.C
-PVC insert on drainage hole 373.003

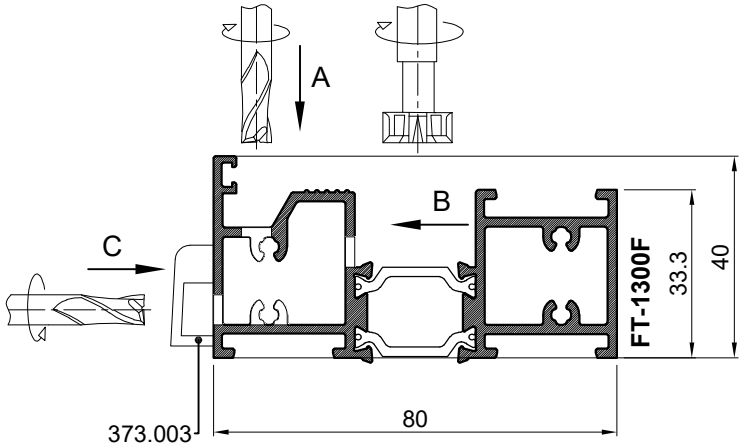

POGLED C
VIEW C

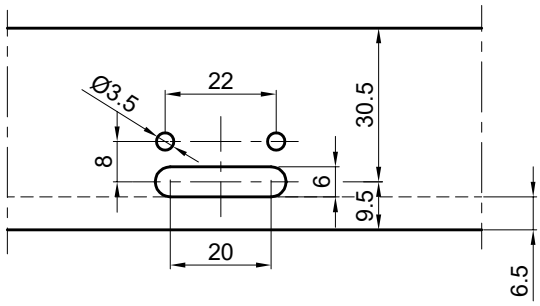

POGLED A
VIEW A

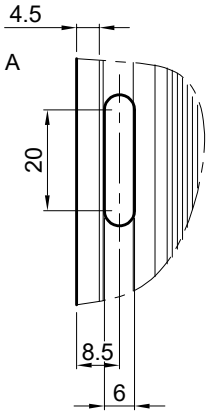

POGLED B
VIEW B

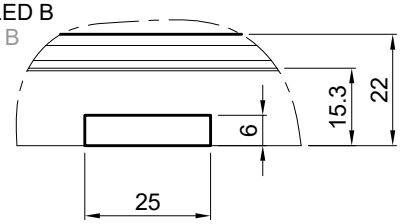

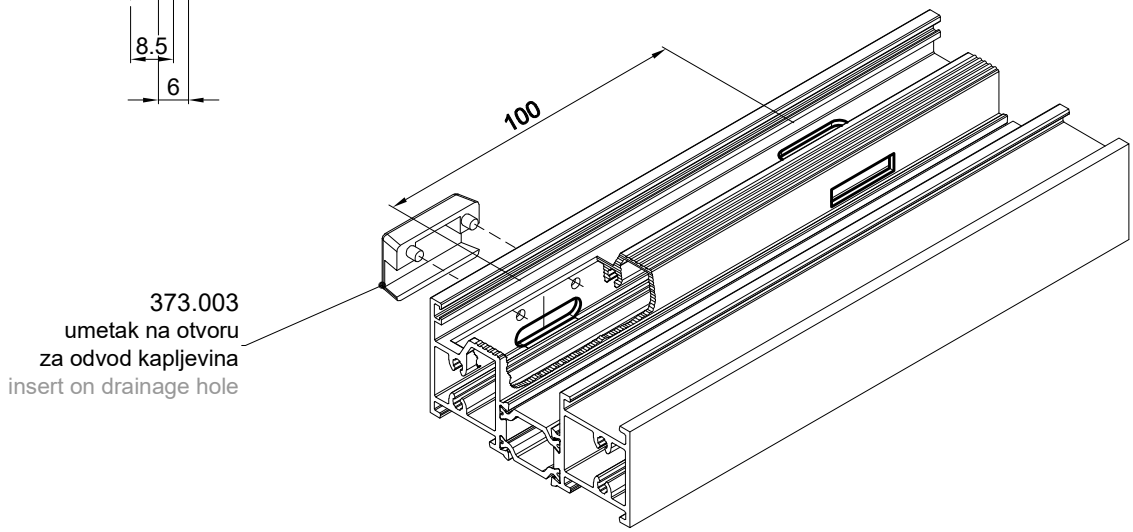

OTVARANJE VANI
OUTSIDE OPENING

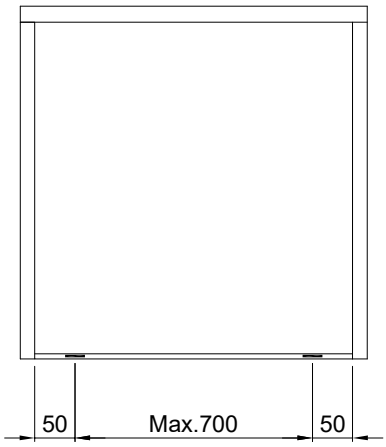

OBRADA PROFILA FT-1300F RADI ODVODA KAPLJEVINA
1. obrada vretenastim glodalom- poz.A
   (smaknuto u odnosu na C za 100 mm prema unutra)
2. obrada T glodalom 13x6- poz.B
   (smaknuto u odnosu na C za 100 mm prema unutra)
3. obrada vretenastim glodalom -poz.C

-PVC umetak na otvoru za odvod kapljevina 373.003

PROCCESING PROFILE FT-1300F FOR DRAINAGE
1. processing with end mill -poz.A
   (shift compared to C za 100 mm inward)
2. processing with T-slot 13x6 milling cutter -poz.B
   (shift compared to C za 100 mm inward)
3. processing with end mill -poz.C

-PVC insert on drainage hole 373.003

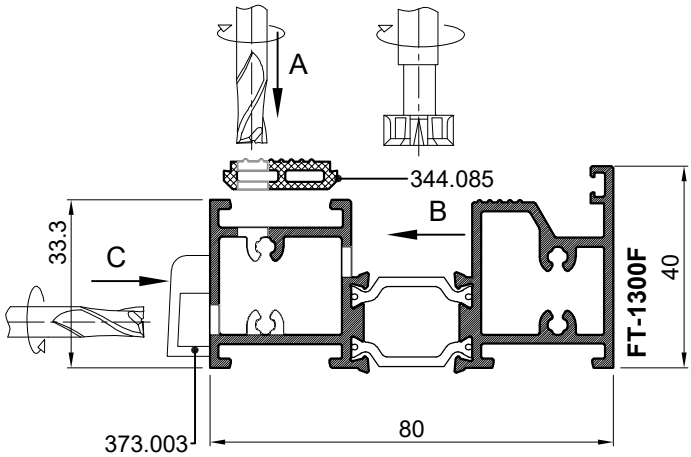

POGLED C

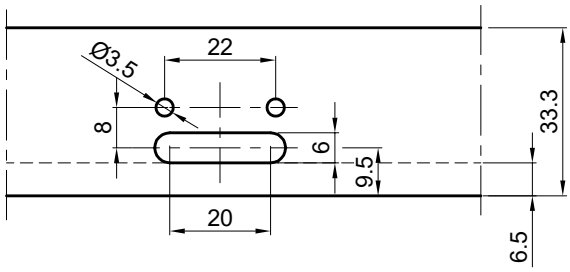

POGLED A (344.085)
VIEW A (344.085)

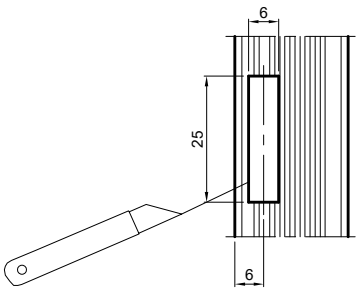

POGLED B
VIEW B

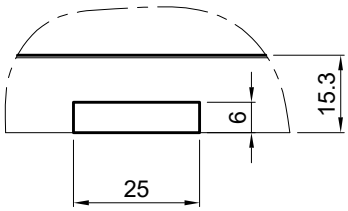

POGLED A
VIEW A

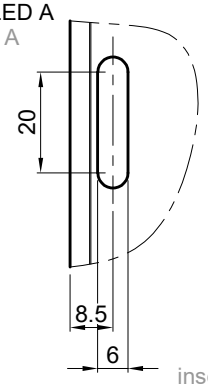

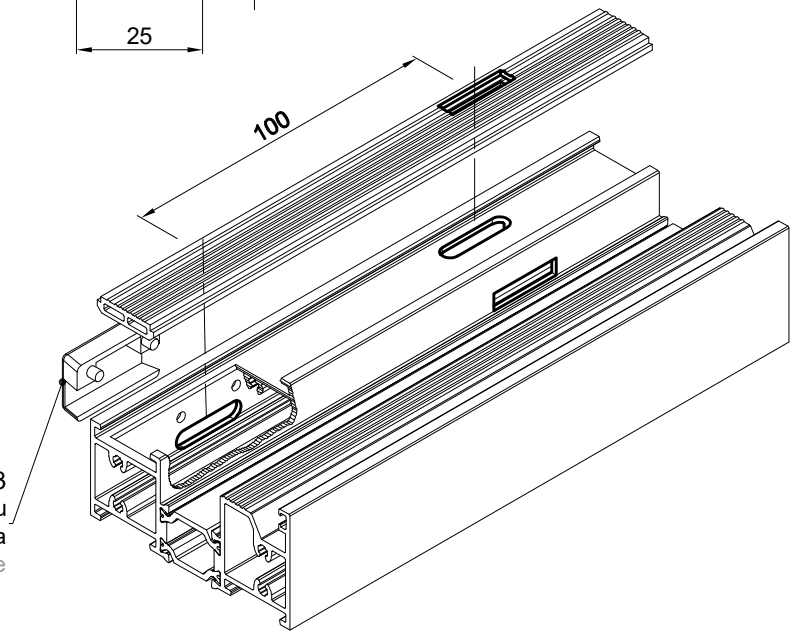

PRIKAZ KLJUČANJA KRILA
SHOW LOCKING SASH

Klizač F-1584 se povr. zaštićuje - prema RAL karti
The F-1584 slider is surface protected - according to the RAL chart

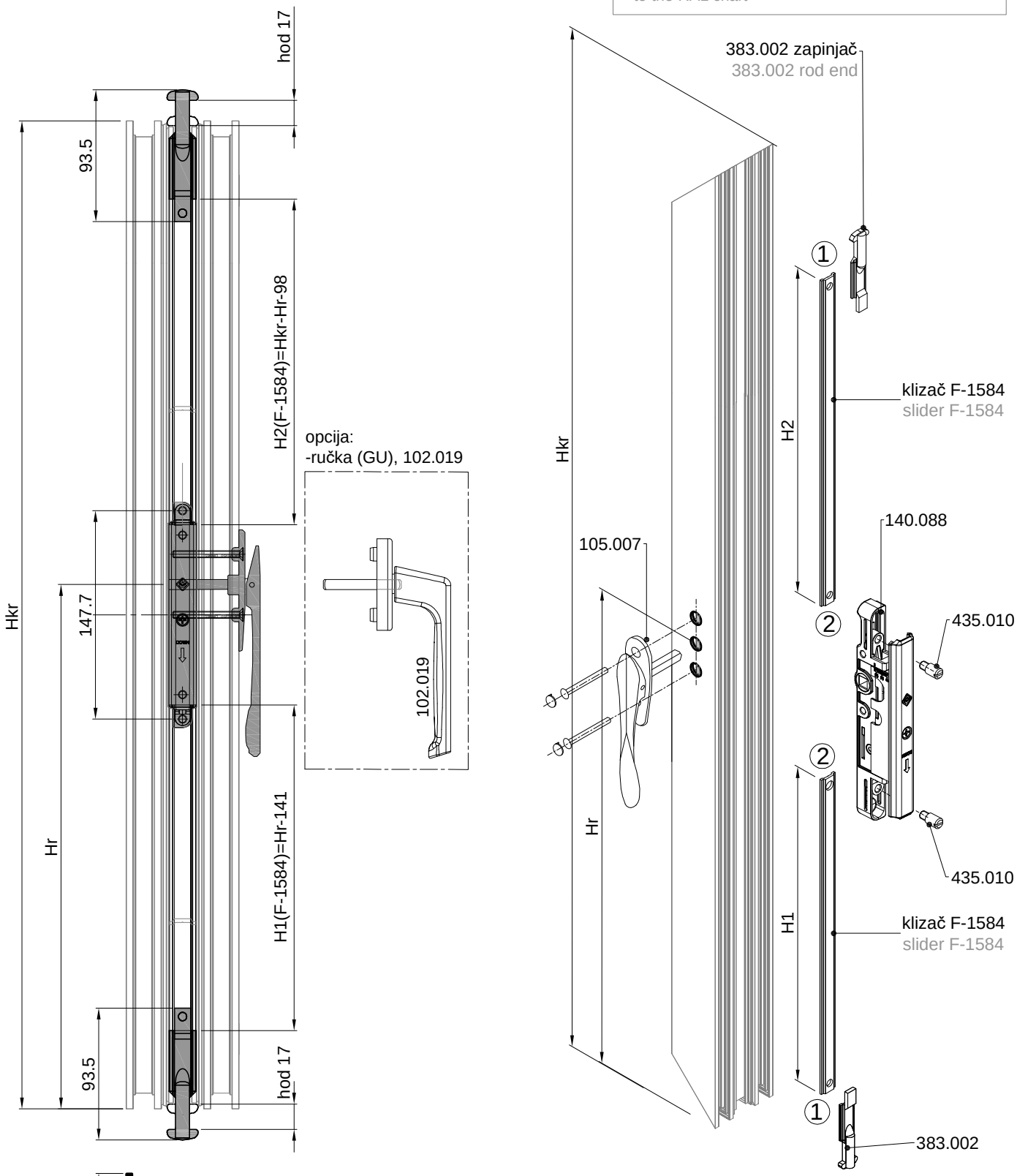

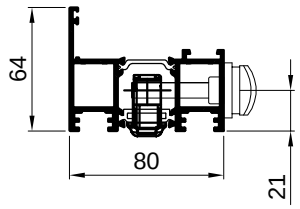

Obrada klizača F-1584 prema 383.002
Proccesing slider F-1584 acc. 383.002

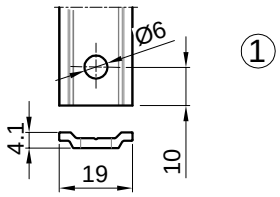

Obrada klizača F-1584 prema 140.088
Proccesing slider F-1584 acc. 140.088

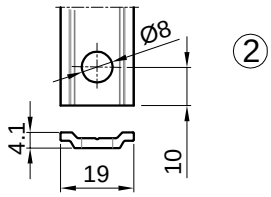

OBRADA PROFILA KRILA FT-1303F
-Za bravu 140.088, (Bing,Master), obrada vret. glodalom
-Za ručku 105.007, (Giesse), obrada vretenastim glodalom

PROCESSING PROFILE SASH FT-1303F
-For the lock 140.088, (Bing, Master),process. with end mill
-For the handle 105.007, (Giesse),processing with end mill

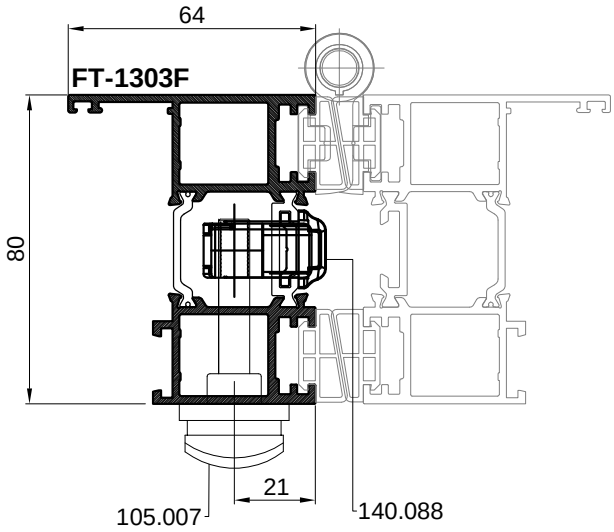

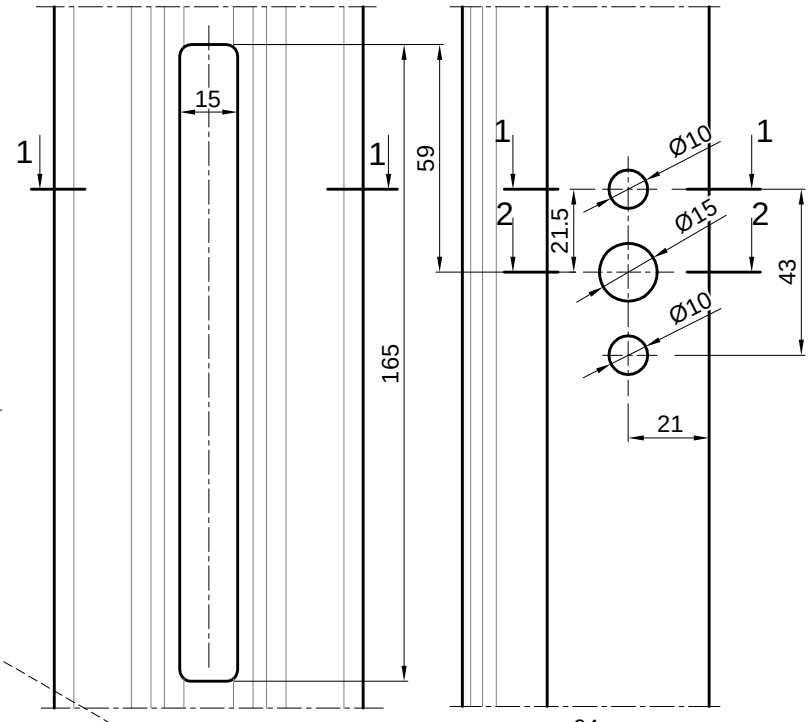

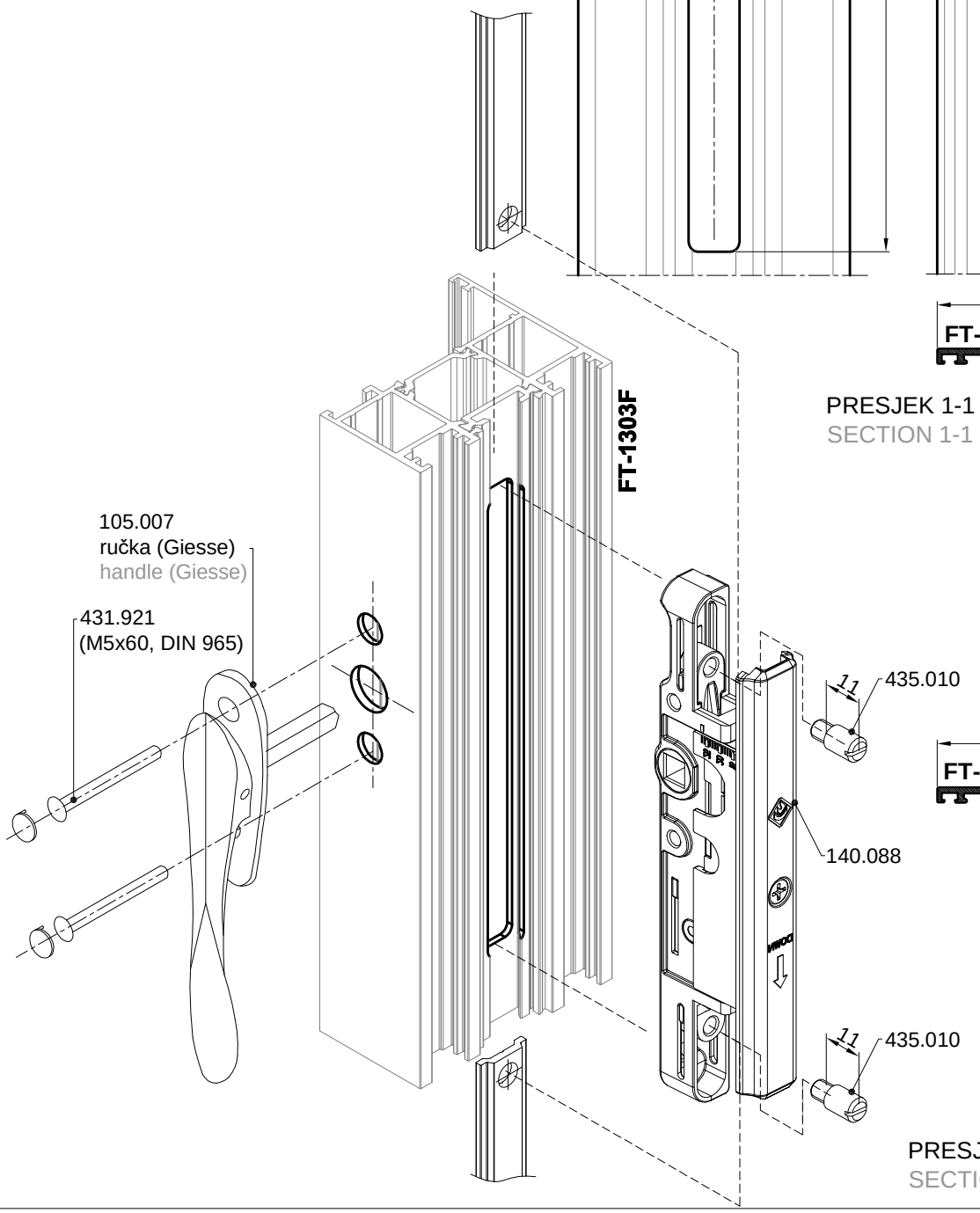

PRESJEK 1-1
SECTION 1-1

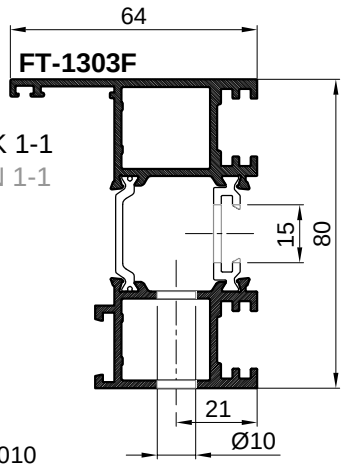

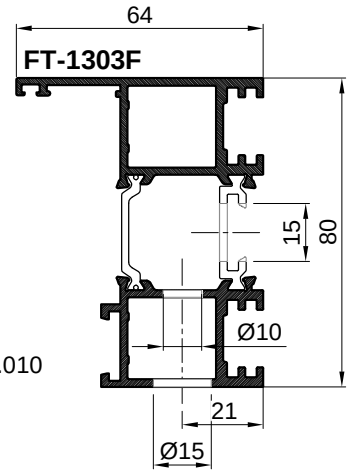

PRESJEK 2-2
SECTION 2-2

OBRADA PROFILA KRILA FT-1303F
-Za bravu 140.088, (Bing,Master), obrada vret. glodalom
-Za ručku 102.019, (GU), obrada vretenastim glodalom

PROCESSING PROFILE SASH FT-1303F
-For the lock 140.088, (Bing, Master),process. with end mill
-For the handle 102.019, (GU),processing with end mill

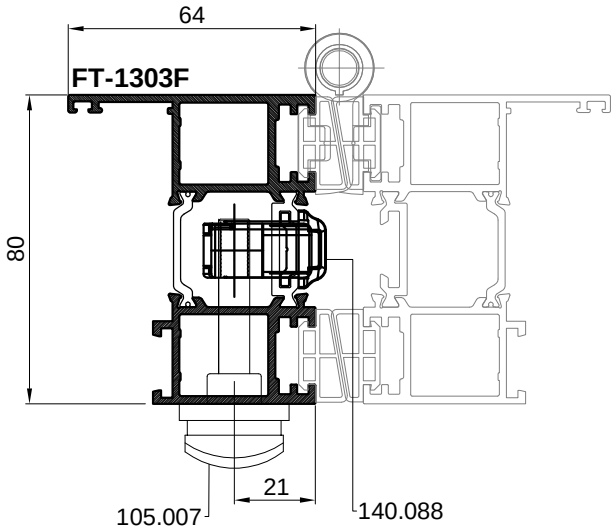

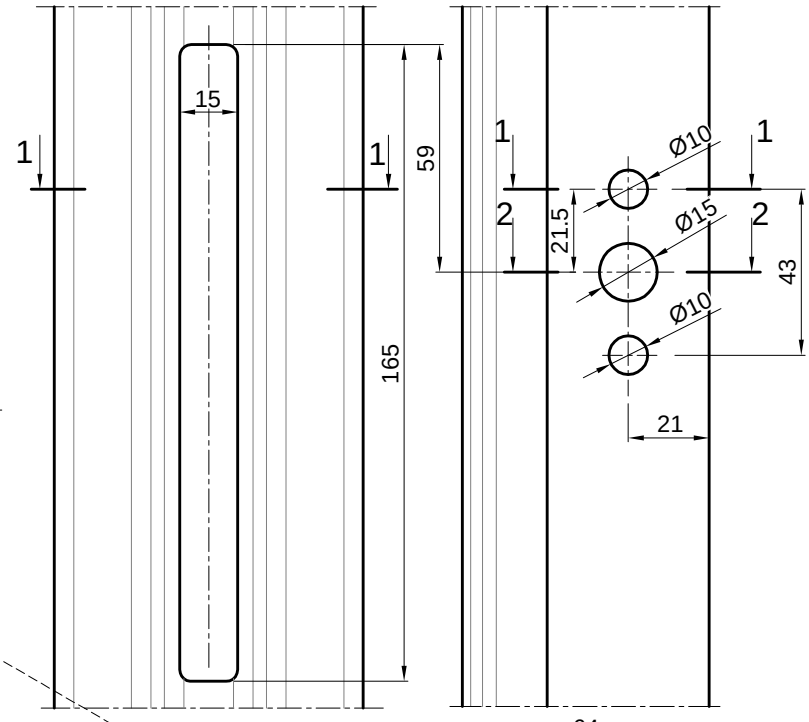

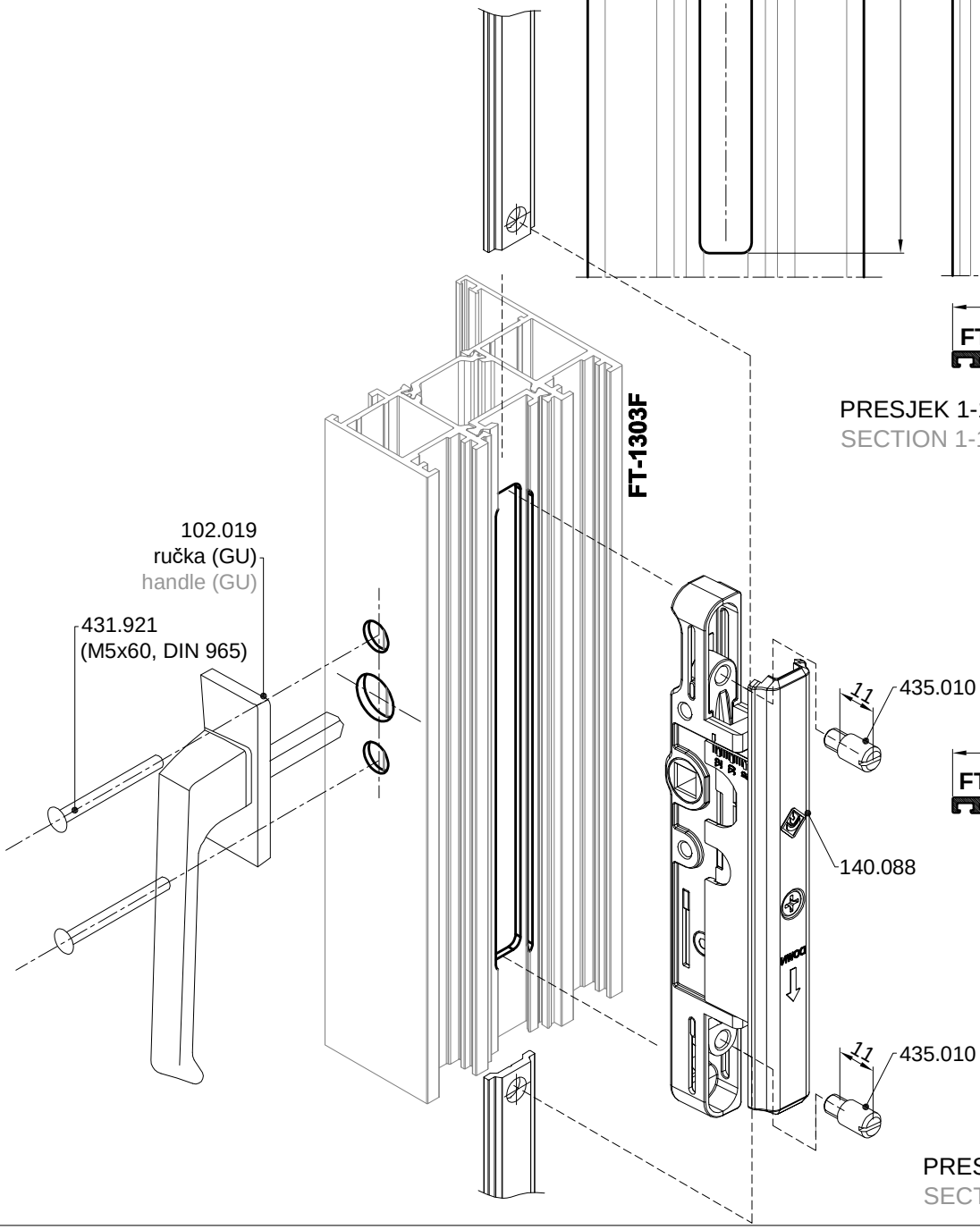

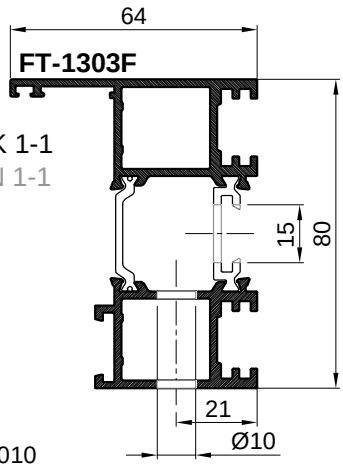

PRESJEK 1-1
SECTION 1-1

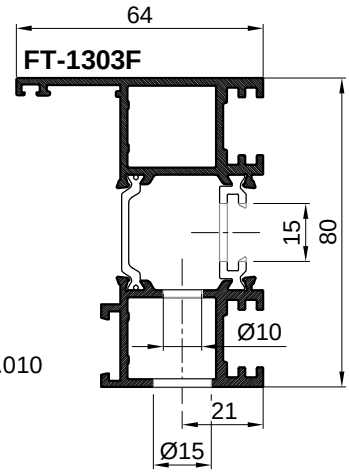

PRESJEK 2-2
SECTION 2-2

DETALJ SA OBOSTRANOM RUČKOM
OBRADA PROFILA KRILA FT-1303F
-Za bravu 140.088, (Bing, Master), obrada vret. glodalom
-Za ručku 102.019, (GU), obrada vretenastim glodalom
DETAIL WITH HANDLE ON BOTH SIDES
PROCESSING PROFILE SASH FT-1303F
-For the lock 140.088, (Bing, Master),processing with end mill
-For the handle 102.019, (GU),processing with end mill

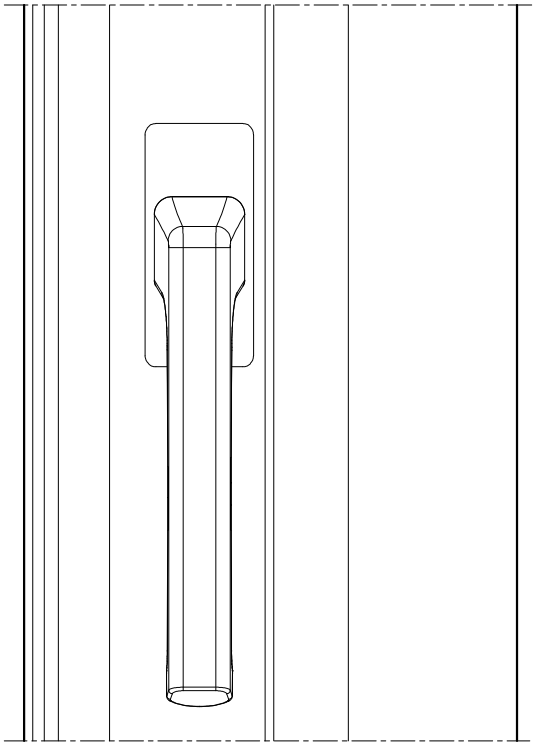

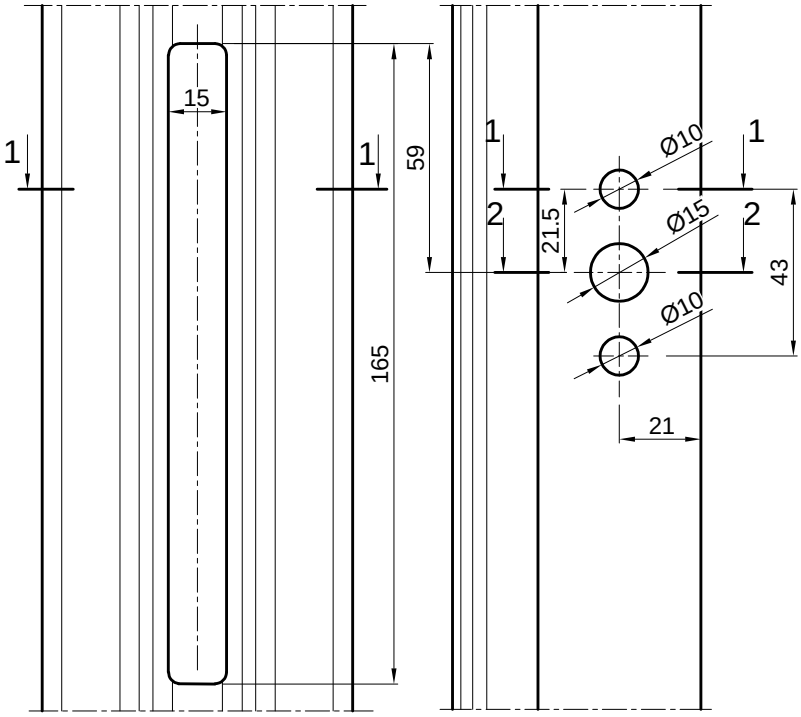

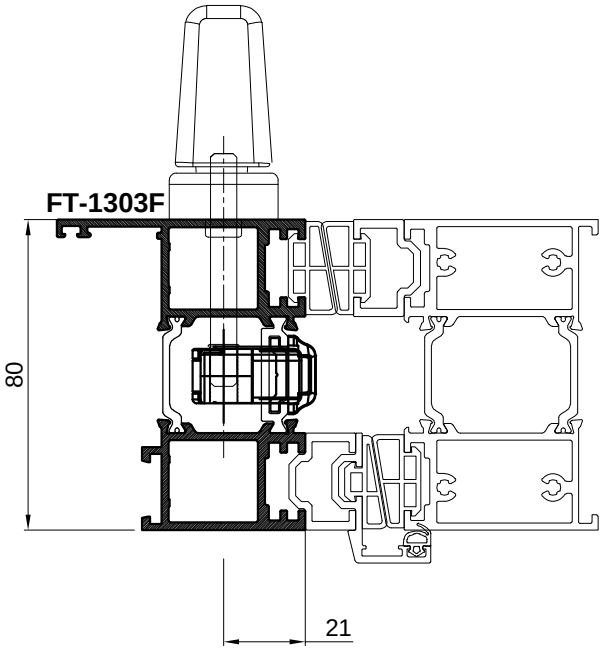

PRESJEK 1-1
SECTION 1-1

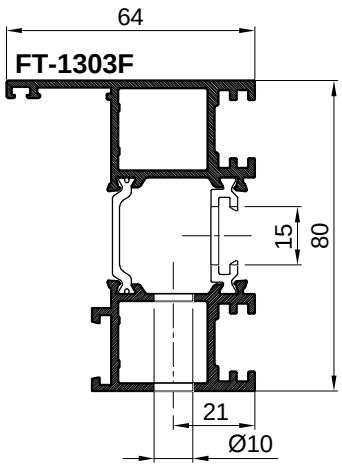

PRESJEK 2-2
SECTION 2-2

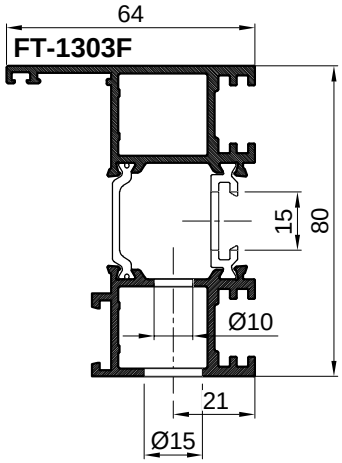

OBRADA PROFILA KRILA VRATA FT-1303(otvaranje unutra) ZA BRAVU S JEZIČKOM 122.073 (GU-BKS) I RUČKU 102.027.xx (GU-BKS)

PROCESSING OF DOOR LEAF PROFILE (inward opening) FOR LOCK WITH LATCHBOLT 122.073 (GU-BKS) AND HANDLE 102.027.xx (GU-BKS)

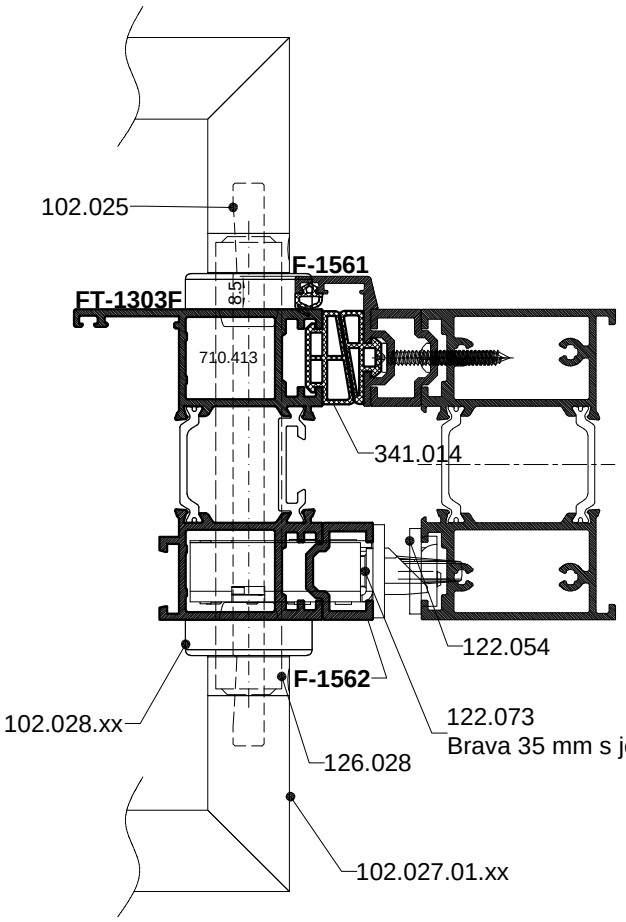

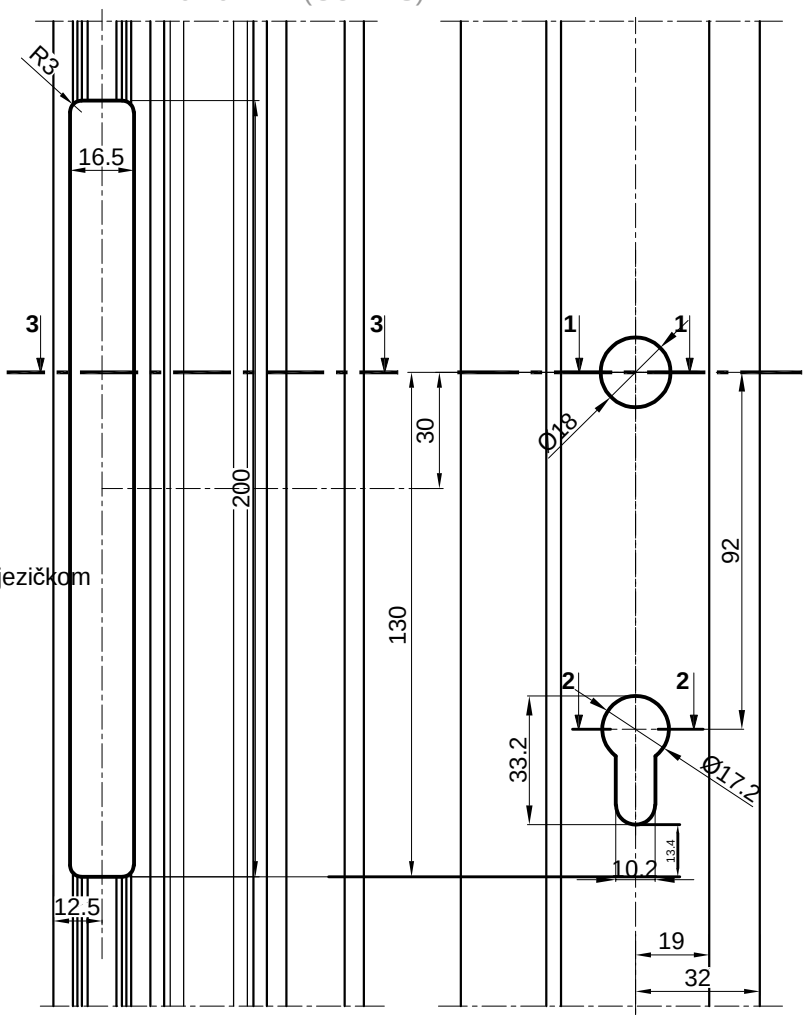

PRESJEK 3-3
CROSS SECTION 3-3

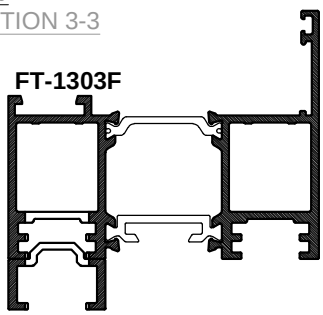

PRESJEK 1-1
CROSS SECTION 1-1

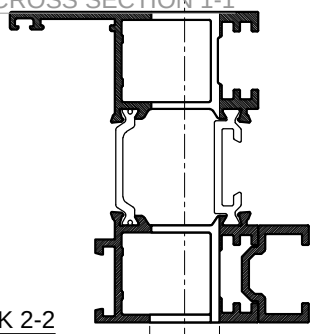

PRESJEK 2-2
CROSS SECTION 2-2

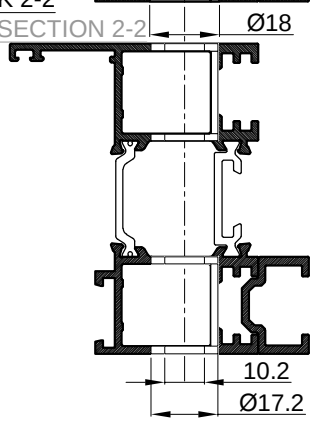

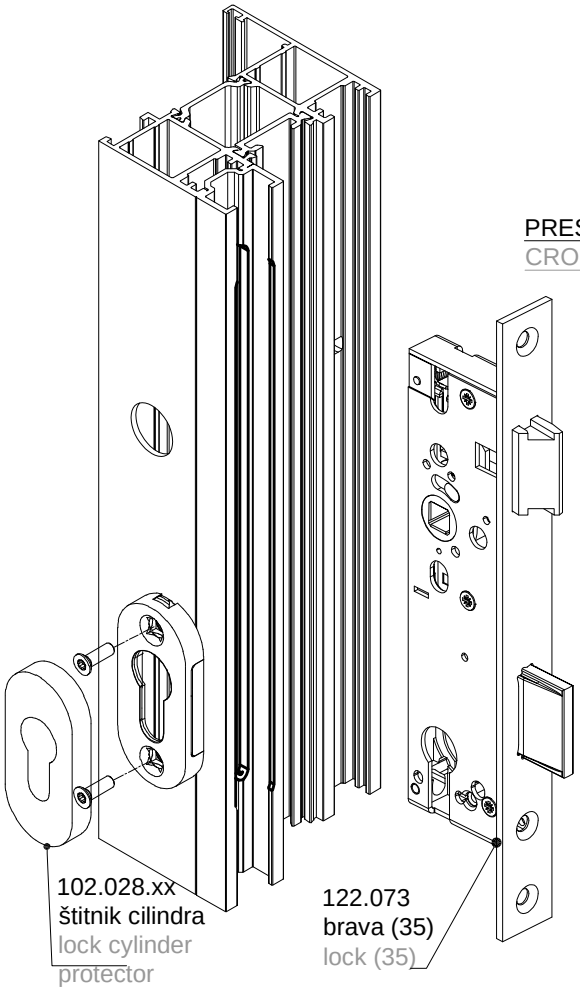

UGRADNJA BRTVI U OKVIR RAMA
MOUNTING GASKETS IN FRAME PROFILE

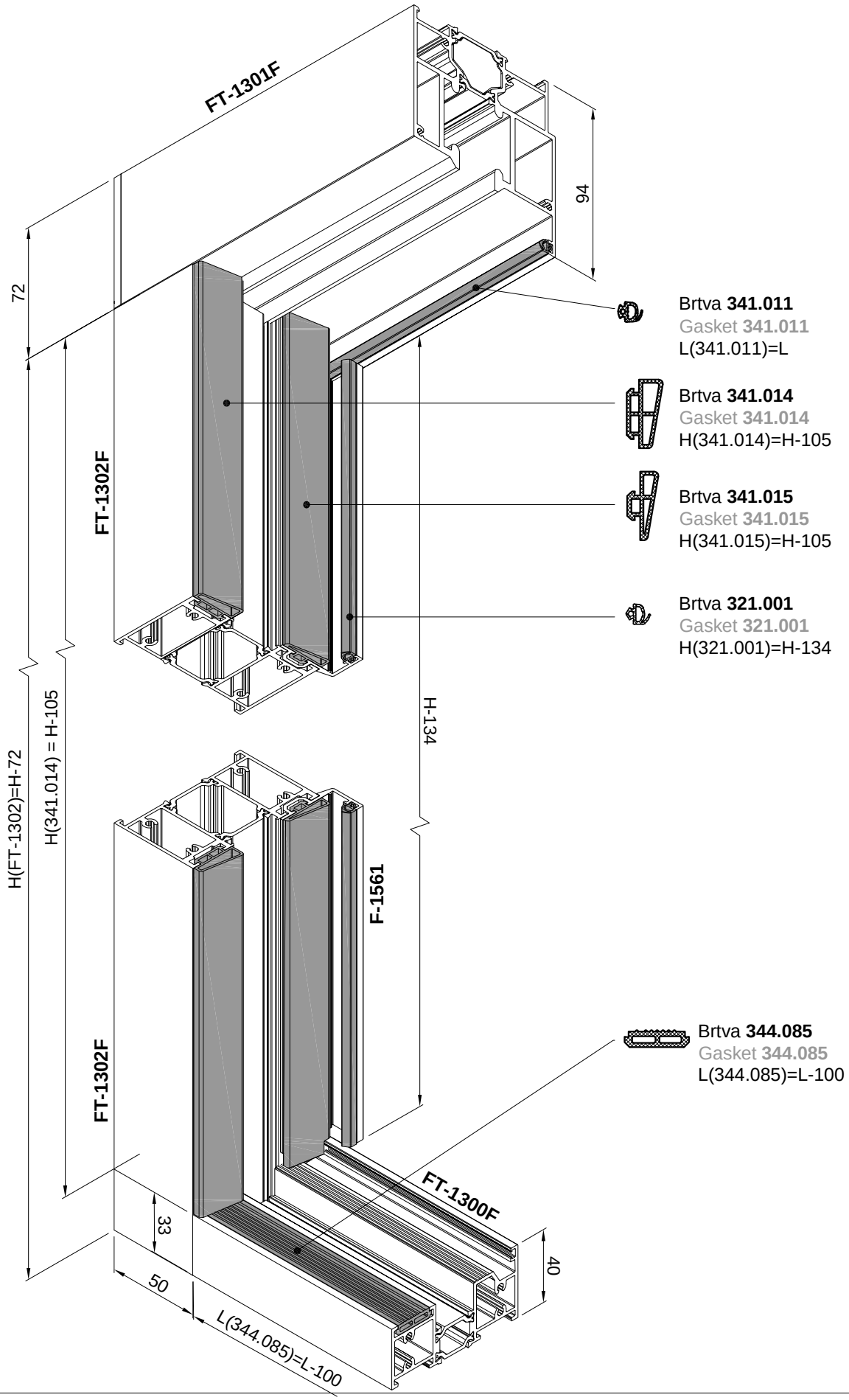

UGRADNJA BRTVI U OKVIR KRILA
MOUTING GASKETS IN SASH PROFILE

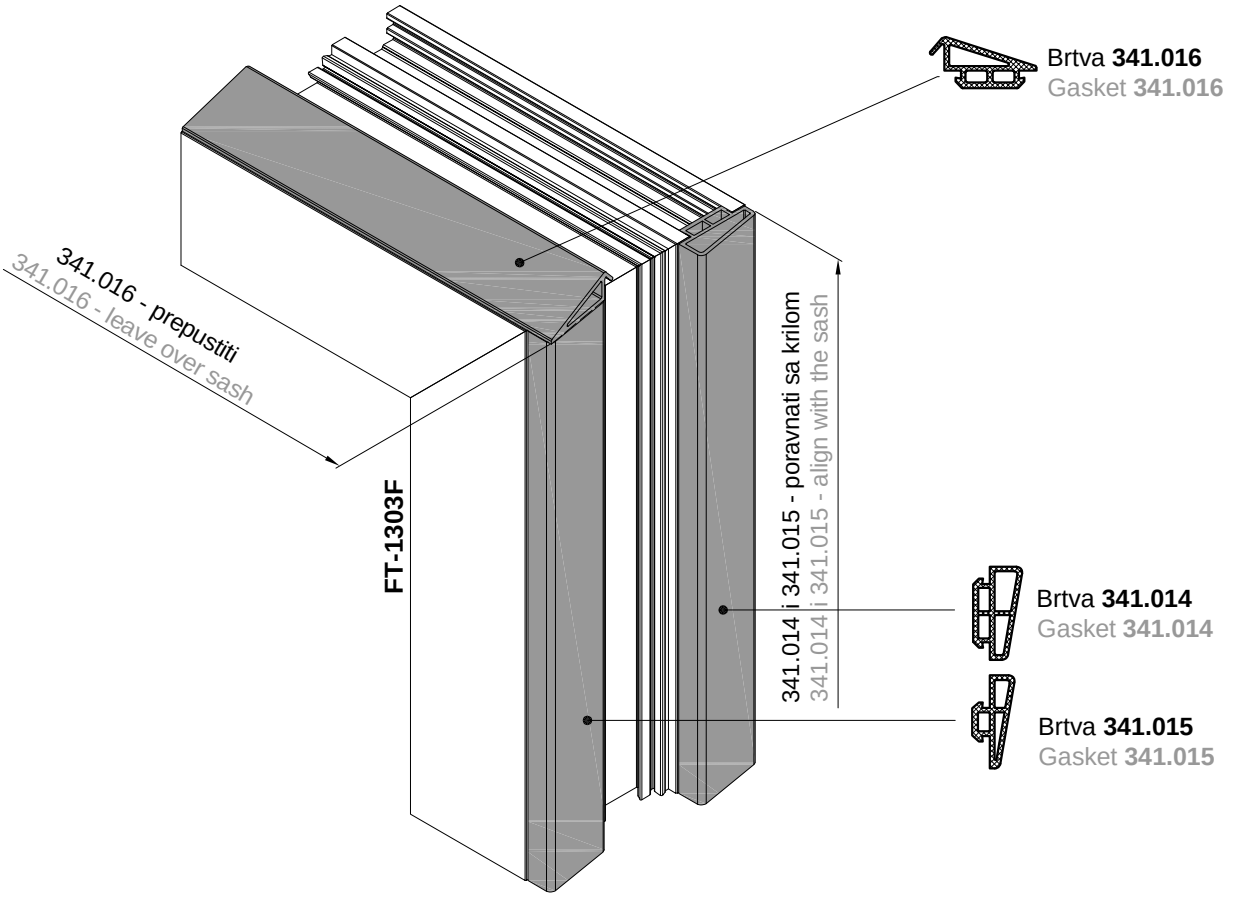

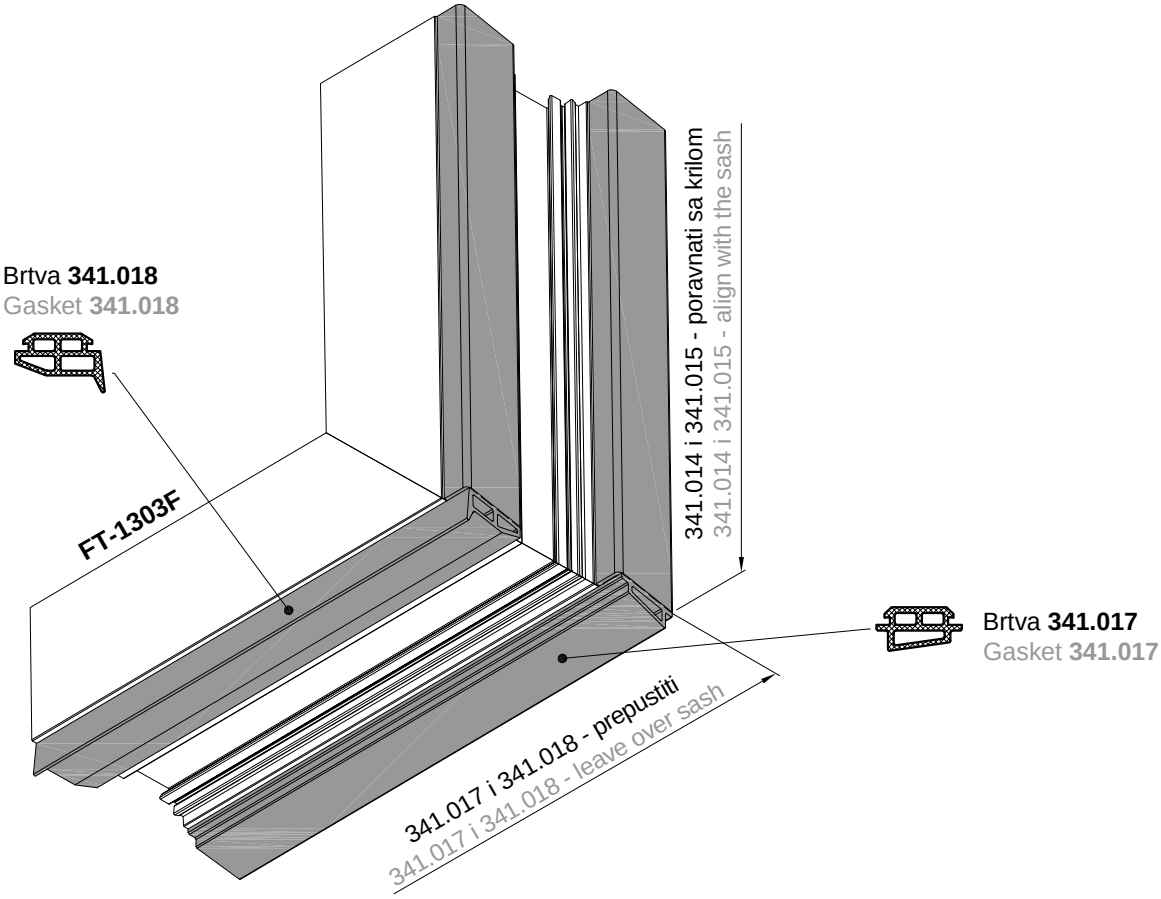

UGRADNJA BRTVI U OKVIR KRILA
MOUTING GASKETS IN SASH PROFILE

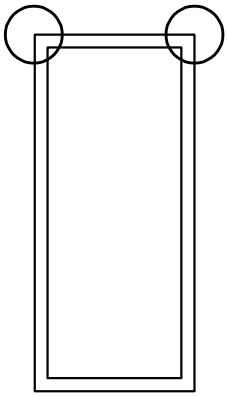

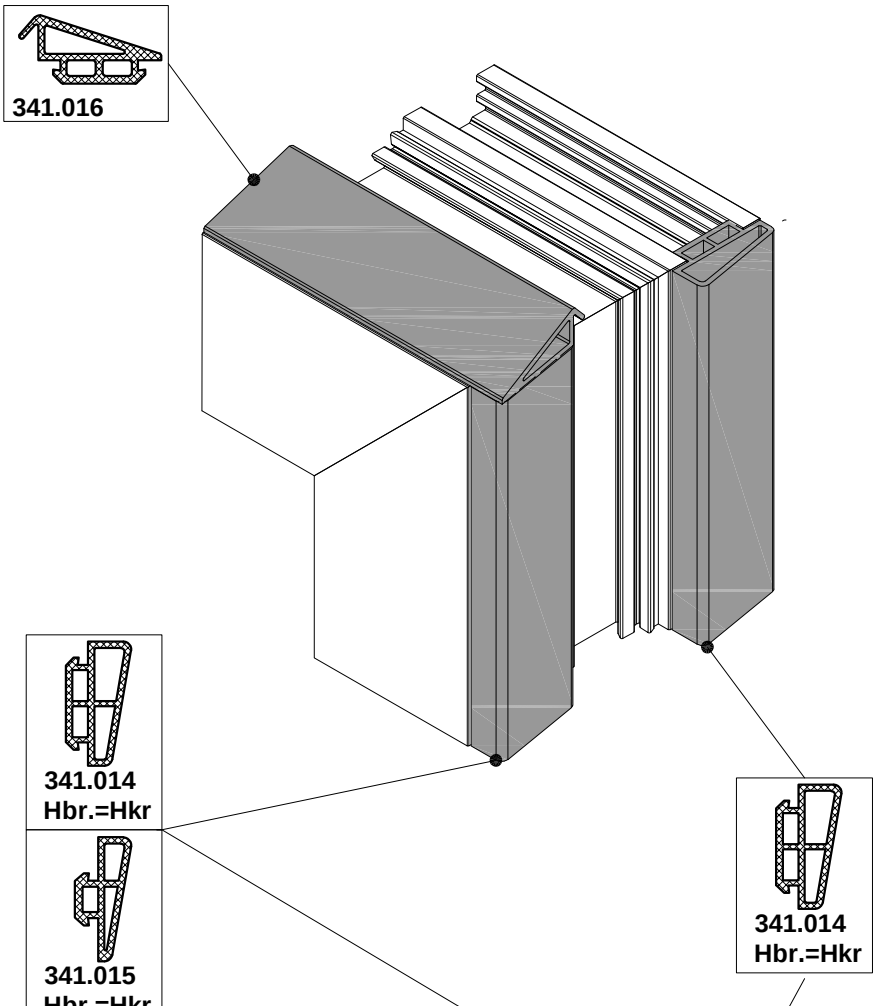

-okomite brtve (341.014 i 341.015) se režu prema visini krila
-vodoravna brtva (341.016) se prepušta preko okomite brtve prateći njenu konturu
-spoj brtvi se lijepi ljepilom za brtve

-the vertical gaskets (341.014 and 341.015) is cut in according to the sash height
-the horizontal gasket (341.016) is left over the vertical gasket by following its contour
-the joint of the gasket is sticking with glues for gasket

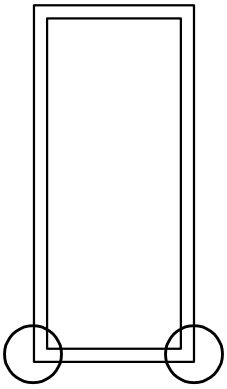

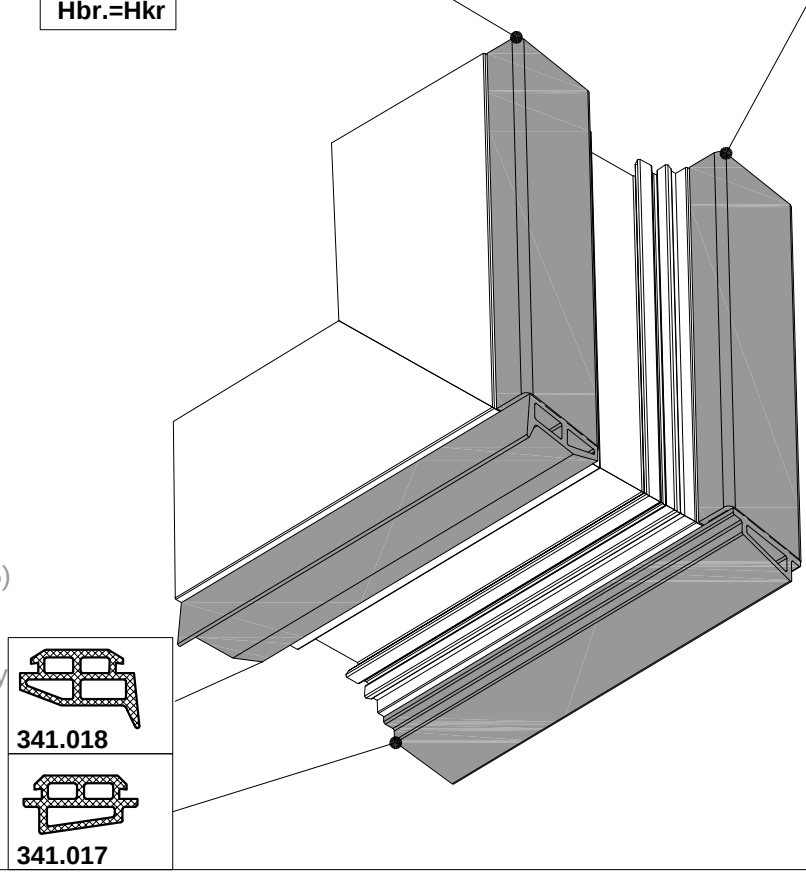

-okomite brtve (341.014 i 341.015) se režu prema visini krila
-vodoravne brtve (341.017 i 341.018) se prepuštaju preko okomite brtve prateći njenu konturu
-spoj brtvi se lijepi ljepilom za brtve

-the vertical gaskets (341.014 and 341.015) is cut in according to the sash height
-the horizontal gaskets (341.017 and 341.018) are left over the vertical gasket by following its contour
-the joint of the gasket is sticking with glues for gasket

ISJECANJE BRTVE NA MJESTU BAGLAMA
CUTTING GASKETS IN THE HINGE POSITION

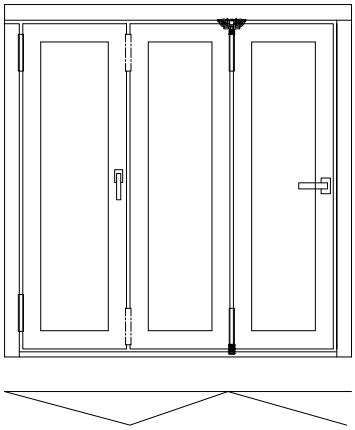

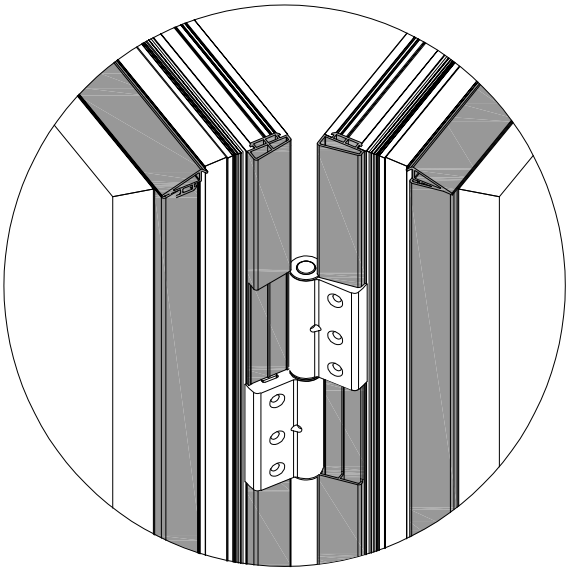

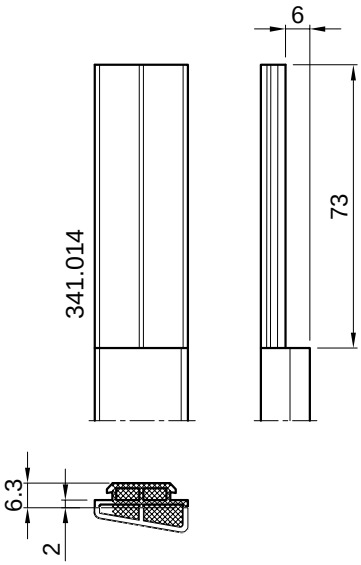

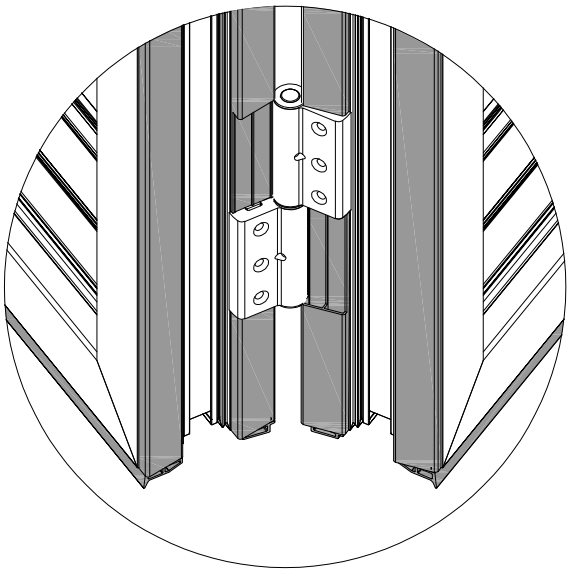

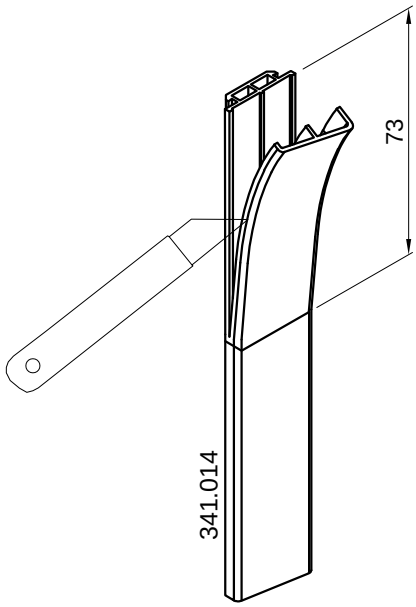

RASPORED MEHANIZAMA ZA OTVARANJE
OTVARANJE UNUTRA
SCHEDULE MECHANISM FOR OPENING
INSIDE OPENING

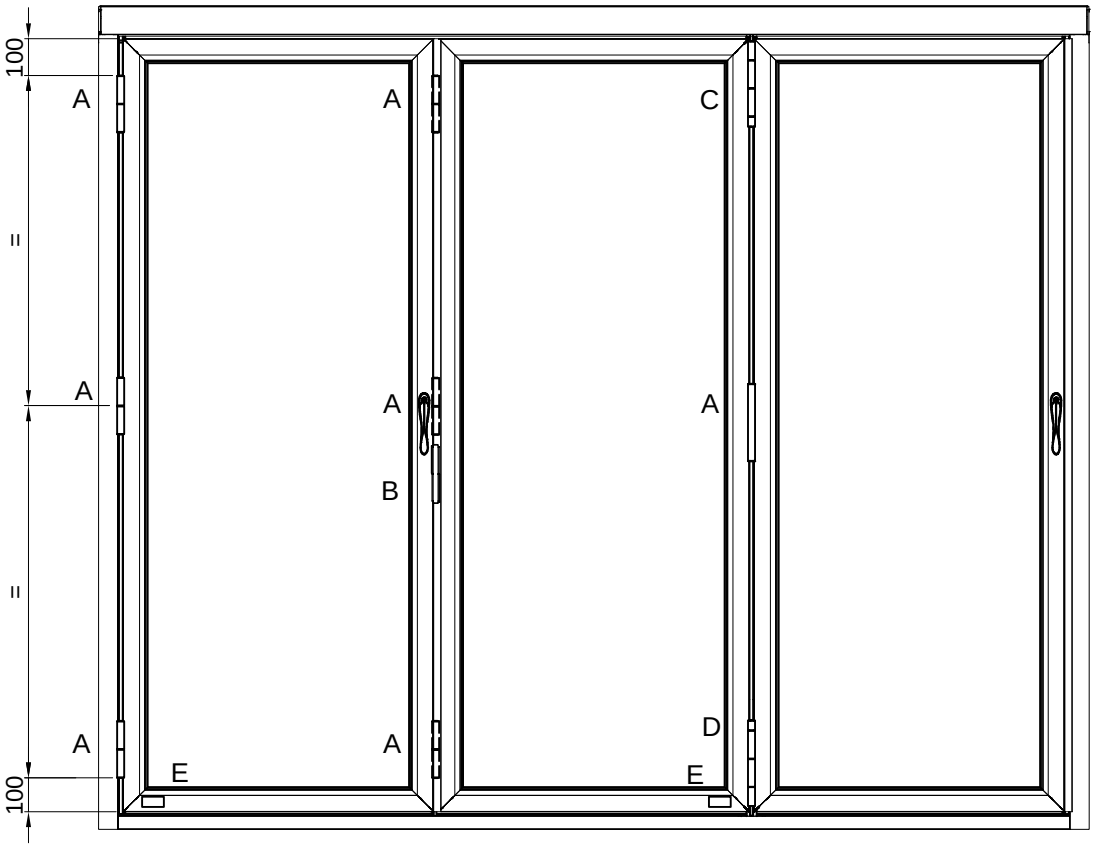

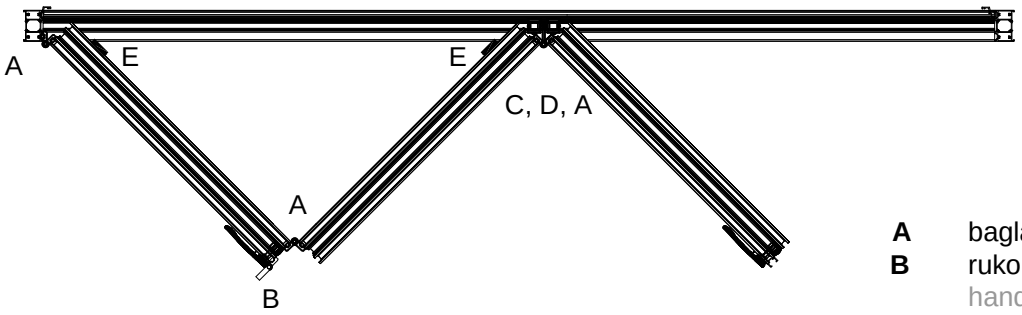

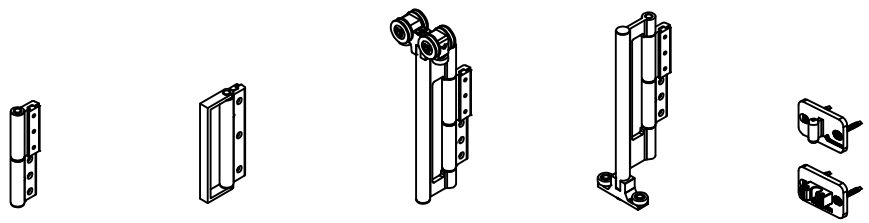

A-111.024 **B**-111.026 **C**-111.022 **D**-111.023 **E**-140.081

A baglama hinge
B rukohvat handrail
C mehanizam gornje vodilice mechanism of upper guide
D mehanizam donje pratilice mechanism of lower guide
E graničnik krila sash stopper

RASPORED MEHANIZAMA ZA OTVARANJE
OTVARANJE VANI
SCHEDULE MECHANISM FOR OPENING
OUTSIDE OPENING

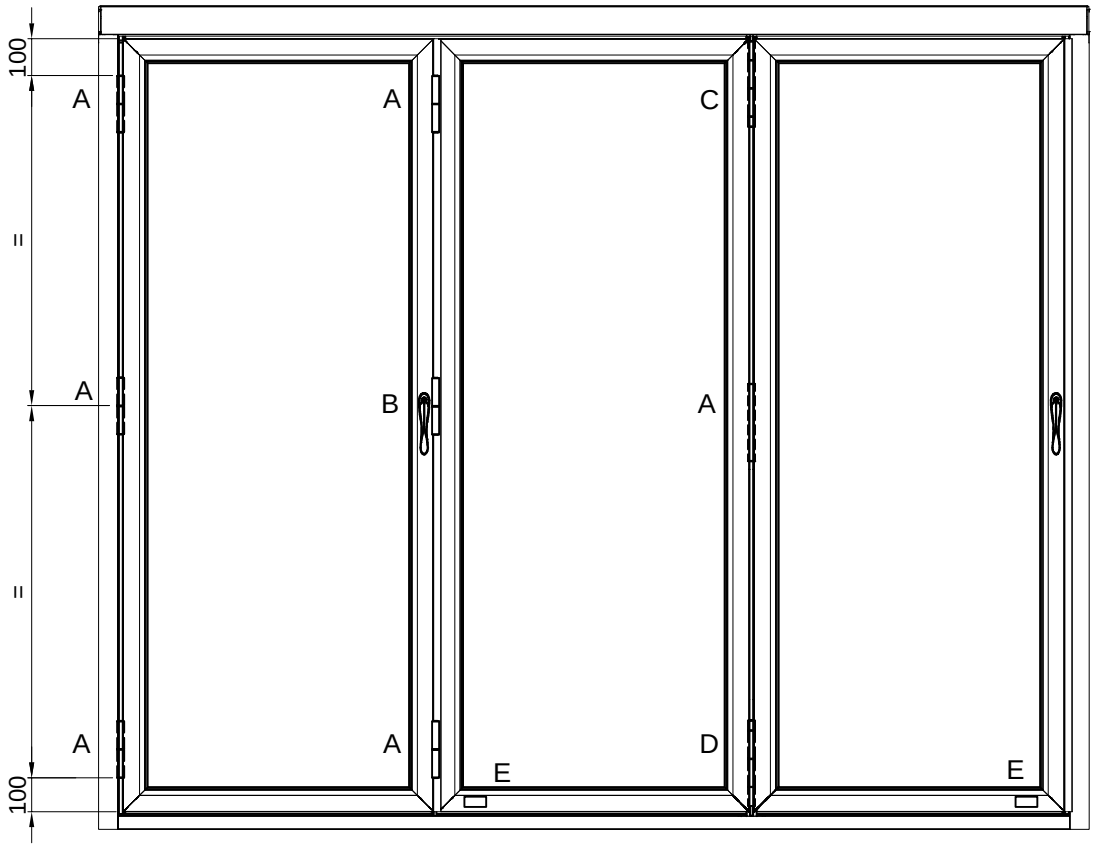

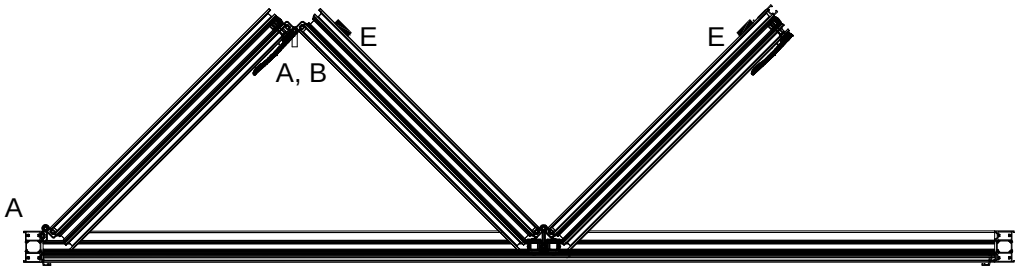

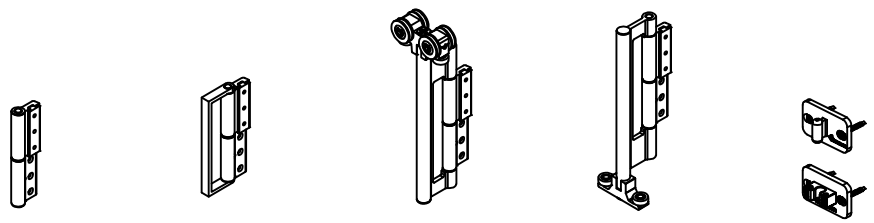

A-111.024 **B**-111.025 **C**-111.022 **D**-111.023 **E**-140.081

A baglama
hinge

B rukohvat sa baglamom
handrail with hinge

C mehanizam gornje vodilice
upper guide mechanism

D mehanizam donje pratilice
lower guide mechanism

E graničnik krila
sash stopper

DETALJ UGRADNJE GORNJEG I DONJEG MEHANIZMA
DETAIL INSTALATION UPPER AND LOWER MECHANISM

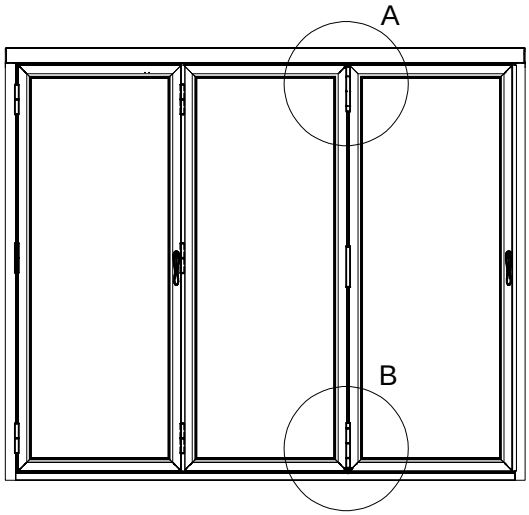

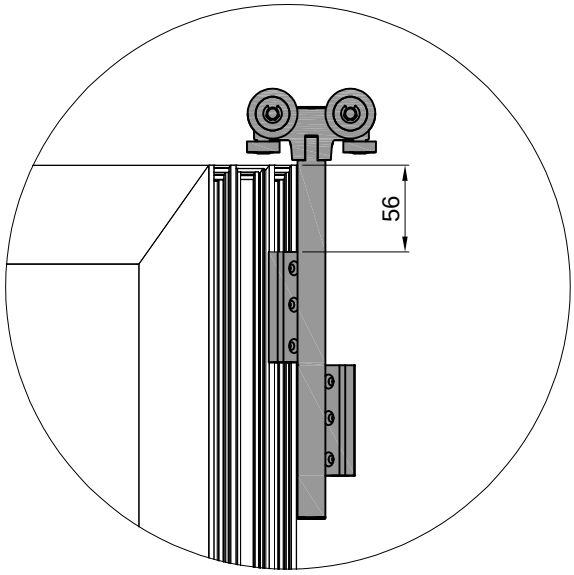

Detalj A
Detail A

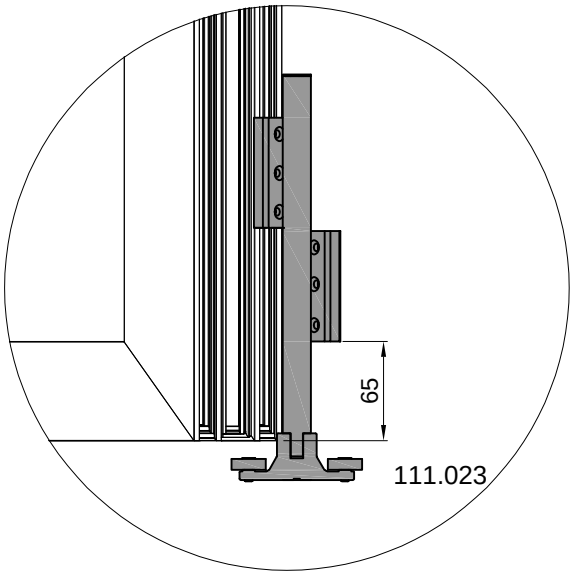

Detalj B
Detail B

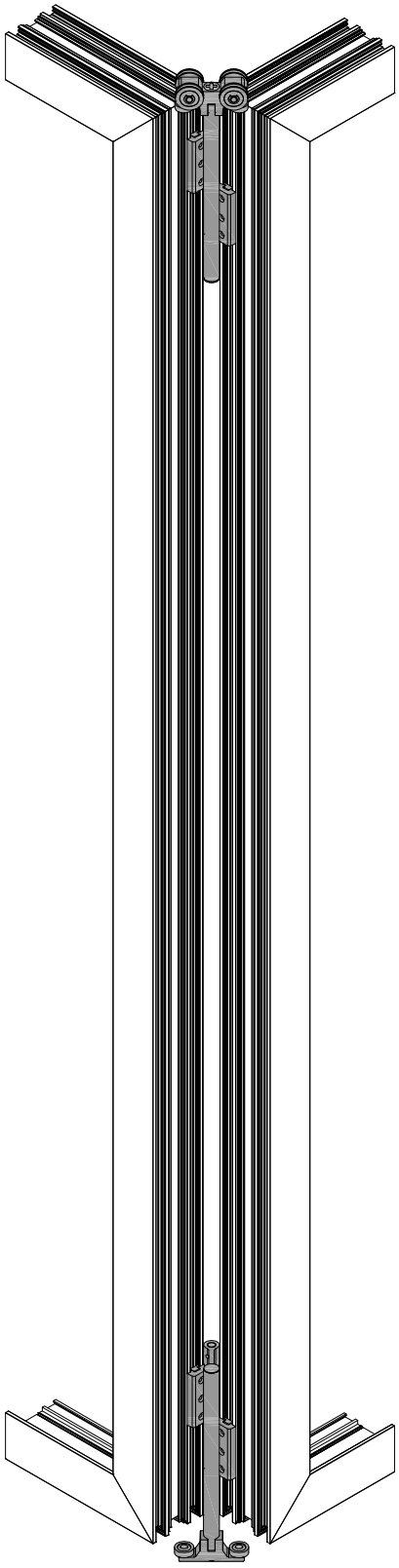

DETALJ UGRADNJE GORNJEG I DONJEG MEHANIZMA
DETAIL INSTALATION UPPER AND LOWER MECHANISM

Mehanizam gornje vodilice 111.022 se umeće u vodilicu prije njenog sastavljanja u okvir .
Mechanism of the rapid upper hinge 111.022 is insert into the upper guide rail before it is assembled into the frame

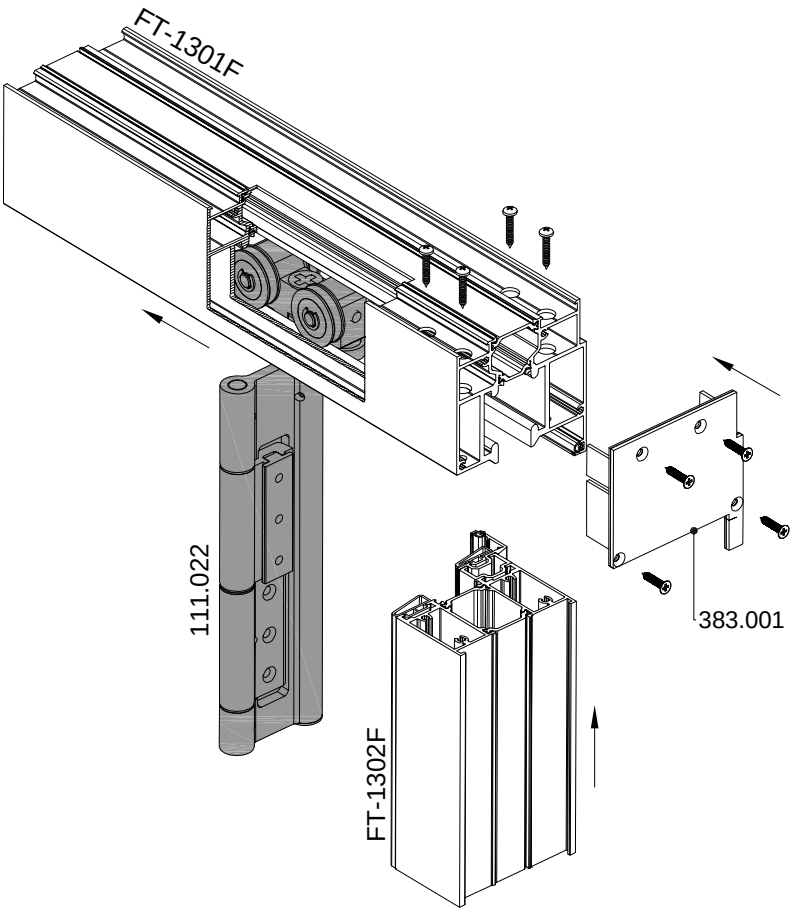

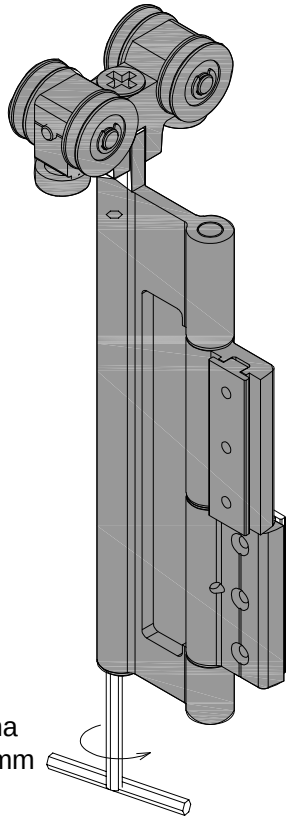

Podešavanje visine krila na kolicima imbus ključem 5mm (-/+ 5mm)
Adjustment height of the sash with allen wrench 5mm (-/+ 5)

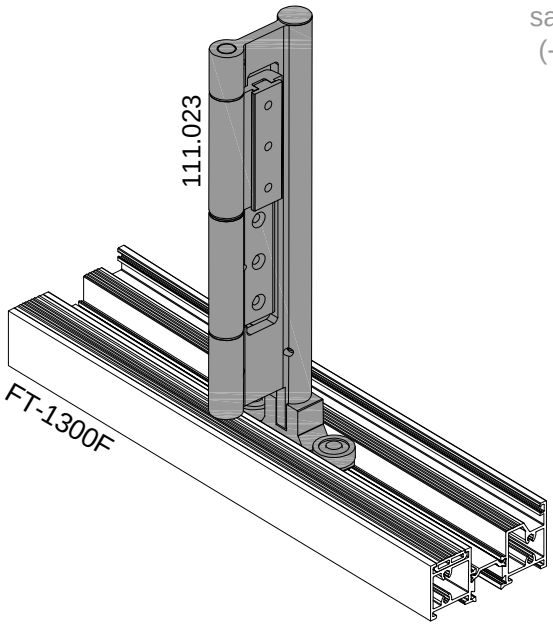

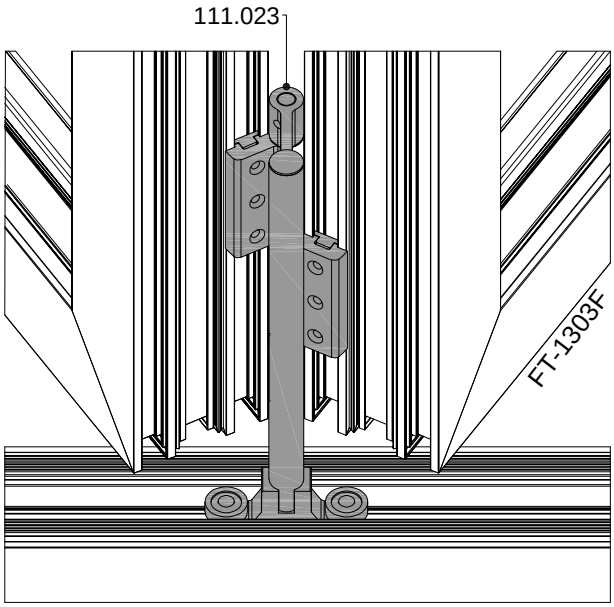

FT-1300F

Mehanizam donje pratilice 111.023 se umeće zajedno s okvirima krila.
Mechanism of the rapid lower hinge 111.023 is insert as along with frame of the sash

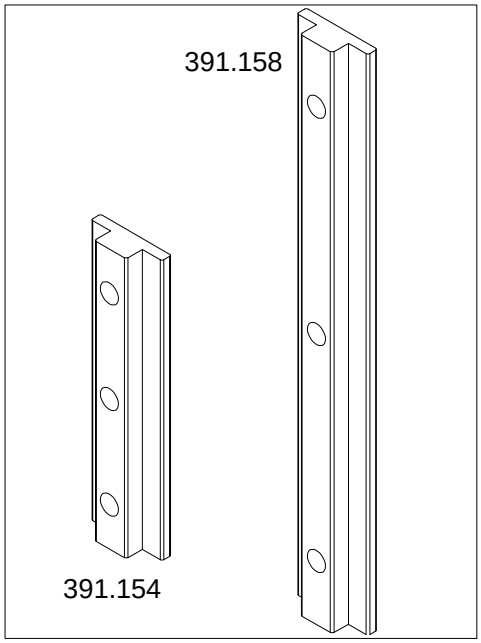

DETALJ UGRADNJE KONTRAPLOČICA 391.154 i 391.158
-Prije sastavljanja okvira rama i okvira prozora u za to predviđeni žlijeb umetnuti odgovarajući broj kontraploča.
-Kontraploče su sastavni dijelovi baglama ,rukohvata i mehanizama gornje vodilice i donje pratilice.

DETAIL OF INSTALLATION OF THE CONS PLATE 391.154 i 391.158
-Before assembling the frame and window frame into the provided groove, insert the appropriate number of cons plates.
-The cons plate are integral parts of the hinges, handrails and mechanisms of the rapid upper hinge and the rapid lower hinge.

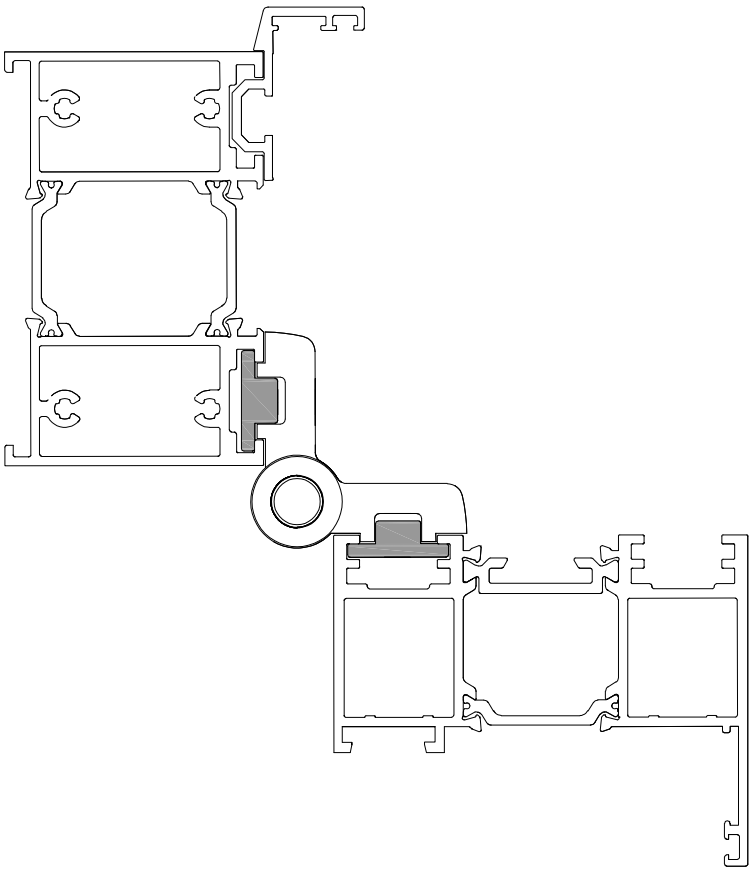

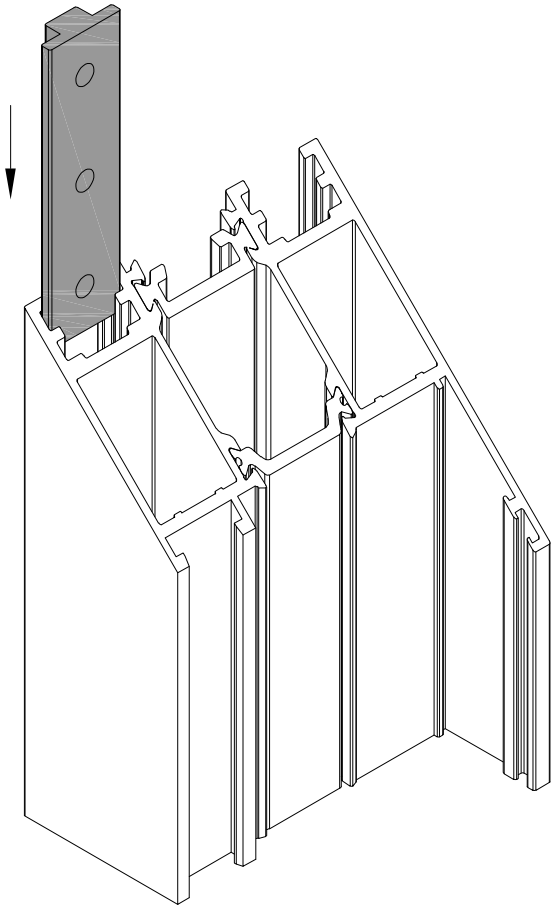

SPAJANJE PROFILA KUTNICIMA POD 90°
CONNECTING PROFILE WITH BRACKET AT ANGLE 90°

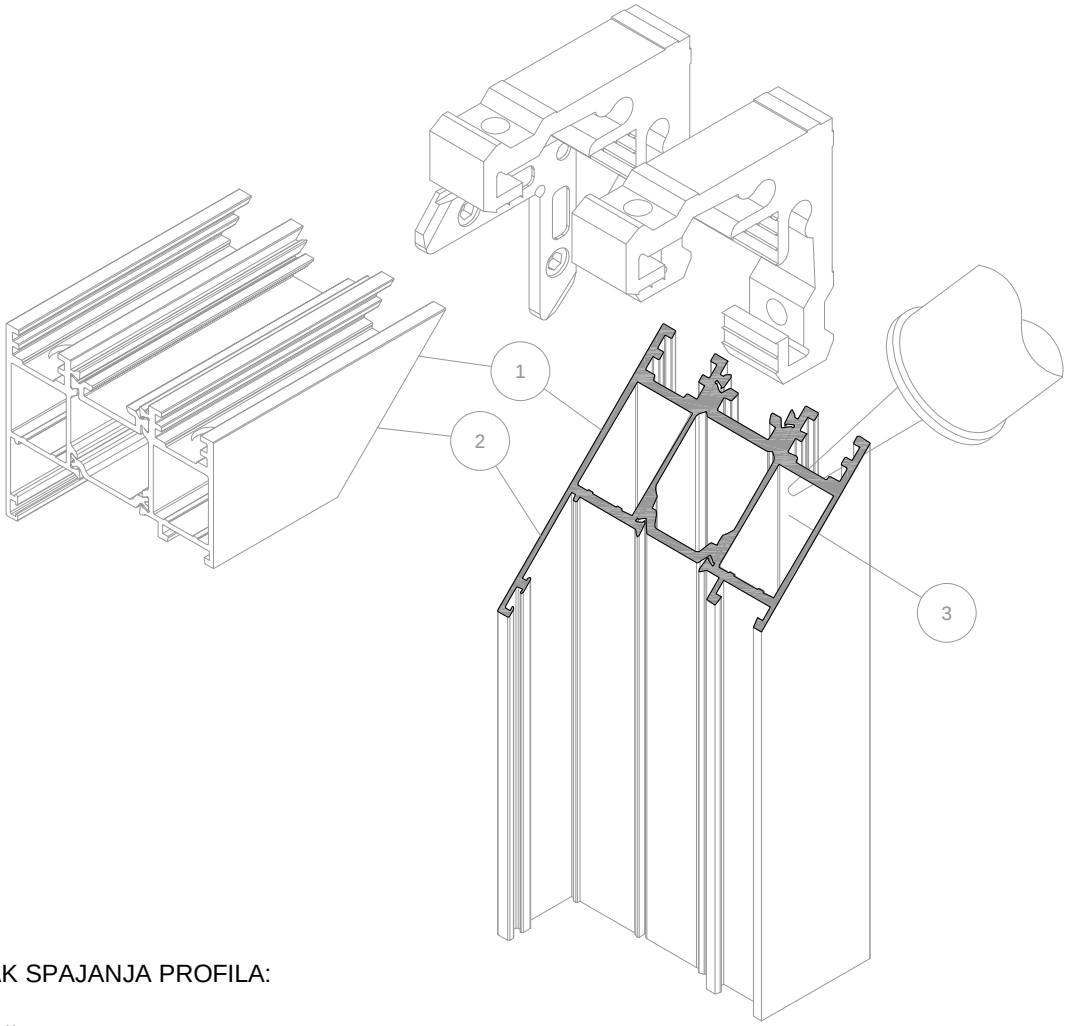

POSTUPAK SPAJANJA PROFILA:

1. Površine koje se spajaju-rezove očistiti i odmastiti prikladnim sredstvom /npr.Sika Remover 208; Wurth-kat.br.:892 130 30/.
2. Premazati površine koje se spajaju ljepilom za metal /npr. Sika Force 7851; Wurth-kat.br.:892 130 010/.
3. Ljepilo za metal ušpricati u komore za kutnik (po opsegu komore)
4. Profile s kutnicima izravnati i spojiti
5. Dio ljepila koji iscuri između rezova očistiti sredstvom za čišćenje i odmašćivanje /npr.Sika Remover 208; Wurth-kat.br.:892 130 30/.

NAPOMENA:

Ovaj postupak spajanja profila primjenjiv je za sve Feal-ove kutnike i njima odgovarajuće komore. Lijepljenjem rezova i kutnika ljepilima za metal osigurava se potrebna zrako- i vodonepropusnosti spoja kao i dodatna mehanička čvrstoća spoja.

PROFILE CONNECTION PROCEDURE:

1. Surfaces that are connecting - clean and degreased the cut with suitable products /e.g. Sika Remover 208; Wurth-kat. no.:892 130 30/.
2. Smear surfaces that are connecting with metal glue /e.g. Sika Force 7851; Wurth-kat.no.:892 130 010/.
3. Spurt metal glue into chambers for the corner bracket (on chamber circumference)
4. Level profiles with corner brackets and connect
5. Leaking glue that comes from the joints remove with ceaning nad degrease product /e.g. Sika Remover 208; Wurth-kat.no.:892 130 30/.

REMARK:

This profile connection procedure is applicable for all Feal corner brackets and their appropirate chambers. Gluing cuts and corners with metal glues provides necessary air and water tightness of the joint nad additional mechanical properties.

SPAJANJE PROFILA FT-1303F I FT-1305F VEZNICIMA
CONNECTION PROFILE FT-1303F AND FT-1305F WITH CONNECTORS

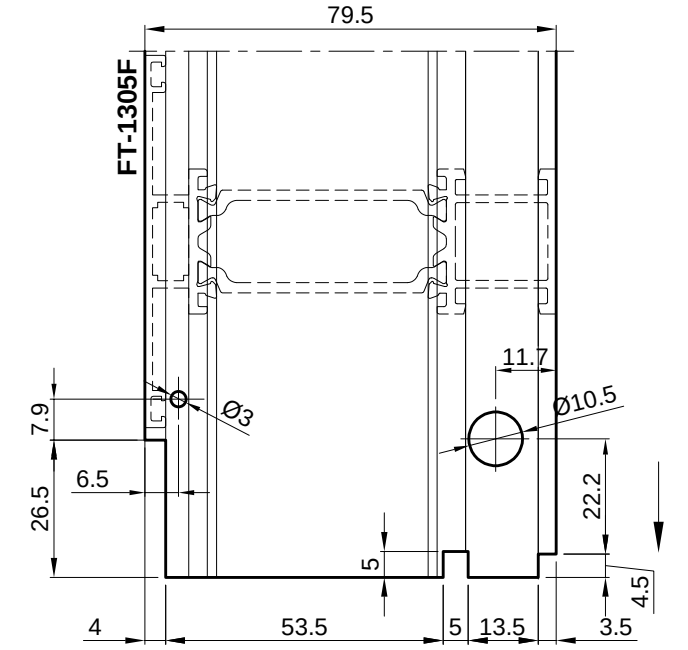

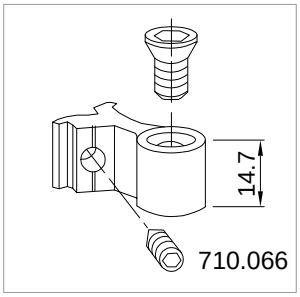

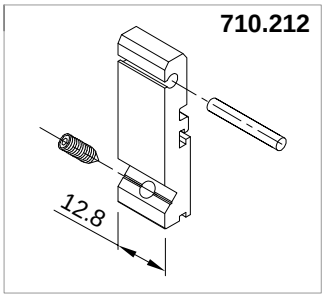

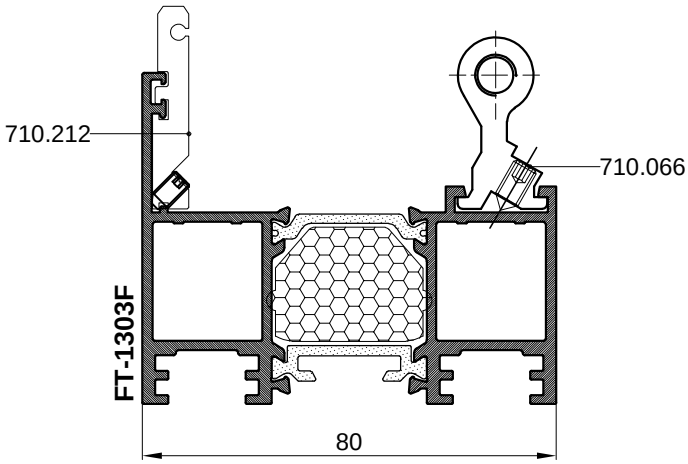

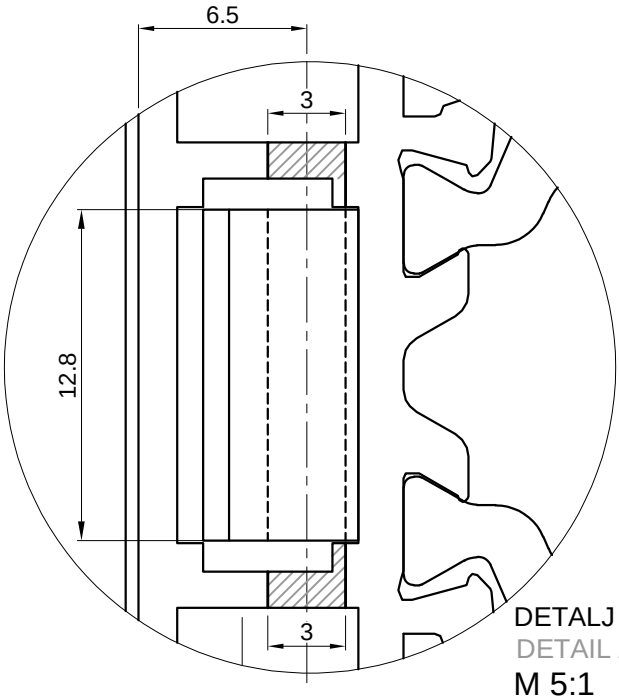

DETALJ A
DETAIL A
M 5:1

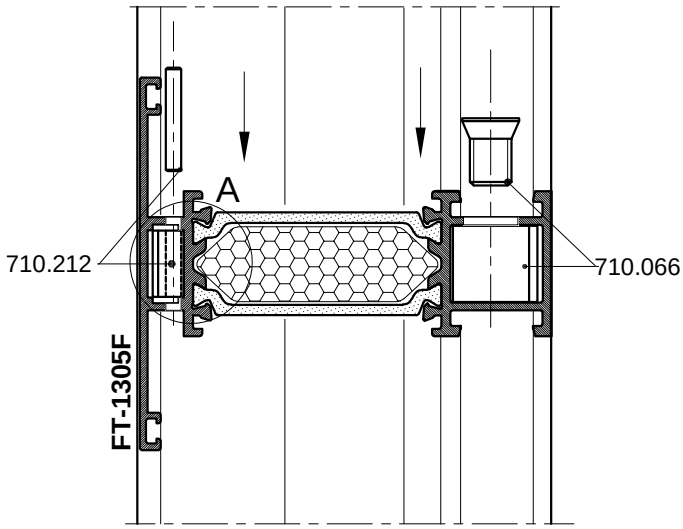

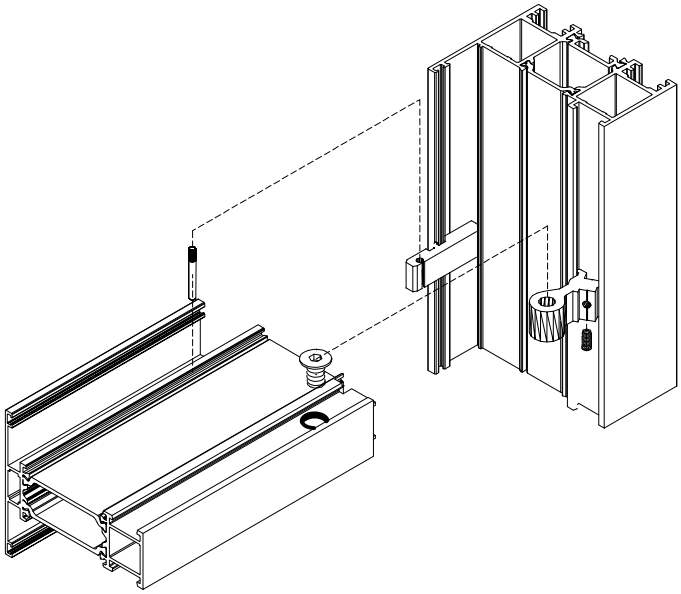

Obrada profila FT-1301F (profil gornje vodilice) za izmjenu mehanizma gornje vodilice 111.002
Processing of the FT-1301F profile (upper guide profile) for changing the upper guide mechanism 111.002

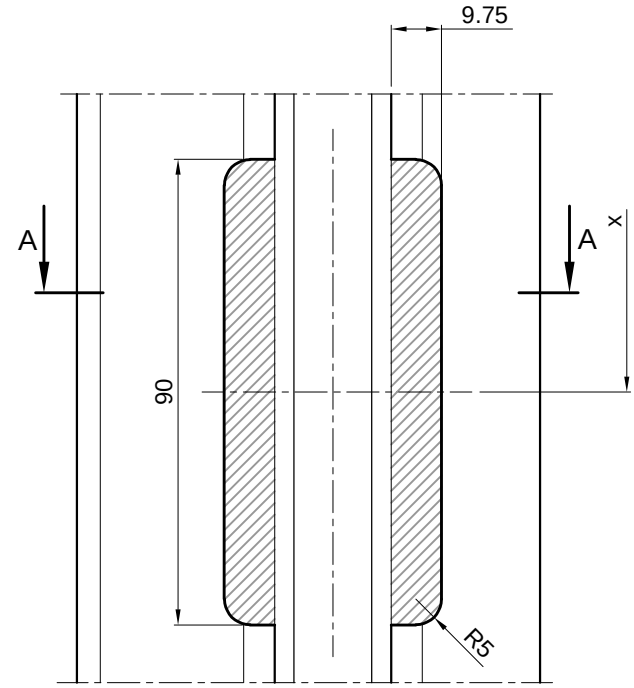

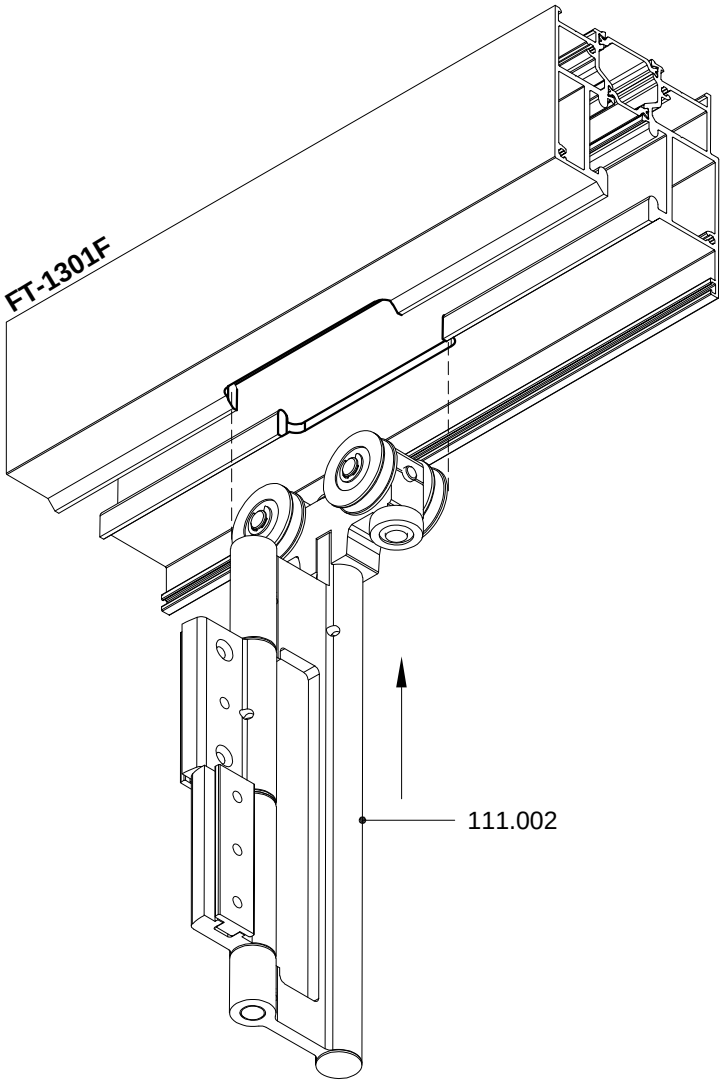

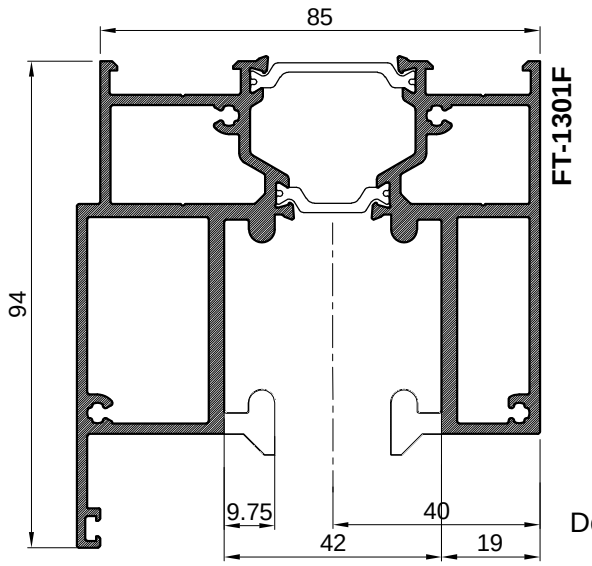

Detalj A--A

Položaj obrade - unutar mjere x
Processing position - within measure x

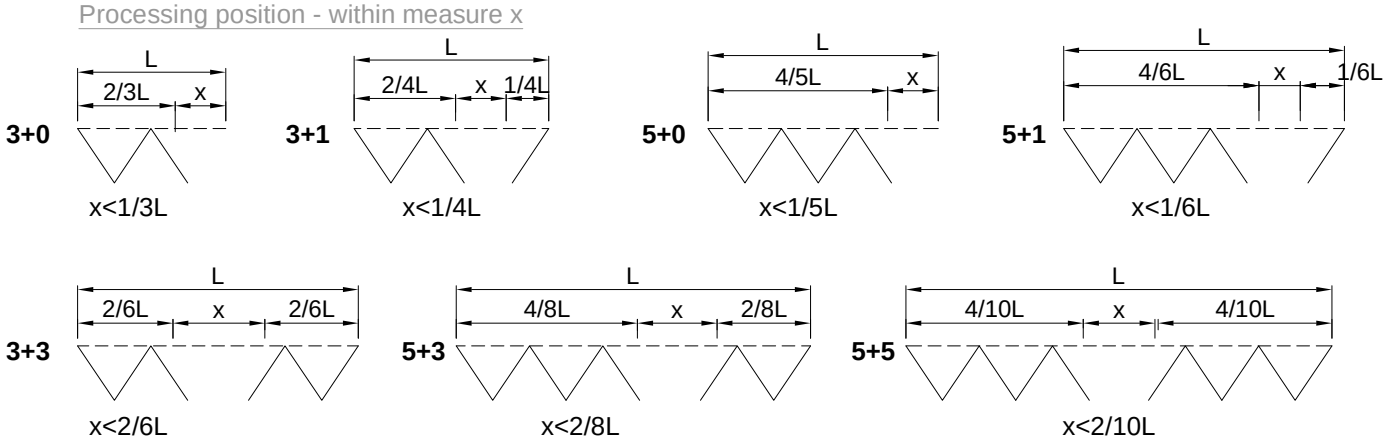

Rezne liste
Cutting lists

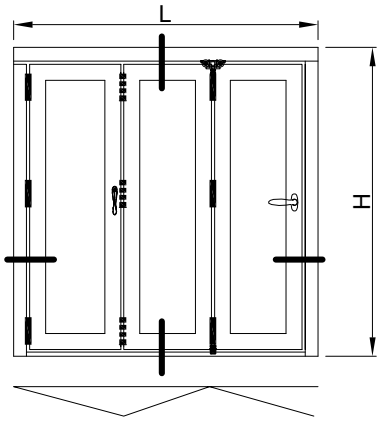

HARMO OTVARANJE 3+0
OTVARANJE UNUTRA
HARMO OPENING 3+0
INSIDE OPENING

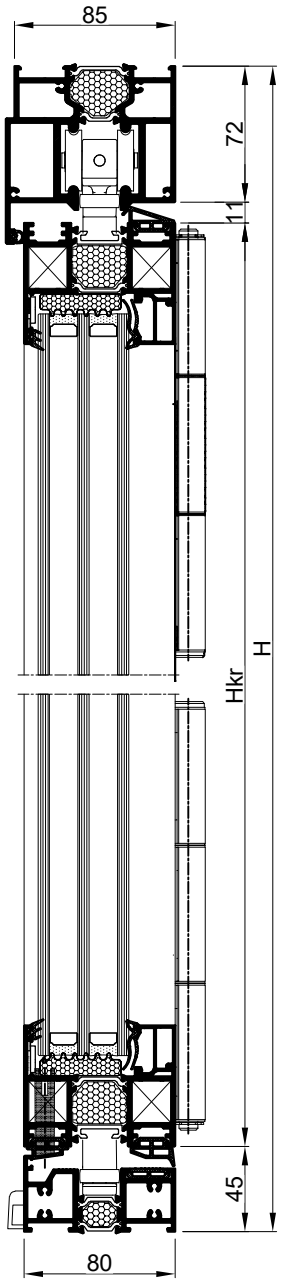

Profil Profile	**opis** description		**kom** pcs	**mjera** measure	**pilanje** cutting
FT-1300F	vodor.rama-dolje	horiz.frame-lower	1	L-90	90-90
FT-1301F	vodor.rama-gore	horiz.frame-upper	1	L-7	90-90
FT-1302F	okomiti pojas rama	mullion frame	2	H-72	90-90
FT-1303F	vodoravni profil krila	transom of sash	6	Lkr=L/3-54	45-45
FT-1303F	okomiti profil krila	mullion of sash	6	Hkr=H-128	45-45
F-1562	dodatni profil na krilu	auxiliary profile on sash	1	H-128	90-90
F-1562	dodatni profil na ramu	auxiliary profile on frame	1	H-108	90-90
F-1561	maska rama	mask frame	2	H-108	90-90
Z40-666	vodoravne lajsne (20.5 mm)	horizontal bead (20.5 mm)	6	Lkr-84	90-90
Z40-666	okomite lajsne (20.5 mm)	vertical bead (20.5 mm)	6	Hkr-128	90-90
F-1584	klizač	slider	2	Hkr	90-90

Vezni elementi Conn. elements	**opis** description		**kom** pcs
710.413	kutna spojnica krila	sash corner bracket	24
731.010	pomoćni kutnik krila	auxiliary sash corner bracket	12
383.001	bočni poklopac za FT-1301F	side cover for FT-1301F	1
360.009	odvodnja kapljevina -Monodrain	drainage -Monodrain	6
373.003	maska za drenažni otvor	drainage hole mask	2
363.069	umetak za F-1561	insert for F-1561	1
111.024	baglame	hinges	7
111.026	rukohvat	handrail	1
111.022	mehanizam gornje vodilice	upper guide mechanism	1
111.023	mehanizam donje pratilice	lower guide mechanism	1
140.088	brava	lock	2
105.007	ručka za bravu	handle for lock	1
383.002	zapinjač u profilu FT-1303F	rod end in profile FT-1303F	4
100.017	ručka za bravu (Roto)	handle for lock (Roto)	1
140.081	graničnik krila	sash stopper	2

Brtve Gaskets	**opis** description		**mjera** measure
341.011	brtva u g. vodilici, prema krilu	gasket in up. guide, towards sash	L
321.001	brtva u profilu F-1561	gasket in profile F-1561	2H
341.014	brtva na spoju, okomita	gasket on joint, vertical	14H
341.015	brtva na spoju, okomita(maska)	gasket on joint, vertical(mask)	2H
344.085	brtva u žlijebu donje vodilice	seal in groove of the lower guide	L
341.016	brtva krila prema gornjoj vodilici	sash seal towards upper guide	L
341.017	brtva krila prema d. vodilici,vani	sash seal towards l. guide, exterior	L
341.018	brtva krila prema d.vodilici,unutra	sash seal towards l. guide, interior	L
321.002	brtva za stakljenje, vanjska	gasket for glazing, exterior	2L+6H
311.003	brtva za stakljenje, unutarnja	gasket for glazing, interior	2L+6H

Staklo Glass	**opis** description		**kom** pcs	**mjera** measure
48 mm	IZO staklo	Insulation glass	3	Lkr-98 x Hkr-98

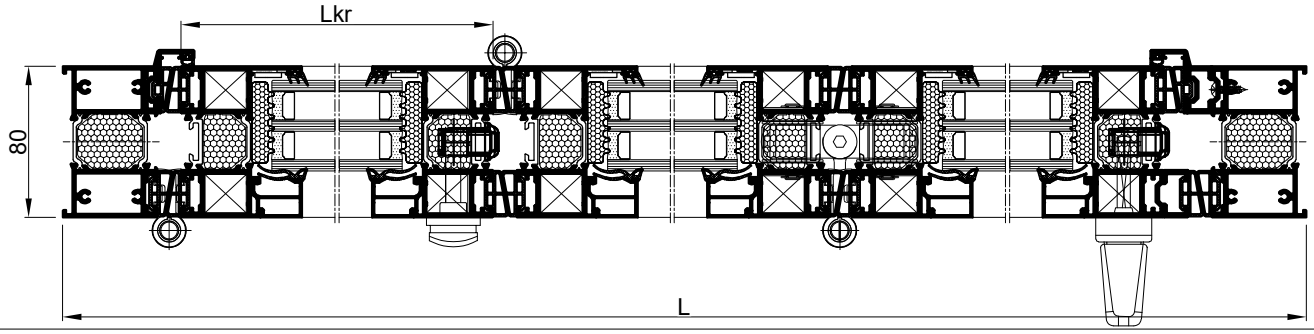

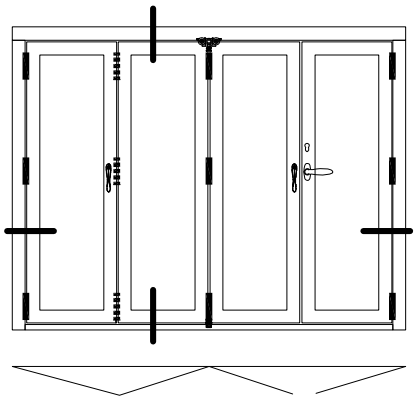

HARMO OTVARANJE 3+1
OTVARANJE UNUTRA
HARMO OPENING 3+1
INSIDE OPENING

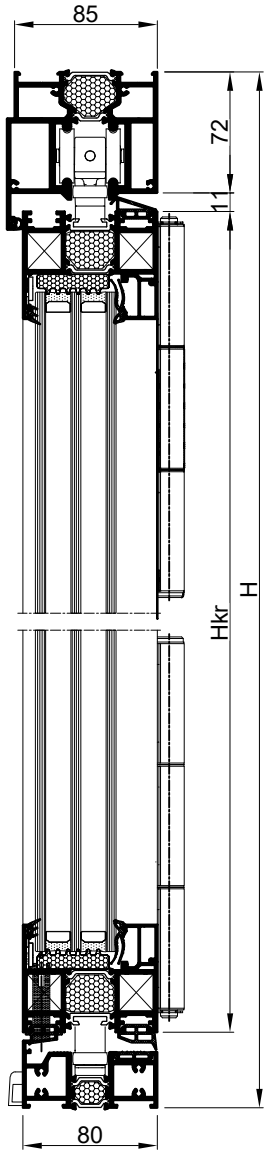

Profil Profile	**opis** description		**kom** pcs	**mjera** measure	**pilanje** cutting
FT-1300F	vodor.rama-dolje	horiz.frame-lower	1	L-90	90-90
FT-1301F	vodor.rama-gore	horiz.frame-upper	1	L-7	90-90
FT-1302F	okomiti pojas rama	mullion frame	2	H-72	90-90
FT-1303F	vodoravni profil krila	transom of sash	8	Lkr=L/4-44	45-45
FT-1303F	okomiti profil krila	mullion of sash	8	Hkr=H-128	45-45
F-1562	dodatni profil na krilu	auxiliary profile on sash	2	H-128	90-90
F-1561	maska rama	mask frame	2	H-108	90-90
F-1561	maska krila	mask sach	1	H-128	90-90
Z40-666	vodoravne lajsne (20.5 mm)	horizontal bead (20.5 mm)	8	Lkr-84	90-90
Z40-666	okomite lajsne (20.5 mm)	vertical bead (20.5 mm)	8	Hkr-128	90-90
F-1584	klizač	slider	3	Hkr	90-90

Vezni elementi Conn. elements	**opis** description		**kom** pcs
710.413	kutna spojnica krila	sash corner bracket	32
731.010	pomoćni kutnik krila	auxiliary sash corner bracket	16
383.001	maska profila FT-1301F	mask profile FT-1301F	1
360.009	odvodnja kapljevina -Monodrain	dreinage -Monodrain	8
373.003	maska za drenažni otvor	drainage hole mask	1
363.069	umetak za F-1561	insert for F-1561	2
111.024	baglame	hinges	10
111.026	rukohvat	handrail	1
111.022	mehanizam gornje vodilice	upper guide mechanism	1
111.023	mehanizam donje pratilice	lower guide mechanism	1
140.088	brava	lock	3
105.007	ručka za bravu	handle for lock	2
383.002	zapinjač u profilu FT-1303F	rod end in profile FT-1303F	6
100.017	ručka za bravu (Roto)	handle for lock (Roto)	1
140.081	graničnik krila	sash stopper	2

Brtve Gaskets	**opis** description		**mjera** measure
341.011	brtva u g. vodilici, prema krilu	gasket in up. guide, towards sash	L
321.001	brtva u profilu F-1561	gasket in profile F-1561	2H
341.014	brtva na spoju, okomita	gasket on joint, vertical	18H
341.015	brtva na spoju, okomita(maska)	gasket on joint, vertical(mask)	2H
344.085	brtva u žlijebu donje vodilice	seal in groove of lower guide	L
341.016	brtva krila prema gornjoj vodilici	sash seal towards upper guide	L
341.017	brtva krila prema d. vodilici,vani	sash seal towards l. guide, exterior	L
341.018	brtva krila prema d.vodilici,unutra	sash seal towards l.guide, interior	L
321.002	brtva za stakljenje, vanjska	gasket for glazing, exterior	2L+8H
311.003	brtva za stakljenje, unutarnja	gasket for glazing, interior	2L+8H

Staklo Glass	**opis** description			**mjera** measure
48 mm	IZO staklo	Insulation glass	4	Lkr-98 x Hkr-98

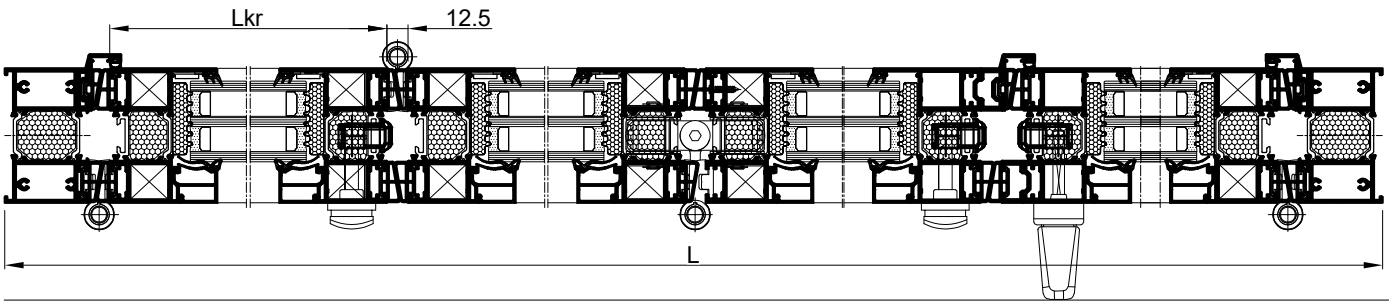

TERMO 80 HD

Rezne liste
Cutting lists

Profil Profile	opis description		kom pcs	mjera measure	pilanje pilanje
FT-1300F	vodor.rama-dolje	horiz.frame-lower	1	L-90	90-90
FT-1301F	vodor.rama-gore	horiz.frame-upper	1	L-7	90-90
FT-1302F	okomiti pojas rama	mullion frame	2	H-72	90-90
FT-1303F	vodoravni profil krila	transom of sash	10	Lkr=L/5-37.5	45-45
FT-1303F	okomiti profil krila	mullion of sash	10	Hkr=H-128	45-45
F-1562	dodatni profil na krilu	auxiliary profile on sash	1	H-128	90-90
F-1562	dodatni profil na ramu	ass. profile on frame	1	H-108	90-90
F-1561	maska rama	mask frame	2	H-108	90-90
Z40-666	vodoravne lajsne (20.5 mm)	horizontal bead (20.5 mm)	10	Lkr-84	90-90
Z40-666	okomite lajsne (20.5 mm)	vertical bead (20.5 mm)	10	Hkr-128	90-90
F-1584	klizač	slider	3	Hkr	90-90

Vezni elementi Conn. elements	opis description		kom pcs
710.413	kutna spojnica krila	sash corner bracket	40
731.010	pomoćni kutnik krila	auxiliary sash corner bracket	20
383.001	maska profila FT-1301F	mask profile FT-1301F	1
360.009	odvodnja kapljevina -Monodrain	drainage -Monodrain	10
373.003	maska za drenažni otvor	drainage hole mask	3
363.069	umetak za F-1561	insert for F-1561	1
111.024	baglame	hinges	11
111.026	rukohvat	handrail	2
111.022	mehanizam gornje vodilice	upper guide mechanism	2
111.023	mehanizam donje pratilice	lower guide mechanism	2
140.088	brava	lock	3
105.007	ručka za bravu	handle for lock	2
383.002	zapinjač u profilu FT-1303F	rod end in profile FT-1303F	6
100.017	ručka za bravu (Roto)	handle for lock (Roto)	1
140.081	graničnik krila	sash stopper	4

Brtve Gaskets	opis description		mjera measure
341.011	brtva u g. vodilici, prema krilu	gasket in up. guide, towards sash	L
321.001	brtva u profilu F-1561	gasket in profile F-1561	2H
341.014	brtva na spoju, okomita	gasket on joint, vertical	22H
341.015	brtva na spoju, okomita(maska)	gasket on joint, vertical(mask)	2H
344.085	brtva u žlijebu donje vodilice	seal in groove of lower guide	L
341.016	brtva krila prema gornjoj vodilici	sash seal towards upper guide	L
341.017	brtva krila prema d. vodilici,vani	sash seal towards l. guide,exterior	L
341.018	brtva krila prema d.vodilici,unutra	sash seal towards l. guide, interior	L
321.002	brtva za stakljenje, vanjska	gasket for glazing, exterior	2L+10H
311.003	brtva za stakljenje, unutarnja	gasket for glazing, interior	2L+10H

Staklo Glass	opis description			mjera measure
48 mm	IZO staklo	Insulation glass	5	Lkr-98 x Hkr-98

HARMO OTVARANJE 5+0
OTVARANJE UNUTRA
HARMO OPENING 5+0
INSIDE OPENING

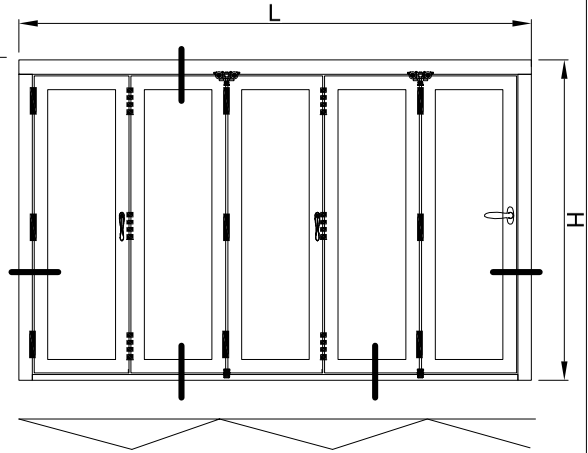

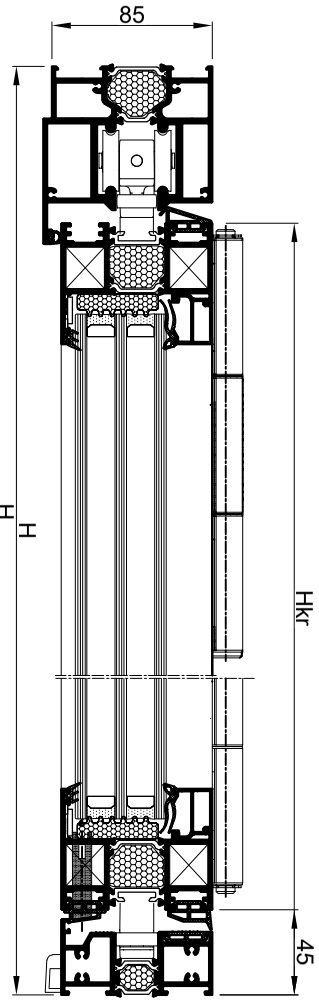

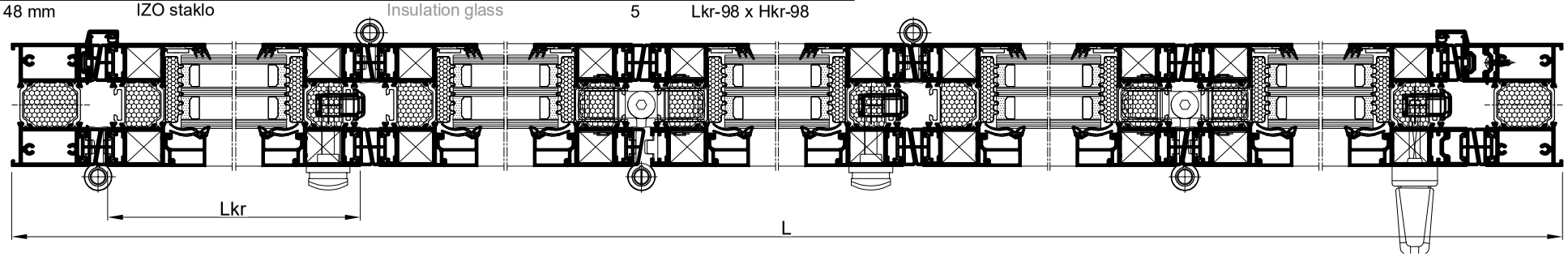

TERMO 80 HD

Rezne liste
Cutting lists

HARMO OTVARANJE 5+1
OTVARANJE UNUTRA
HARMO OPENING 5+1
INSIDE OPENING

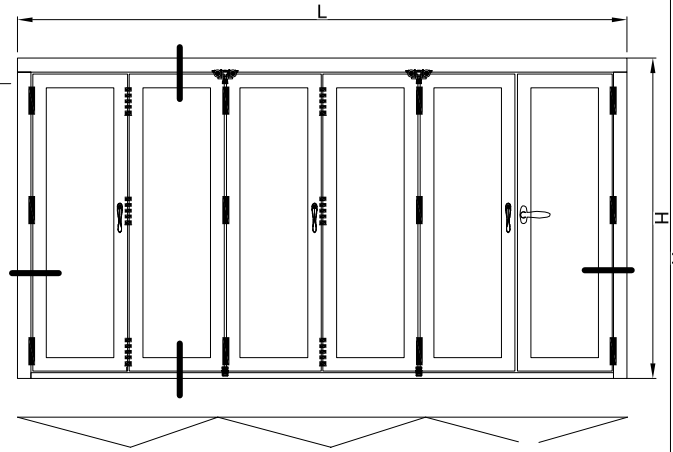

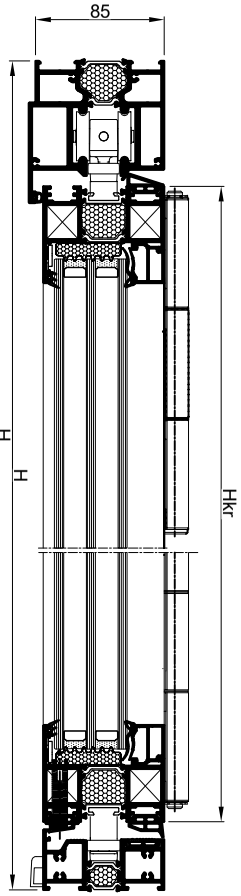

Profil Profile	opis description		kom pcs	mjera measure	pilanje cutting
FT-1300F	vodor.rama-dolje	horiz.frame-lower	1	L-90	90-90
FT-1301F	vodor.rama-gore	horiz.frame-upper	1	L-7	90-90
FT-1302F	okomiti pojas rama	mullion frame	2	H-72	90-90
FT-1303F	vodoravni profil krila	transom of sash	12	Lkr=L/6-33.5	45-45
FT-1303F	okomiti profil krila	mullion of sash	12	Hkr=H-128	45-45
F-1562	dodatni profil na krilu	ass. profile on sash	2	H-128	90-90
F-1561	maska rama	mask frame	2	H-108	90-90
F-1561	maska krila	mask sach	1	H-128	90-90
Z40-666	vodoravne lajsne (20.5 mm)	horizontal bead (20.5 mm)	12	Lkr-84	90-90
Z40-666	okomite lajsne (20.5 mm)	vertical bead (20.5 mm)	12	Hkr-128	90-90
F-1584	klizač	slider	4	Hkr	90-90

Vezni elementi Conn. elements	opis description		kom pcs
710.413	kutna spojnica krila	sash corner bracket	48
731.010	pomoćni kutnik krila	auxiliary sash corner bracket	24
383.001	maska profila FT-1301F	mask profile FT-1301F	1
360.009	odvodnja kapljevina -Monodrain	drainage -Monodrain	12
373.003	maska za drenažni otvor	drainage hole mask	3
363.069	umetak za F-1561	insert for F-1561	2
111.024	baglame	hinges	14
111.026	rukohvat	handrail	2
111.022	mehanizam gornje vodilice	upper guide mechanism	2
111.023	mehanizam donje pratilice	lower guide mechanism	2
140.088	brava	lock	4
105.007	ručka za bravu	handle for lock	3
383.002	zapinjač u profilu FT-1303F	rod end in profile FT-1303F	8
100.017	ručka za bravu (Roto)	handle for lock (Roto)	1
140.081	graničnik krila	sash stopper	4

Brtve Gaskets	opis description		mjera measure
341.011	brtva u g. vodilici, prema krilu	gasket in up. guide, towards sash	L
321.001	brtva u profilu F-1561	gasket in profile F-1561	2H
341.014	brtva na spoju, okomita	gasket on joint, vertical	26H
341.015	brtva na spoju, okomita(maska)	gasket on joint, vertical(mask)	2H
344.085	brtva u žlijebu donje vodilice	seal in groove of lower guide	L
341.016	brtva krila prema gornjoj vodilici	sash seal towards upper guide	L
341.017	brtva krila prema d. vodilici,vani	sash seal towards l. guide, exterior	L
341.018	brtva krila prema d.vodilici,unutra	sash seal towards l. guide, interior	L
321.002	brtva za stakljenje, vanjska	gasket for glazing, exterior	2L+12H
311.003	brtva za stakljenje, unutarnja	gasket for glazing, interior	2L+12H

Staklo Glass	opis description			mjera measure
48 mm	IZO staklo	Insulation glass	6	Lkr-98 x Hkr-98

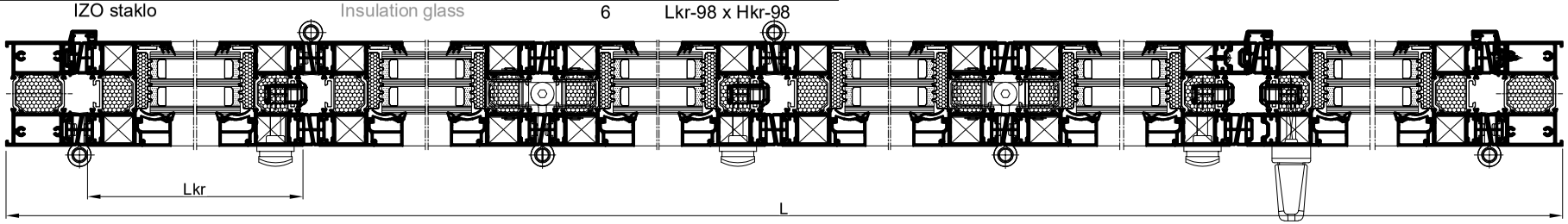

TERMO 80 HD

Rezne liste
Cutting lists

HARMO OTVARANJE 3+3
OTVARANJE UNUTRA
HARMO OPENING 3+3
INSIDE OPENING

Profil Profile	opis description		kom pcs	mjera measure	pilanje cutting
FT-1300F	vodor.rama-dolje	horiz.frame-lower	1	L-90	90-90
FT-1301F	vodor.rama-gore	horiz.frame-upper	1	L-7	90-90
FT-1302F	okomiti pojas rama	mullion frame	2	H-72	90-90
FT-1303F	vodoravni profil krila	transom of sash	12	**Lkr=L/6-33.5**	45-45
FT-1303F	okomiti profil krila	mullion of sash	12	Hkr=H-128	45-45
F-1562	dodatni profil na krilu	ass. profile on sash	2	H-128	90-90
F-1561	maska rama	mask frame	2	H-108	90-90
F-1561	maska krila	mask sach	1	H-128	90-90
Z40-666	vodoravne lajsne (20.5 mm)	horizontal bead (20.5 mm)	12	Lkr-84	90-90
Z40-666	okomite lajsne (20.5 mm)	vertical bead (20.5 mm)	12	Hkr-128	90-90
F-1584	klizač	slider	4	Hkr	90-90

Vezni elementi Conn. elements	opis description		kom pcs
710.413	kutna spojnica krila	sash corner bracket	48
731.010	pomoćni kutnik krila	auxiliary sash corner bracket	24
383.001	maska profila FT-1301F	mask profile FT-1301F	1
360.009	odvodnja kapljevina -Monodrain	drainage -Monodrain	12
373.003	maska za drenažni otvor	drainage hole mask	3
363.069	umetak za F-1561	insert for F-1561	2
111.024	baglame	hinges	14
111.026	rukohvat	handrail	2
111.022	mehanizam gornje vodilice	upper guide mechanism	2
111.023	mehanizam donje pratilice	lower guide mechanism	2
140.088	brava	lock	4
105.007	ručka za bravu	handle for lock	3
383.002	zapinjač u profilu FT-1303F	rod end in profile FT-1303F	8
102.019	ručka za bravu (GU)	handle for lock	1
431.921	vijak za M5x60 DIN 965	screw M5x60 DIN 965	2
140.081	graničnik krila	sash stopper	4

Brtve Gaskets	opis description		mjera measure
341.011	brtva u g. vodilici, prema krilu	gasket in up. guide, towards sash	L
321.001	brtva u profilu F-1561	gasket in profile F-1561	2H
341.014	brtva na spoju, okomita	gasket on joint, vertical	26H
341.015	brtva na spoju, okomita(maska)	gasket on joint, vertical(mask)	2H
344.085	brtva u žlijebu donje vodilice	seal in groove of lower guide	L
341.016	brtva krila prema gornjoj vodilici	sash seal towards upper guide	L
341.017	brtva krila prema d. vodilici,vani	sash seal towards l. guide, exterior	L
341.018	brtva krila prema d.vodilici,unutra	sash seal towards l. guide, interior	L
321.002	brtva za stakljenje, vanjska	gasket for glazing, exterior	2L+12H
311.003	brtva za stakljenje, unutarnja	gasket for glazing, interior	2L+12H

Staklo Glass	opis description			mjera measure
48 mm	IZO staklo	Insulation glass	6	Lkr-98 x Hkr-98

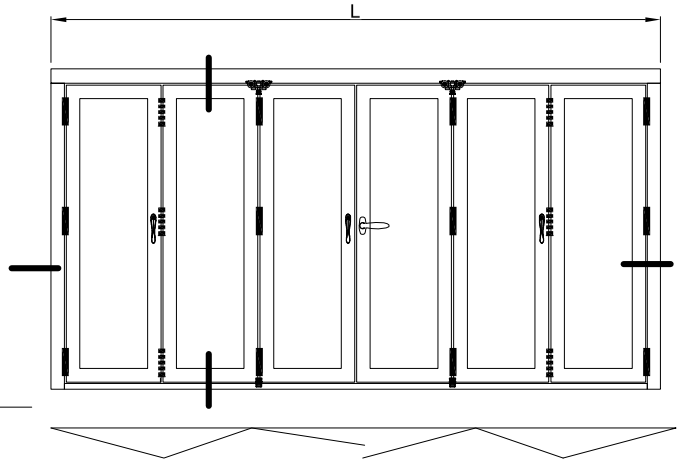

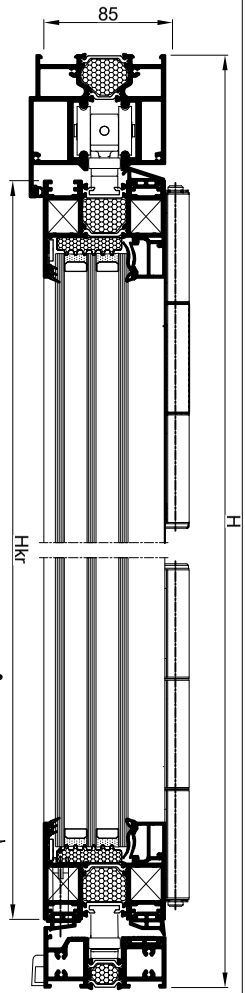

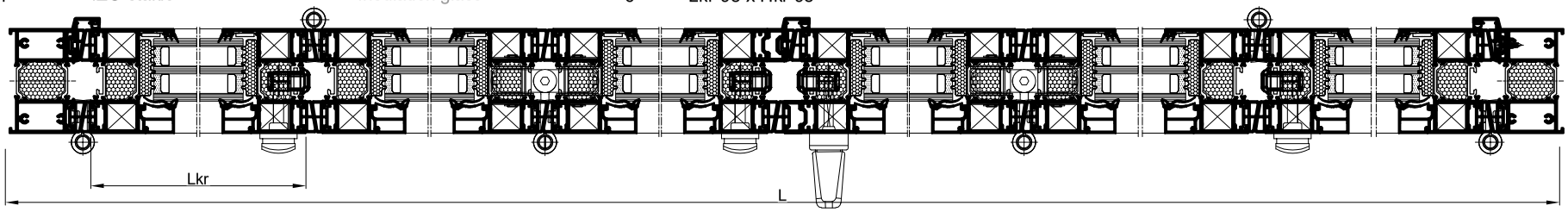

09.2018

304.12.006

TERMO 80 HD

Rezne liste
Cutting lists

HARMO OTVARANJE 5+3
OTVARANJE UNUTRA
HARMO OPENING 5+3
INSIDE OPENING

Profil Profile	opis description		kom pcs	mjera measure	pilanje cutting
FT-1300F	vodor.rama-dolje	horiz.frame-lower	1	L-90	90-90
FT-1301F	vodor.rama-gore	horiz.frame-upper	1	L-7	90-90
FT-1302F	okomiti pojas rama	mullion frame	2	H-72	90-90
FT-1303F	vodoravni profil krila	transom of sash	16	Lkr=L/8-28	45-45
FT-1303F	okomiti profil krila	mullion of sash	16	Hkr=H-128	45-45
F-1562	dodatni profil na krilu	ass. profile on sash	2	H-128	90-90
F-1561	maska rama	mask frame	2	H-108	90-90
F-1561	maska krila	mask sach	1	H-128	90-90
Z40-666	vodoravne lajsne (20.5 mm)	horizontal bead (20.5 mm)	16	Lkr-84	90-90
Z40-666	okomite lajsne (20.5 mm)	vertical bead (20.5 mm)	16	Hkr-128	90-90
F-1584	klizač	slider	5	Hkr	90-90

Vezni elementi Conn. elements	opis description		kom pcs
710.413	kutna spojnica krila	sash corner bracket	64
731.010	pomoćni kutnik krila	auxiliary sash corner bracket	32
383.001	maska profila FT-1301F	mask profile FT-1301F	1
360.009	odvodnja kapljevina -Monodrain	drainage -Monodrain	16
373.003	maska za drenažni otvor	drainage hole mask	4
363.069	umetak za F-1561	insert for F-1561	2
111.024	baglame	hinges	18
111.026	rukohvat	handrail	3
111.022	mehanizam gornje vodilice	upper guide mechanism	3
111.023	mehanizam donje pratilice	lower guide mechanism	3
140.088	brava	lock	5
105.007	ručka za bravu	handle for lock	4
383.002	zapinjač u profilu FT-1303F	rod end in profile FT-1303F	10
100.017	ručka za bravu (Roto)	handle for lock (Roto)	1
140.081	graničnik krila	sash stopper	6

Brtve Gasket	opis description		mjera measure
341.011	brtva u g. vodilici, prema krilu	gasket in u. guide, towards sash	L
321.001	brtva u profilu F-1561	gasket in profile F-1561	2H
341.014	brtva na spoju, okomita	gasket on joint, vertical	34H
341.015	brtva na spoju, okomita(maska)	gasket on joint, vertical(mask)	2H
344.085	brtva u žlijebu donje vodilice	seal in groove of lower guide	L
341.016	brtva krila prema gornjoj vodilici	sash gasket towards upper guide	L
341.017	brtva krila prema d. vodilici,vani exterior	sash seal towards l. guide,	L
341.018	brtva krila prema d.vodilici,unutra	sash seal towards l. guide, interior	L
321.002	brtva za stakljenje, vanjska	gasket for glazing, exterior	2L+16H
311.003	brtva za stakljenje, unutarnja	gasket for glazing, interior	2L+16H

Staklo Glass	opis description			mjera measure
48 mm	IZO staklo	Insulation glass	8	Lkr-98 x Hkr-98

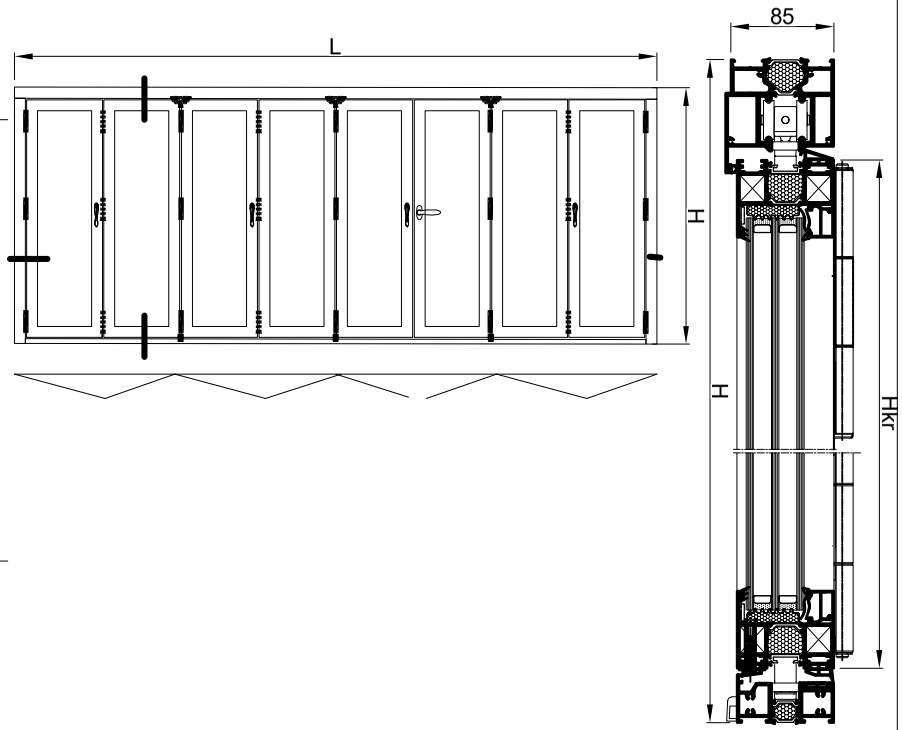

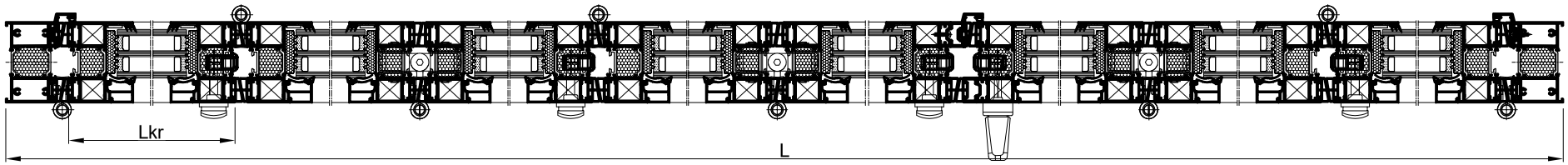

FEAL

TERMO 80 HD

Rezne liste
Cutting lists

Profil Profile	opis description		kom pcs	mjera measure	pilanje cutting
FT-1300F	vodor.rama-dolje	horiz.frame-lower	1	L-90	90-90
FT-1301F	vodor.rama-gore	horiz.frame-upper	1	L-7	90-90
FT-1302F	okomiti pojas rama	mullion frame	2	H-72	90-90
FT-1303F	vodoravni profil krila	transom of sash	20	Lkr=L/10-25	45-45
FT-1303F	okomiti profil krila	mullion of sash	20	Hkr=H-128	45-45
F-1562	dodatni profil na krilu	ass. profile on sash	2	H-128	90-90
F-1561	maska rama	mask frame	2	H-108	90-90
F-1561	maska krila	mask sach	1	H-128	90-90
Z40-666	vodoravne lajsne (20.5 mm)	horizontal bead (20.5 mm)	20	Lkr-84	90-90
Z40-666	okomite lajsne (20.5 mm)	vertical bead (20.5 mm)	20	Hkr-128	90-90
F-1584	klizač	slider	6	Hkr	90-90

Vezni elementi Conn. elements	opis description		kom pcs
710.413	kutna spojnica krila	sash corner bracket	80
731.010	pomoćni kutnik krila	auxiliary sash corner bracket	40
383.001	maska profila FT-1301F	mask profile FT-1301F	1
360.009	odvodnja kapljevina -Monodrain	drainage -Monodrain	20
373.003	maska za drenažni otvor	drainage hole mask	5
363.069	umetak za F-1561	insert for F-1561	2
111.024	baglame	hinges	22
111.026	rukohvat	handrail	4
111.022	mehanizam gornje vodilice	upper guide mechanism	4
111.023	mehanizam donje pratilice	lower guide mechanism	4
140.088	brava	lock	6
105.007	ručka za bravu	handle for lock	5
383.002	zapinjač u profilu FT-1303F	rod end in profile FT-1303F	12
100.017	ručka za bravu (Roto)	handle for lock (Roto)	1
140.081	graničnik krila	sash stopper	8

Brtve Gaskets	opis description		mjera measure
341.011	brtva u g. vodilici, prema krilu	gasket in up. guide, towards sash	L
321.001	brtva u profilu F-1561	gasket in profile F-1561	2H
341.014	brtva na spoju, okomita	gasket on joint, vertical	42H
341.015	brtva na spoju, okomita(maska)	gasket on joint, vertical(mask)	2H
344.085	brtva u žlijebu donje vodilice	gasket in groove of lower guide	L
341.016	brtva krila prema gornjoj vodilici	sash seal towards upper guide	L
341.017	brtva krila prema d. vodilici,vani	sash seal towards l. guide, exterior	L
341.018	brtva krila prema d.vodilici,unutra	sash seal towards l. guide, interior	L
321.002	brtva za stakljenje, vanjska	gasket for glazing, exterior	2L+20H
311.003	brtva za stakljenje, unutarnja	gasket for glazing, interior	2L+20H

Staklo Glass	opis description			mjera measure
48 mm	IZO staklo	Insulation glass	10	Lkr-98 x Hkr-98

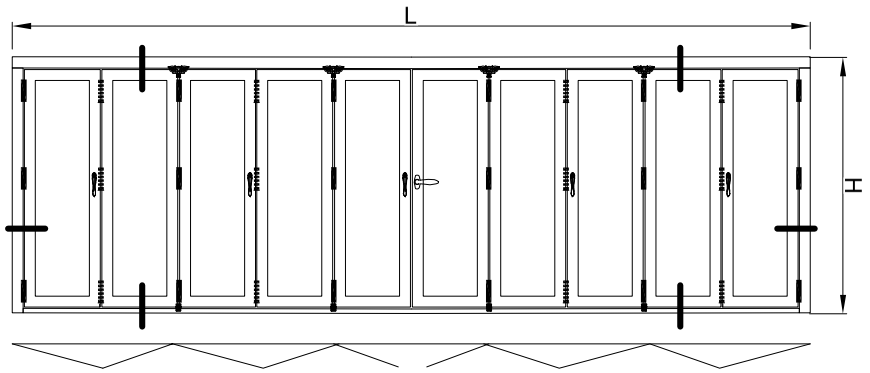

HARMO OTVARANJE 5+5
OTVARANJE UNUTRA
HARMO OPENING 5+5
INSIDE OPENING

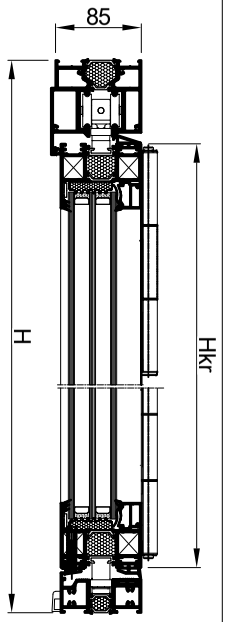

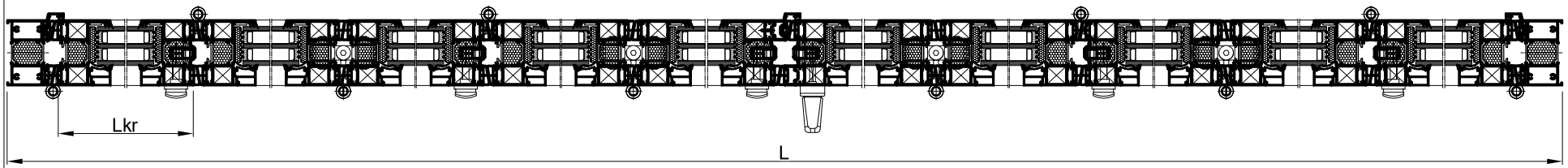

09.2018

304.12.008

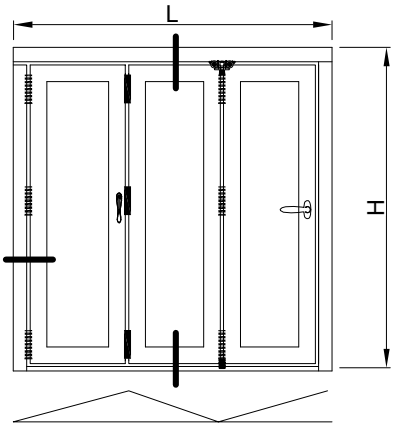

HARMO OTVARANJE 3+0
OTVARANJE VANI
HARMO OPENING 3+0
OUTSIDE OPENING

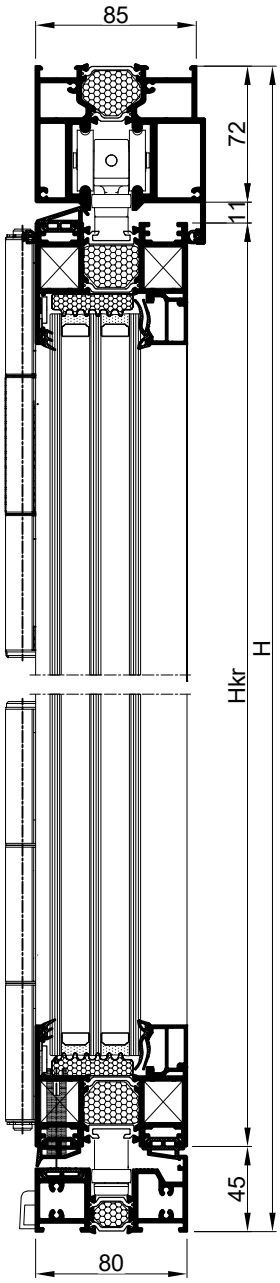

Profil Profile	**opis** description		**kom** pcs	**mjera** measure	**pilanje** cutting
FT-1300F	vodor.rama-dolje	horiz.frame-lower	1	L-90	90-90
FT-1301F	vodor.rama-gore	horiz.frame-upper	1	L-7	90-90
FT-1302F	okomiti pojas rama	mullion frame	2	H-72	90-90
FT-1303F	vodoravni profil krila	transom of sash	6	Lkr=L/3-54	45-45
FT-1303F	okomiti profil krila	mullion of sash	6	Hkr=H-128	45-45
F-1562	dodatni profil na krilu	auxiliary profile on sash	1	H-128	90-90
F-1562	dodatni profil na ramu	auxiliary profile on frame	1	H-108	90-90
F-1561	maska rama	mask frame	1	H-108	90-90
F-1561	maska krila	mask sash	1	H-128	90-90
Z40-666	vodoravne lajsne (20.5 mm)	horizontal bead (20.5 mm)	6	Lkr-84	90-90
Z40-666	okomite lajsne (20.5 mm)	vertical bead (20.5 mm)	6	Hkr-128	90-90
F-1584	klizač	slider	2	Hkr	90-90

Vezni elementi Conn. elements	**opis** description		**kom** pcs
710.413	kutna spojnica krila	sash corner bracket	24
731.010	pomoćni kutnik krila	auxiliary sash corner bracket	12
383.001	maska profila FT-1301F	mask profile FT-1301F	1
360.009	odvodnja kapljevina -Monodrain	drainrage -Monodrain	6
373.003	maska za drenažni otvor	drainage hole mask	2
363.069	umetak za F-1561	insert for F-1561	1
111.024	baglame	hinges	6
111.025	baglama-rukohvat	hinge-handrail	1
111.022	mehanizam gornje vodilice	upper guide mechanism	1
111.023	mehanizam donje pratilice	lower guide mechanism	1
140.088	brava	lock	2
105.007	ručka za bravu	handle for lock	1
383.002	zapinjač u profilu FT-1303F	rod end in profile FT-1303F	4
100.017	ručka za bravu (Roto)	handle for lock (Roto)	1
140.081	graničnik krila	sash stopper	2

Brtve Gaskets	**opis** description		**mjera** measure
341.011	brtva u g. vodilici, prema krilu	gasket in up. guide, towards sash	L
321.001	brtva u profilu F-1561	gasket inprofile F-1561	2H
341.014	brtva na spoju, okomita	gasket on joint, vertical	14H
341.015	brtva na spoju, okomita(maska)	gasket on joint, vertical(mask)	2H
344.085	brtva u žlijebu donje vodilice	gasket in groove of lower guide	L
341.016	brtva krila prema gornjoj vodilici	sash seal towards upper guide	L
341.017	brtva krila prema d. vodilici,vani	sash seal towards l. guide, exterior	L
341.018	brtva krila prema d.vodilici,unutra	sash seal towards l. guide, interior	L
321.002	brtva za stakljenje, vanjska	gasket for glazing, exterior	2L+6H
311.003	brtva za stakljenje, unutarnja	gasket for glazing, interior	2L+6H

Staklo Glass	**opis** description		**kom** pcs	**mjera** measure
48 mm	IZO staklo	Insulation glass	3	Lkr-98 x Hkr-98

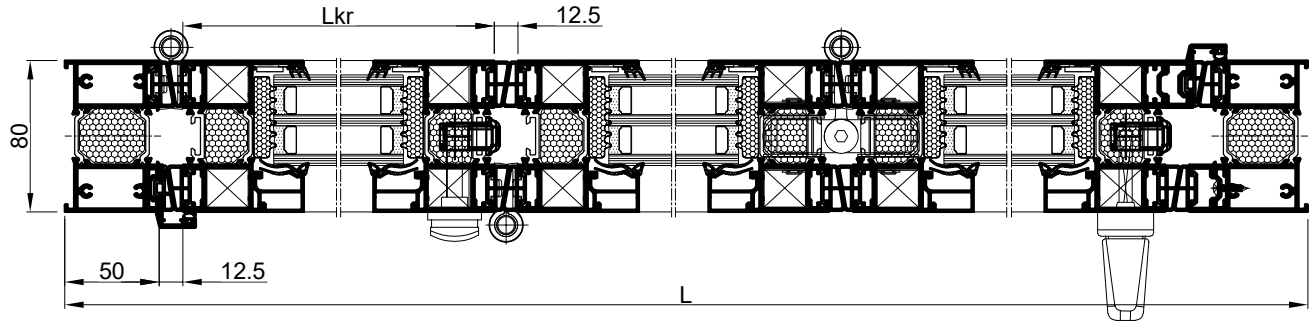

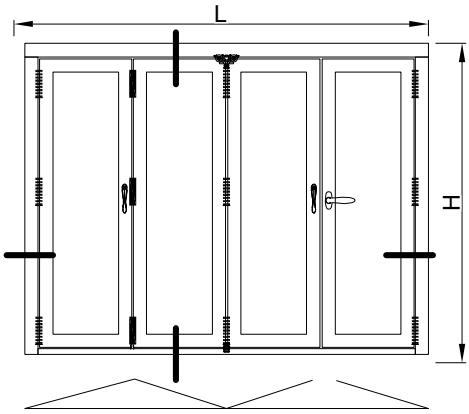

HARMO OTVARANJE 3+1
OTVARANJE VANI
HARMO OPENING 3+1
OUTSIDE OPENING

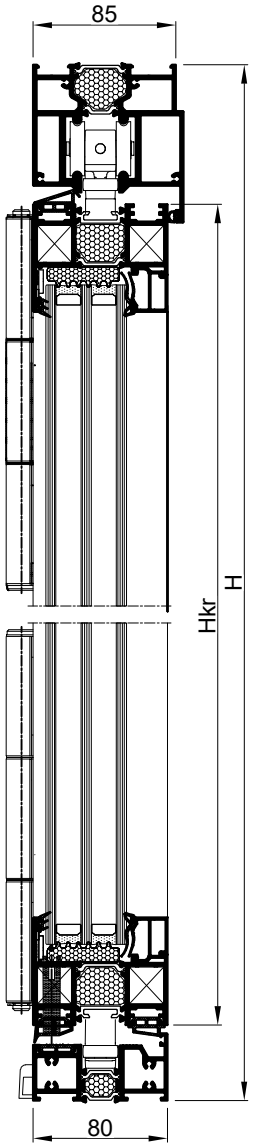

Profil Profile	**opis** description		**kom** pcs	**mjera** measure	**pilanje** cutting
FT-1300F	vodor.rama-dolje	horiz.frame-lower	1	L-90	90-90
FT-1301F	vodor.rama-gore	horiz.frame-upper	1	L-7	90-90
FT-1302F	okomiti pojas rama	mullion frame	2	H-72	90-90
FT-1303F	vodoravni profil krila	transom of sash	8	Lkr=L/4-44	45-45
FT-1303F	okomiti profil krila	mullion of sash	8	Hkr=H-128	45-45
F-1562	dodatni profil na krilu	auxiliary profile on sash	2	H-128	90-90
F-1561	maska rama	mask frame	2	H-108	90-90
F-1561	maska krila	mask sach	1	H-128	90-90
Z40-666	vodoravne lajsne (20.5 mm)	horizontal bead (20.5 mm)	8	Lkr-84	90-90
Z40-666	okomite lajsne (20.5 mm)	vertical bead (20.5 mm)	8	Hkr-128	90-90
F-1584	klizač	slider	3	Hkr	90-90

Vezni elementi Conn. elements	**opis** description		**kom** pcs
710.413	kutna spojnica krila	sash corner bracket	32
731.010	pomoćni kutnik krila	auxiliary sash corner bracket	16
383.001	maska profila FT-1301F	mask profile FT-1301F	1
360.009	odvodnja kapljevina -Monodrain	drainage -Monodrain	8
373.003	maska za drenažni otvor	drainage hole mask	2
363.069	umetak za F-1561	insert for F-1561	2
111.024	baglame	hinges	9
111.025	baglama-rukohvat	hinge-handrail	1
111.022	mehanizam gornje vodilice	upper guide mechanism	1
111.023	mehanizam donje pratilice	lower guide mechanism	1
140.088	brava	lock	3
105.007	ručka za bravu	handle for door	2
383.002	zapinjač u profilu FT-1303F	rod end in profile FT-1303F	6
100.017	ručka za bravu (Roto)	handle for lock (Roto)	1
140.081	graničnik krila	sash stopper	2

Brtve Gaskets	**opis** description		**mjera** measure
341.011	brtva u g. vodilici, prema krilu	gasket in up. guide, towards sash	L
321.001	brtva u profilu F-1561	gasket in profile F-1561	2H
341.014	brtva na spoju, okomita	gasket on joint, vertical	18H
341.015	brtva na spoju, okomita(maska)	gasket on joint, vertical(mask)	2H
344.085	brtva u žlijebu donje vodilice	seal in groove of lower guide	L
341.016	brtva krila prema gornjoj vodilici	sash seal towards upper guide	L
341.017	brtva krila prema d. vodilici,vani	sash seal towards l. guide, exterior	L
341.018	brtva krila prema d.vodilici,unutra	sash seal towards l. guide, interior	L
321.002	brtva za stakljenje, vanjska	gasket for glazing, exterior	2L+8H
311.003	brtva za stakljenje, unutarnja	gasket for glazing, interior	2L+8H

Staklo Glass	**opis** description			**mjera** measure
48 mm	IZO staklo	Insulation glass	4	Lkr-98 x Hkr-98

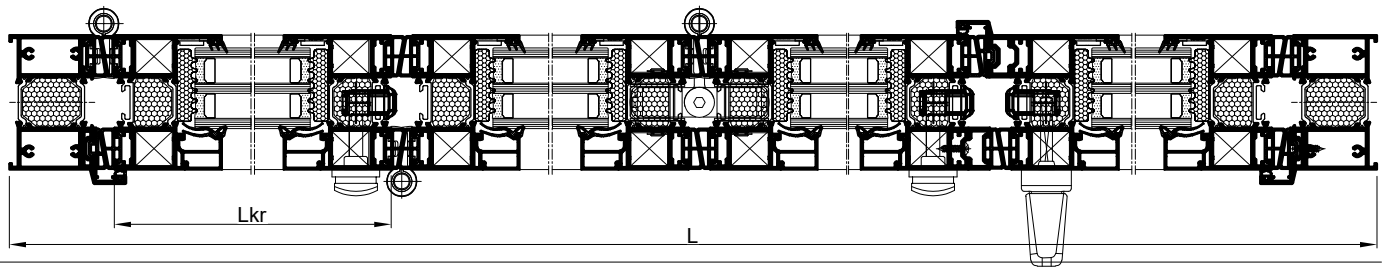

Rezne liste
Cutting lists

TERMO 80 HD

Profil Profile	opis description		kom pcs	mjera measure	pilanje cutting
FT-1300F	vodor.rama-dolje	horiz.frame-lower	1	L-90	90-90
FT-1301F	vodor.rama-gore	horiz.frame-upper	1	L-7	90-90
FT-1302F	okomiti pojas rama	mullion frame	2	H-72	90-90
FT-1303F	vodoravni profil krila	transom of sash	10	Lkr=L/5-37.5	45-45
FT-1303F	okomiti profil krila	mullion of sash	10	Hkr=H-128	45-45
F-1562	dodatni profil na krilu	auxiliary profile on sash	1	H-128	90-90
F-1562	dodatni profil na ramu	ass. profile on frame	1	H-108	90-90
F-1561	maska rama	mask frame	1	H-108	90-90
F-1561	maska krila	mask sash	1	H-128	90-90
Z40-666	vodoravne lajsne (20.5 mm)	horizontal bead (20.5 mm)	10	Lkr-84	90-90
Z40-666	okomite lajsne (20.5 mm)	vertical bead (20.5 mm)	10	Hkr-128	90-90
F-1584	klizač	slider	3	Hkr	90-90

Vezni elementi Conn.elements	opis description		kom pcs
710.413	kutna spojnica krila	sash corner bracket	40
731.010	pomoćni kutnik krila	auxiliary sash corner bracket	20
383.001	maska profila FT-1301F	mask profile FT-1301F	1
360.009	odvodnja kapljevina -Monodrain	drainage -Monodrain	10
373.003	maska za drenažni otvor	drainage hole mask	3
363.069	umetak za F-1561	insert for F-1561	1
111.024	baglame	hinges	9
111.025	baglama-rukohvat	hinge-handrail	2
111.022	mehanizam gornje vodilice	upper guide mechanism	2
111.023	mehanizam donje pratilice	lower guide mechanism	2
140.088	brava	lock	3
105.007	ručka za bravu	handle for lock	2
383.002	zapinjač u profilu FT-1303F	rod end in profile FT-1303F	6
100.017	ručka za bravu (Roto)	handle for lock (Roto)	1
140.081	graničnik krila	sash stopper	4

Brtve Gaskets	opis description		mjera measure
341.011	brtva u g. vodilici, prema krilu	gasket in up. guide, towards sash	L
321.001	brtva u profilu F-1561	gasket in profile F-1561	2H
341.014	brtva na spoju, okomita	gasket on joint, vertical	22H
341.015	brtva na spoju, okomita(maska)	gasket on joint, vertical(mask)	2H
344.085	brtva u žlijebu donje vodilice	seal in groove of lower guide	L
341.016	brtva krila prema gornjoj vodilici	sash seal towards upper guide	L
341.017	brtva krila prema d. vodilici,vani	sash seal towards l. guide, exterior	L
341.018	brtva krila prema d.vodilici,unutra	sash seal towards l. guide, interior	L
321.002	brtva za stakljenje, vanjska	gasket for glazing, exterior	2L+10H
311.003	brtva za stakljenje, unutarnja	gasket for glazing, interior	2L+10H

Staklo Glass	opis description		kom pcs	mjera measure
48 mm	IZO staklo	Insulation glass	5	Lkr-98 x Hkr-98

HARMO OTVARANJE 5+0
OTVARANJE VANI
HARMO OPENING 5+0
OUTSIDE OPENING

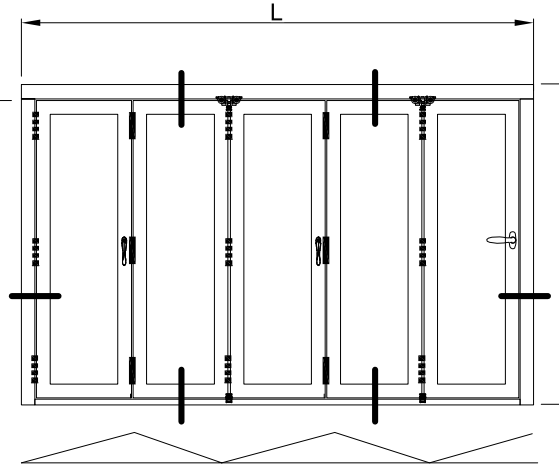

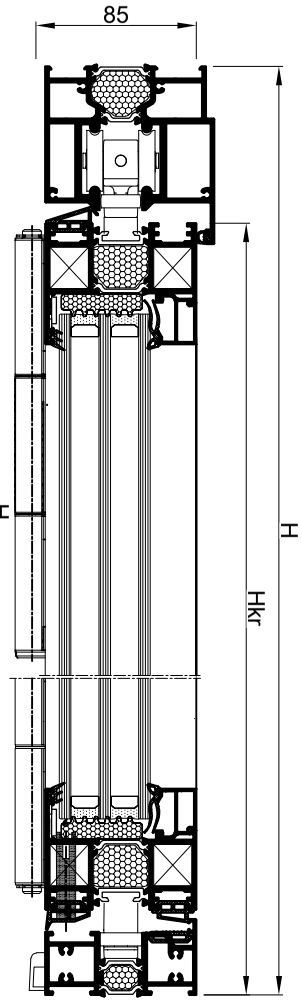

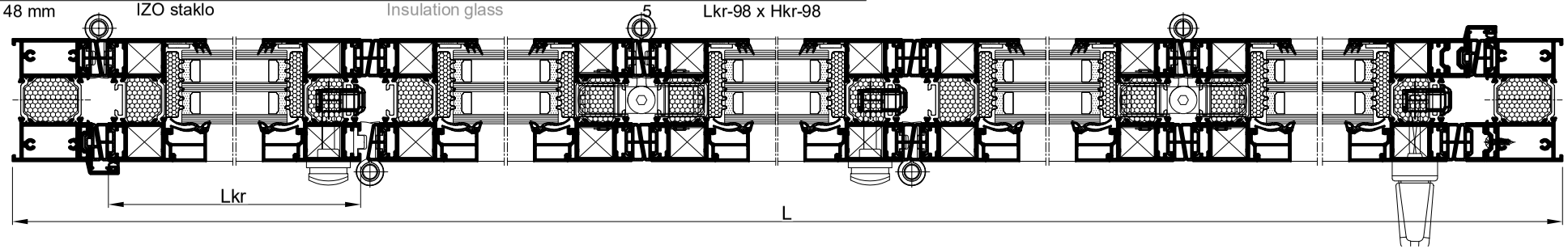

TERMO 80 HD

Rezne liste
Cutting lists

HARMO OTVARANJE 5+1
OTVARANJE VANI
HARMO OPENING 5+1
OUTSIDE OPENING

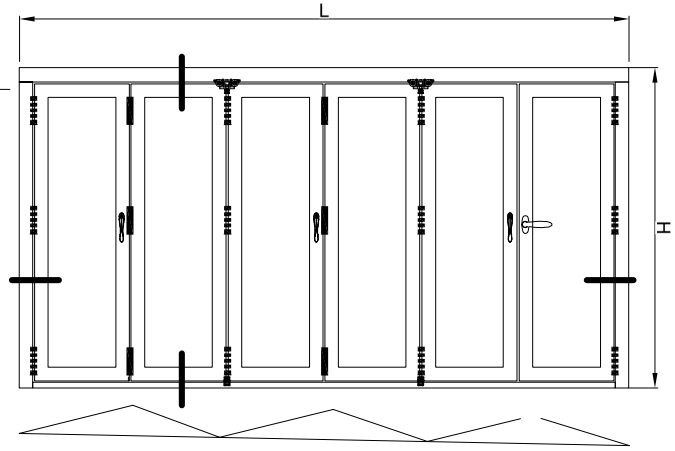

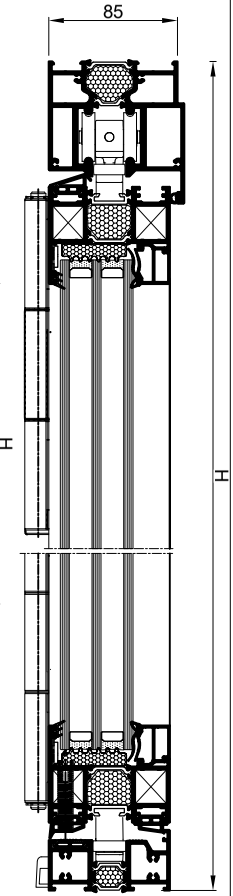

Profil Profile	**opis** description		**kom** pcs	**mjera** measure	**pilanje** cutting
FT-1300F	vodor.rama-dolje	horiz.frame-lower	1	L-90	90-90
FT-1301F	vodor.rama-gore	horiz.frame-upper	1	L-7	90-90
FT-1302F	okomiti pojas rama	mullion frame	2	H-72	90-90
FT-1303F	vodoravni profil krila	transom of sash	12	**Lkr=L/6-33.5**	45-45
FT-1303F	okomiti profil krila	mullion of sash	12	Hkr=H-128	45-45
F-1562	dodatni profil na krilu	ass. profile on sash	2	H-128	90-90
F-1561	maska rama	mask frame	2	H-108	90-90
F-1561	maska krila	mask sach	1	H-128	90-90
Z40-666	vodoravne lajsne (20.5 mm)	horizontal bead (20.5 mm)	12	Lkr-84	90-90
Z40-666	okomite lajsne (20.5 mm)	vertical bead (20.5 mm)	12	Hkr-128	90-90
F-1584	klizač	slider	4	Hkr	90-90

Vezni elementi Conn. elements	**opis** description		**kom** pcs
710.413	kutna spojnica krila	sash corner bracket	48
731.010	pomoćni kutnik krila	auxiliary sash corner bracket	24
383.001	maska profila FT-1301F	mask profile FT-1301F	1
360.009	odvodnja kapljevina -Monodrain	drainage -Monodrain	12
373.003	maska za drenažni otvor	drainage hole mask	3
363.069	umetak za F-1561	insert for F-1561	2
111.024	baglame	hinges	12
111.025	baglama-rukohvat	hinge-handrail	2
111.022	mehanizam gornje vodilice	upper guide mechanism	2
111.023	mehanizam donje pratilice	lower guide mechanism	2
140.088	brava	lock	4
105.007	ručka za bravu	handle for lock	3
383.002	zapinjač u profilu FT-1303F	rod end in profile FT-1303F	8
100.017	ručka za bravu (Roto)	handle for lock (Roto)	1
140.081	graničnik krila	sash stopper	4

Brtve Gaskets	**opis** description		**mjera** measure
341.011	brtva u g. vodilici, prema krilu	gasket in up, guide, towards sash	L
321.001	brtva u profilu F-1561	gasket in profile F-1561	2H
341.014	brtva na spoju, okomita	gasket on joint, vertical	26H
341.015	brtva na spoju, okomita(maska)	gasket on joint,vertical(mask)	2H
344.085	brtva u žlijebu donje vodilice	seal ini groove of lower guide	L
341.016	brtva krila prema gornjoj vodilici	sash seal towards upper guide	L
341.017	brtva krila prema d. vodilici,vani	sash seal towards l. guide, exterior	L
341.018	brtva krila prema d.vodilici,unutra	sash seal towards l. guide, interior	L
321.002	brtva za stakljenje, vanjska	gasket for glazing, exterior	2L+12H
311.003	brtva za stakljenje, unutarnja	gasket for glazing, interior	2L+12H

Staklo Glass	**opis** description			**mjera** measure
48 mm	IZO staklo	Insulation glass	6	Lkr-98 x Hkr-98

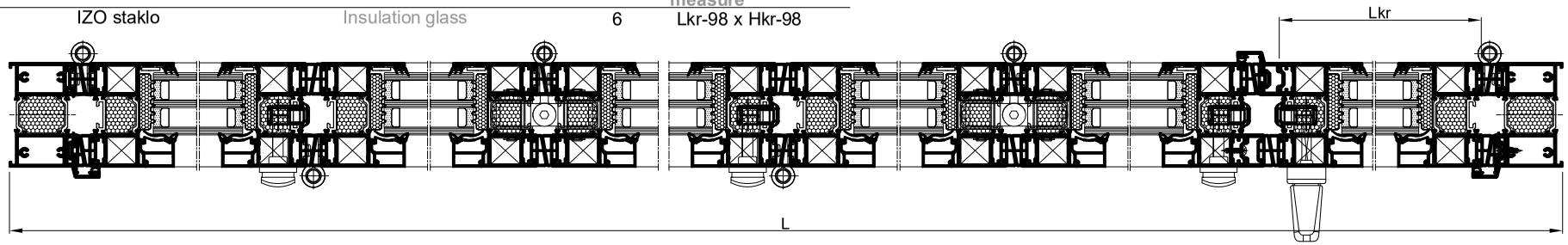

09.2018

304.12.053

Rezne liste
Cutting lists

TERMO 80 HD

HARMO OTVARANJE 3+3
OTVARANJE VANI
HARMO OPENING 3+3
OUTSIDE OPENING

Profil Profile	opis description		kom pcs	mjera measure	pilanje cutting
FT-1300F	vodor.rama-dolje	horiz.frame-lower	1	L-90	90-90
FT-1301F	vodor.rama-gore	horiz.frame-upper	1	L-7	90-90
FT-1302F	okomiti pojas rama	mullion frame	2	H-72	90-90
FT-1303F	vodoravni profil krila	transom of sash	12	**Lkr=L/6-33.5**	45-45
FT-1303F	okomiti profil krila	mullion of sash	12	Hkr=H-128	45-45
F-1562	dodatni profil na krilu	ass. profile on sash	2	H-128	90-90
F-1561	maska rama	mask frame	2	H-108	90-90
F-1561	maska krila	mask sach	1	H-128	90-90
Z40-666	vodoravne lajsne (20.5 mm)	horizontal bead (20.5 mm)	12	Lkr-84	90-90
Z40-666	okomite lajsne (20.5 mm)	vertical bead (20.5 mm)	12	Hkr-128	90-90
F-1584	klizač	slider	4	Hkr	90-90

Vezni elementi Conn. elements	opis description		kom pcs
710.413	kutna spojnica krila	sash corner bracket	48
731.010	pomoćni kutnik krila	auxiliary sash corner bracket	24
383.001	maska profila FT-1301F	mask profile FT-1301F	1
360.009	odvodnja kapljevina -Monodrain	drainage -Monodrain	12
373.003	maska za drenažni otvor	drainage hole mask	3
363.069	umetak za F-1561	insert for F-1561	2
111.024	baglame	hinges	12
111.025	baglama-rukohvat	hinge-handrail	2
111.022	mehanizam gornje vodilice	upper guide mechanism	2
111.023	mehanizam donje pratilice	lower guide mechanism	2
140.088	brava	lock	4
105.007	ručka za bravu	handle for lock	3
383.002	zapinjač u profilu FT-1303F	rod end in profile FT-1303F	8
100.017	ručka za bravu (Roto)	handle for lock (Roto)	1
140.081	graničnik krila	sash stopper	4

Brtve Gaskets	opis description		mjera measure
341.011	brtva u g. vodilici, prema krilu	gasket in up. guide, towards sash	L
321.001	brtva u profilu F-1561	gasket in profile F-1561	2H
341.014	brtva na spoju, okomita	gasket on joint, vertical	26H
341.015	brtva na spoju, okomita(maska)	gasket on joint, vertical(mask)	2H
344.085	brtva u žlijebu donje vodilice	seal in groove of lower guide	L
341.016	brtva krila prema gornjoj vodilici	ssh seal towards upper guide	L
341.017	brtva krila prema d. vodilici,vani	sash seal towards l. guide, exterior	L
341.018	brtva krila prema d.vodilici,unutra	sash seal towards l. guide, interior	L
321.002	brtva za stakljenje, vanjska	gasket for glazing, exterior	2L+12H
311.003	brtva za stakljenje, unutarnja	gasket for glazing, interior	2L+12H

Staklo Glass	opis description			mjera measure
48 mm	IZO staklo	Insulation glass	6	Lkr-98 x Hkr-98

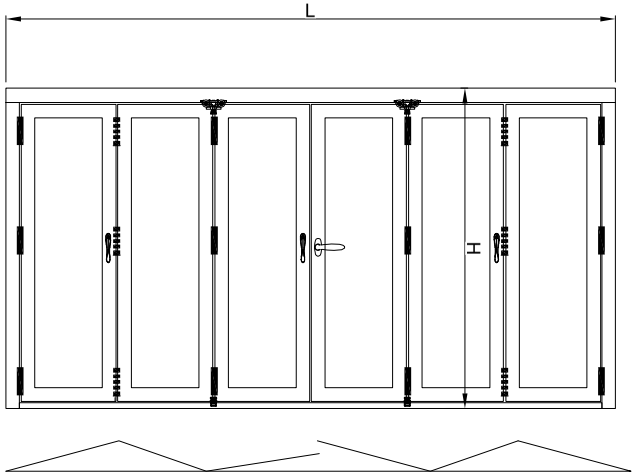

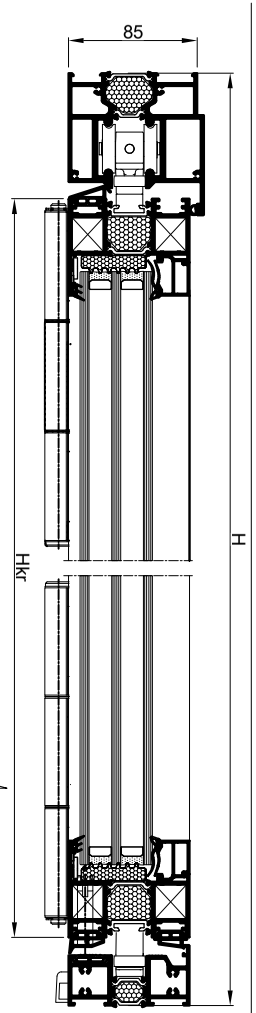

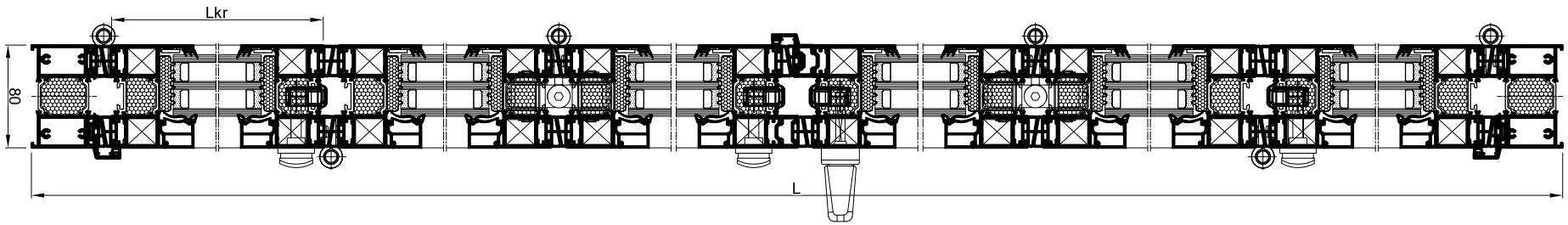

Rezne liste
Cutting lists

TERMO 80 HD

HARMO OTVARANJE 5+3
OTVARANJE VANI
HARMO OPENING 5+3
OUTSIDE OPENING

Profil Profile	opis description		kom pcs	mjera measure	pilanje cutting
FT-1300F	vodor.rama-dolje	horiz.frame-lower	1	L-90	90-90
FT-1301F	vodor.rama-gore	horiz.frame-upper	1	L-7	90-90
FT-1302F	okomiti pojas rama	mullion frame	2	H-72	90-90
FT-1303F	vodoravni profil krila	transom of sash	16	Lkr=L/8-28	45-45
FT-1303F	okomiti profil krila	mullion of sash	16	Hkr=H-128	45-45
F-1562	dodatni profil na krilu	ass. profile on sash	2	H-128	90-90
F-1561	maska rama	mask frame	2	H-108	90-90
F-1561	maska krila	mask sach	1	H-128	90-90
Z40-666	vodoravne lajsne (20.5 mm)	horizontal bead (20.5 mm)	16	Lkr-84	90-90
Z40-666	okomite lajsne (20.5 mm)	vertical bead (20.5 mm)	16	Hkr-128	90-90
F-1584	klizač	slider	5	Hkr	90-90

Vezni elementi Conn. elements	opis description		kom pcs
710.413	kutna spojnica krila	sash corner bracket	64
731.010	pomoćni kutnik krila	auxiliary sash corner bracket	32
383.001	maska profila FT-1301F	mask profile FT-1301F	1
360.009	odvodnja kapljevina -Monodrain	drainage -Monodrain	16
373.003	maska za drenažni otvor	drainage hole mask	4
363.069	umetak za F-1561	insert for F-1561	2
111.024	baglame	hinges	15
111.025	baglama-rukohvat	hinge-handrail	3
111.022	mehanizam gornje vodilice	upper guide mechanism	3
111.023	mehanizam donje pratilice	lower guide mechanism	3
140.088	brava	lock	5
105.007	ručka za bravu	handle for lock	4
383.002	zapinjač u profilu FT-1303F	rod end in profile FT-1303F	10
100.017	ručka za bravu (Roto)	handle for lock (Roto)	1
140.081	graničnik krila	sash stopper	6

Brtve Gaskets	opis description		mjera measure
341.011	brtva u g. vodilici, prema krilu	gasket in up. guide, towardssash	L
321.001	brtva u profilu F-1561	gasket in profile F-1561	2H
341.014	brtva na spoju, okomita	gasket on joint, vertical	34H
341.015	brtva na spoju, okomita(maska)	gasket on joint, vertical(mask)	2H
344.085	brtva u žlijebu donje vodilice	seal in groove of lower guide	L
341.016	brtva krila prema gornjoj vodilici	sash seal towards upper guide	L
341.017	brtva krila prema d. vodilici,vani	sash seal towards l. guide, exterior	L
341.018	brtva krila prema d.vodilici,unutra	sash seal towards l. guide, interior	L
321.002	brtva za stakljenje, vanjska	gasket for glazing, exterior	2L+16H
311.003	brtva za stakljenje, unutarnja	gasket for glazing, interior	2L+16H

Staklo Glass	opis description			mjera measure
48 mm	IZO staklo	Insulation glass	8	Lkr-98 x Hkr-98

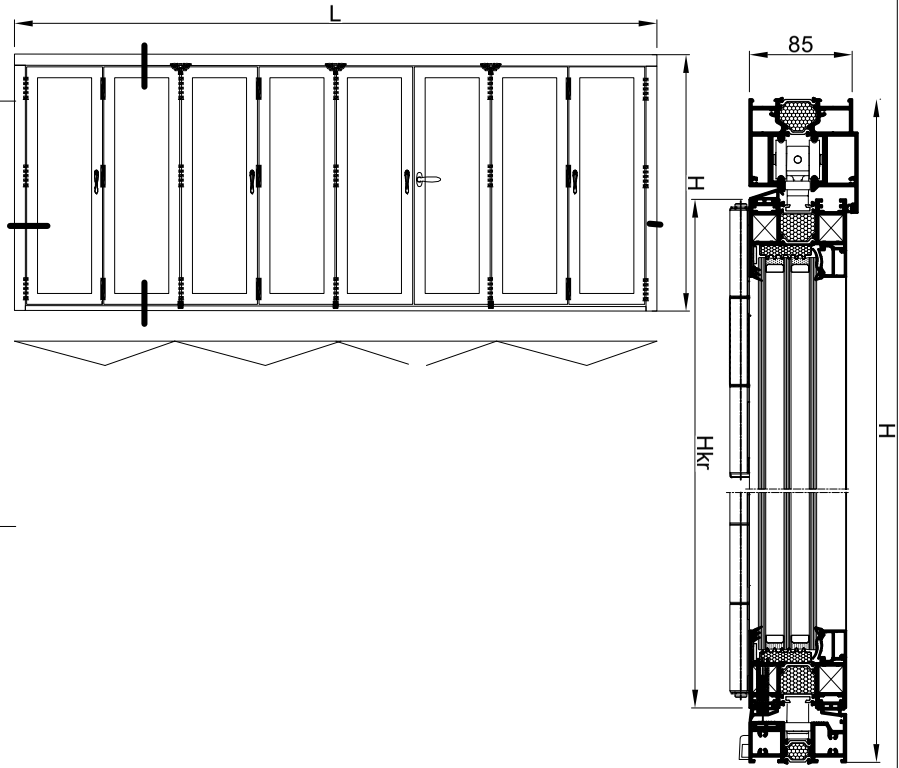

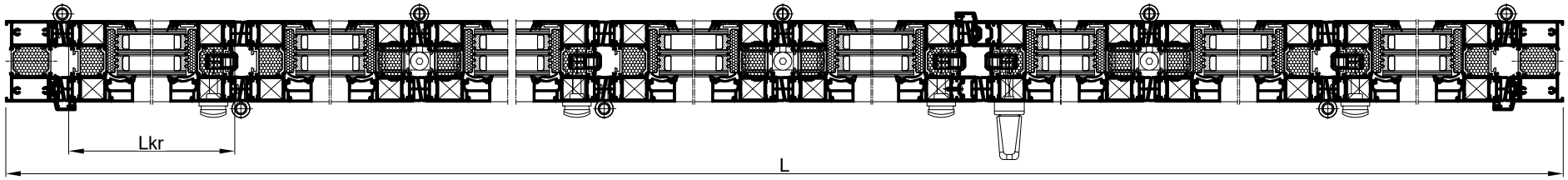

TERMO 80 HD

Rezne liste
Cutting lists

Profil Profile	opis description		kom pcs	mjera measure	pilanje cutting
FT-1300F	vodor.rama-dolje	horiz.frame-lower	1	L-90	90-90
FT-1301F	vodor.rama-gore	horiz.frame-upper	1	L-7	90-90
FT-1302F	okomiti pojas rama	mullion frame	2	H-72	90-90
FT-1303F	vodoravni profil krila	transom of sash	20	Lkr=L/10-25	45-45
FT-1303F	okomiti profil krila	mullion of sash	20	Hkr=H-128	45-45
F-1562	dodatni profil na krilu	ass. profile on sash	2	H-128	90-90
F-1561	maska rama	mask frame	2	H-108	90-90
F-1561	maska krila	mask sach	1	H-128	90-90
Z40-666	vodoravne lajsne (20.5 mm)	horizontal bead (20.5 mm)	20	Lkr-84	90-90
Z40-666	okomite lajsne (20.5 mm)	vertical bead (20.5 mm)	20	Hkr-128	90-90
F-1584	klizač	slider	6	Hkr	90-90

Vezni elementi Conn. elements	opis description		kom pcs
710.413	kutna spojnica krila	sash corner bracket	80
731.010	pomoćni kutnik krila	auxiliary sash corner bracket	40
383.001	maska profila FT-1301F	mask profile FT-1301F	1
360.009	odvodnja kapljevina -Monodrain	drainage -Monodrain	20
373.003	maska za drenažni otvor	drainage hole mask	5
363.069	umetak za F-1561	insert for F-1561	2
111.024	baglame	hinges	18
111.025	baglama-rukohvat	hinge-handrail	4
111.022	mehanizam gornje vodilice	upper guide mechanism	4
111.023	mehanizam donje pratilice	lower guide mechanism	4
140.088	brava	lock	6
105.007	ručka za bravu	handle for lock	5
383.002	zapinjač u profilu FT-1303F	rod end in profile FT-1303F	12
100.017	ručka za bravu (Roto)	handle for lock (Roto)	1
140.081	graničnik krila	sash stopper	8

Brtve Gaskets	opis description		mjera measure
341.011	brtva u g. vodilici, prema krilu	gasket in up. guide, towards sash	L
321.001	brtva u profilu F-1561	gasket in profile F-1561	2H
341.014	brtva na spoju, okomita	gasket on joint, vertical	42H
341.015	brtva na spoju, okomita(maska)	gasket on joint, vertical(mask)	2H
344.085	brtva u žlijebu donje vodilice	seal in groove of lower guide	L
341.016	brtva krila prema gornjoj vodilici	sash seal towards upper guide	L
341.017	brtva krila prema d. vodilici,vani	sash seal towards, l. guide, exterior	L
341.018	brtva krila prema d.vodilici,unutra	sash seal towards l. guide, interior	L
321.002	brtva za stakljenje, vanjska	gasket for glazing, exterior	2L+20H
311.003	brtva za stakljenje, unutarnja	gasket for glazing, interior	2L+20H

Staklo Glass	opis description			mjera measure
48 mm	IZO staklo	Insulation glass	10	Lkr-98 x Hkr-98

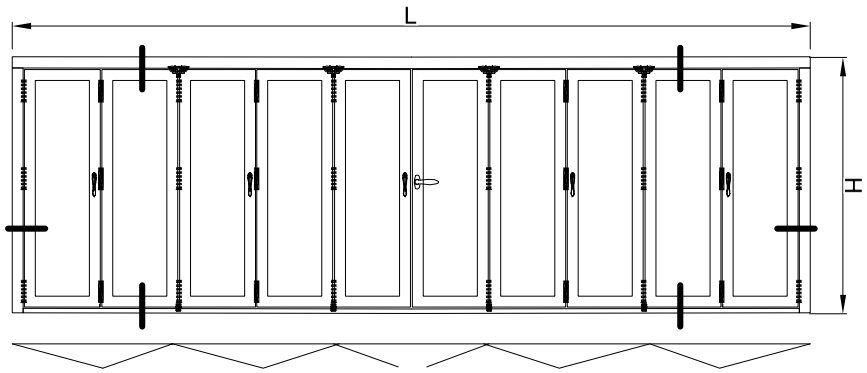

HARMO OTVARANJE 5+5
OTVARANJE VANI
HARMO OPENING 5+5
OUTSIDE OPENING

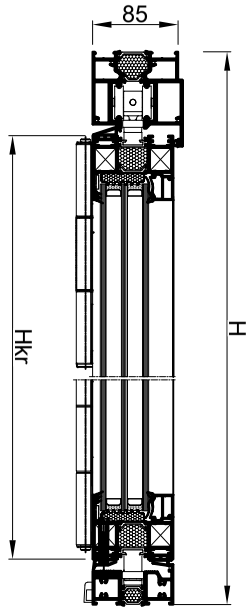

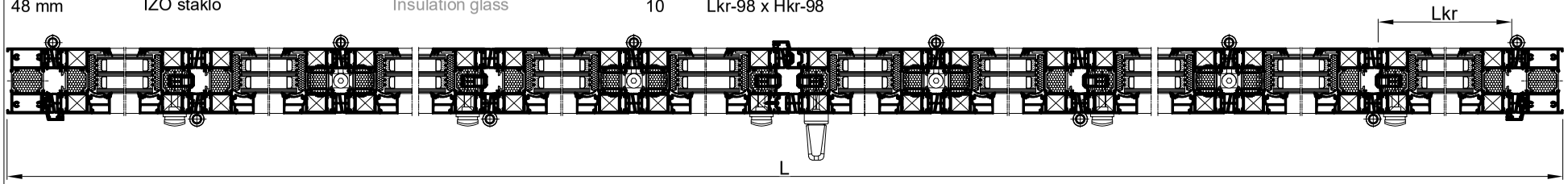

09.2018

304.12.056

FEAL

Skenirajte QR kod i registrirajte se na partner.feal.ba

Scan the QR code and register on partner.feal.ba

TERMO **80 HD**

Kolovoz/August 2019

FEAL d.o.o.
Trnska cesta 146
88220 Široki Brijeg
Bosna i Hercegovina
Tel. +387 39 704-269; 705-807; 705-636
Fax. +387 39 704-358
info@feal.ba
www.feal.ba