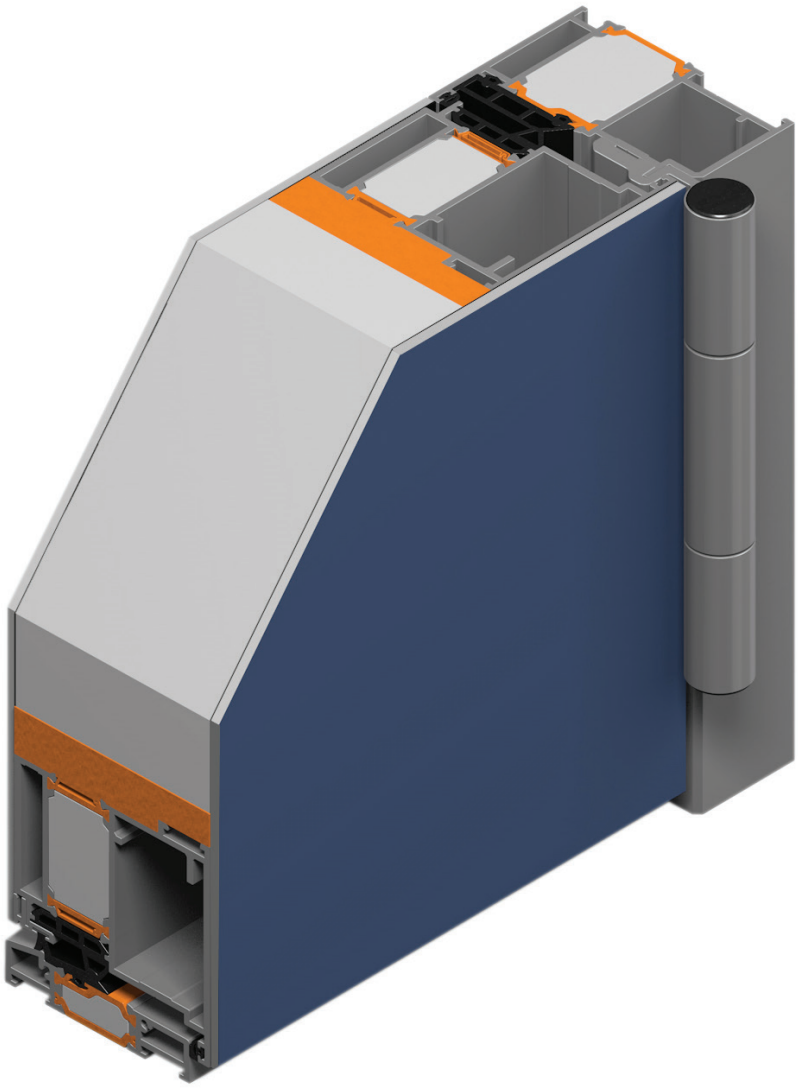
FEAL



TERMO **85 VS** I **VP**

ULAZNA VRATA

ENTRY DOOR

Knjiga B / *Book B*

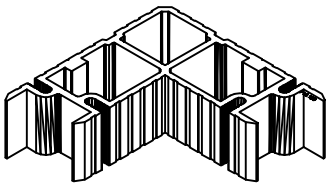
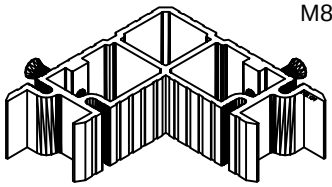
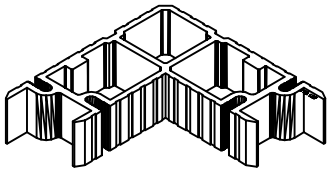
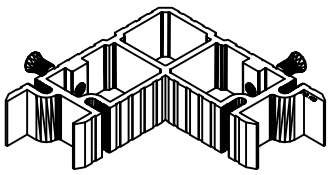
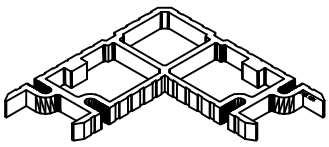
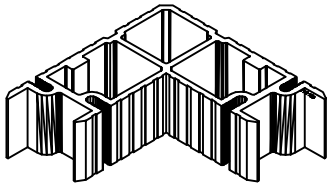
SADRŽAJ - CONTENT

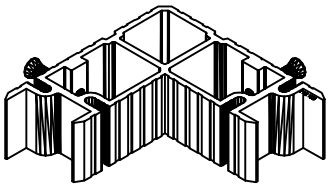
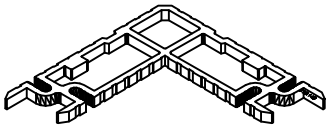
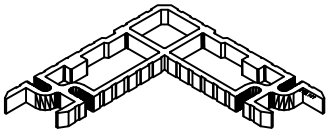
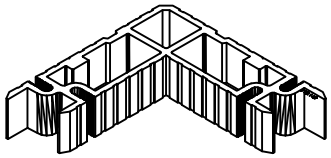
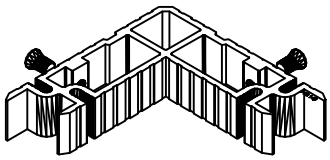
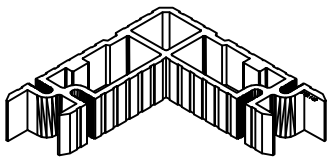
06	VEZNI ELEMENTI	303.06.000-007
06	CONNECTION ELEMENTS	303.06.000-007
07	PVC ELEMENTI	303.07.000-003
07	PVC ELEMENTS	303.07.000-003
08	MEHANIZMI	303.08.000-015
08	MECHANISMS	303.08.000-015
09	BRTVILA	303.09.000-005
09	GASKETS	303.09.000-005
10	DODACI	303.10.000-007
10	ACCESSORIES	303.10.000-007
11	OBRADA I MONTAŽA - KUTNE SPOJNICE	303.11.000-041
11	PROCESSING AND MONTAGE - CORNER BRACKETS	303.11.000-041
11	OBRADA I MONTAŽA - ČEPOVI	303.11.050-059
11	PROCESSING AND MONTAGE - PVC CAPS	303.11.050-059
11	OBRADA I MONTAŽA - PREČKE I UMETCI	303.11.070-093
11	PROCESSING AND MONTAGE - TRANSOM AND ADD PROFILE	303.11.070-093
11	OBRADA I MONTAŽA - BRAVE	303.11.100-105
11	PROCESSING AND MONTAGE - MULTIPOINT LOCKS	303.11.100-105
11	OBRADA I MONTAŽA - ŠARKE	303.11.120-139
11	PROCESSING AND MONTAGE - BARREL DOOR HINGE	303.11.120-139
11	OBRADA I MONTAŽA - ODVOD KAPLJEVINA	303.11.140-147
11	PROCESSING AND MONTAGE - WATER DRAINAGE	303.11.140-147
11	OBRADA I MONTAŽA - RUKOHVATI	303.11.160-165
11	PROCESSING AND MONTAGE - DOOR PULL HANDLE	303.11.160-165

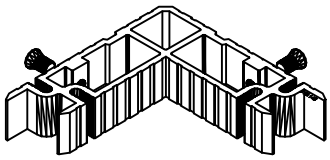
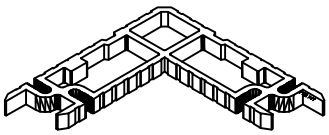
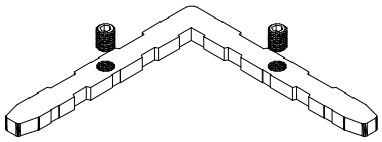
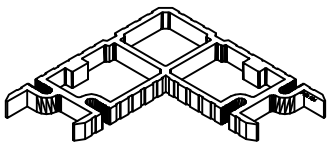
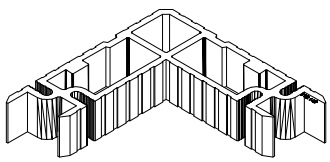
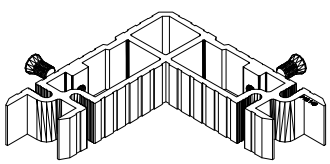
SADRŽAJ - CONTENT

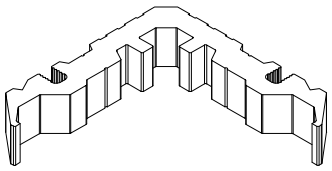
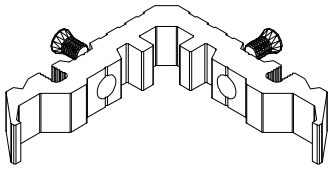
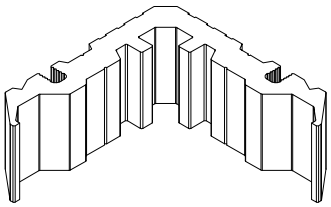
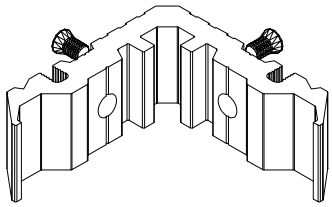
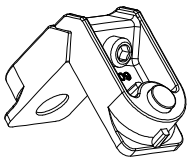
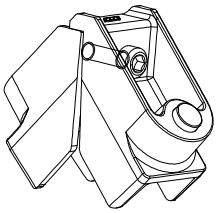
11	OBRADA I MONTAŽA - PANEL ZA VRATA	303.11.180-189
11	PROCESSING AND MONTAGE - DOOR PANEL	303.11.180-189
11	OBRADA I MONTAŽA - AUTOMATSKO OTVARANJE	303.11.200-209
11	PROCESSING AND MONTAGE - DOOR PANEL	303.11.200-209
12	REZNE LISTE	303.12.000-093
12	CUTTING LISTS	303.12.000-093

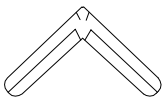
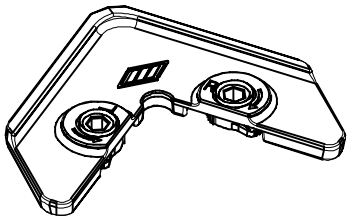
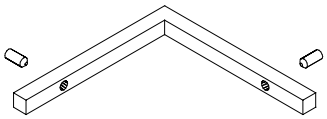
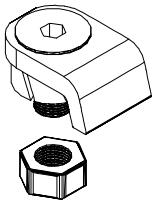
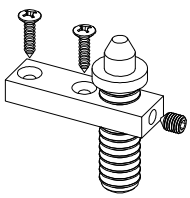
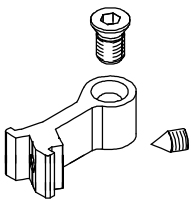
Vezni elementi
Connection elements

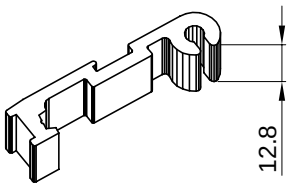
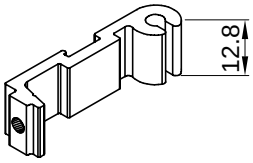
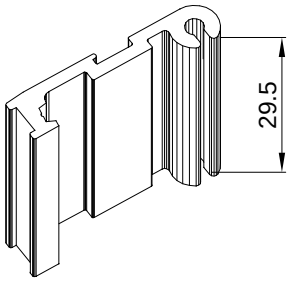
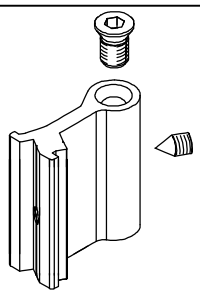
Oznaka Code	Izgled-presjek View- cross section	Opis Description	Materijal Material	Napomena Remark
710.130	L=36,4 mm 	- Kutna spojnica za komoru 36,9x46,6 - Za profile: FT-0552 F, FT-0553 F, FT-0554 F - Corner bracket for chamber 36,9x46,6 - For profiles: FT-0552 F, FT-0553 F, FT-0554 F	Al.	
710.131	L=36,4 mm M8x13 	- Kutna spojnica za komoru 36,9x46,6 - Za profile: FT-0552 F, FT-0553 F, FT-0554 F - Corner bracket for chamber 36,9x46,6 - For profiles: FT-0552 F, FT-0553 F, FT-0554 F	Al.	
710.132	L=28,1 mm 	- Kutna spojnica za komoru 28,6x46,6 - Za profile: FT-0562 F, FT-0564 F - Corner bracket for chamber 28,6x46,6 - For profiles: FT-0562 F, FT-0564 F	Al.	
710.133	L=28,1 mm 	- Kutna spojnica za komoru 28,6x46,6 - Za profile: FT-0562 F, FT-0564 F - Corner bracket for chamber 28,6x46,6 - For profiles: FT-0562 F, FT-0564 F	Al.	
710.134	L=10,3 mm 	- Kutna spojnica za komoru 10,6x46,6 - Za profile: FT-0562 F, FT-0564 F - Corner bracket for chamber 10,6x46,6 - For profiles: FT-0562 F, FT-0564 F	Al.	
710.135	L=37,4 mm 	- Kutna spojnica za komoru 37,9x46,6 - Za profile: FT-0561 F, FT-0563 F, FT-0591 F, FT-0592 F, FT-0593 F - Corner bracket for chamber 37,9x46,6 - For profiles: FT-0561 F, FT-0563 F, FT-0591 F, FT-0592 F, FT-0593 F	Al.	

Oznaka Code	Izgled-presjek View- cross section	Opis Description	Materijal Material	Napomena Remark
710.136	L=37,4 mm 	- Kutna spojnica za komoru 37,9x46,6 - Za profile: FT-0561 F, FT-0563 F, FT-0591 F, FT-0592 F, FT-0593 F - Corner bracket for chamber 37,9x46,6 - For profiles: FT-0561 F, FT-0563 F, FT-0591 F, FT-0592 F, FT-0593 F	Al.	
710.140	L=6,3 mm 	- Kutna spojnica za komoru 6,6x35,2 - Za profile: FT-0552 F, FT-0553 F, FT-0554 F - Corner bracket for chamber 6,6x35,2 - For profiles: FT-0552 F, FT-0553 F, FT-0554 F	Al.	
710.141	L=9,3 mm 	- Kutna spojnica za komoru 9,6x35,2 - Za profile: FT-0551 F, FT-0556 F, FT-0561 F - Corner bracket for chamber 9,6x35,2 - For profiles: FT-0551 F, FT-0556 F, FT-0561 F	Al.	
710.142	L=25,1 mm 	- Kutna spojnica za komoru 25,6x35,2 - Za profile: FT-0551 F, FT-0556 F - Corner bracket for chamber 25,6x35,2 - For profiles: FT-0551 F, FT-0556 F	Al.	
710.143	L=25,1 mm 	- Kutna spojnica za komoru 25,6x35,2 - Za profile: FT-0551 F, FT-0556 F - Corner bracket for chamber 25,6x35,2 - For profiles: FT-0551 F, FT-0556 F	**Al.**	
710.144	L=30.9 mm 	- Kutna spojnica za komoru 31.4x35,2 - Za profile: FT-0513 F - Corner bracket for chamber 31.4x35,2 - For profiles: FT-0513 F	Al.	

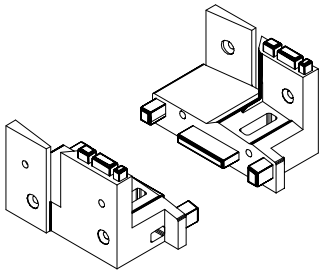
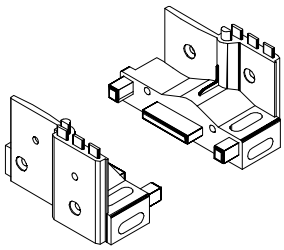
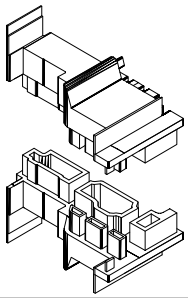
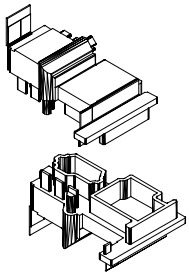
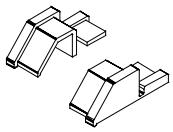
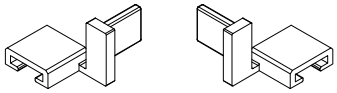
Oznaka Code	Izgled-presjek View- cross section	Opis Description	Materijal Material	Napomena Remark
710.145	L=30.9 mm 	- Kutna spojnica za komoru 31.4x35,2 - Za profile: FT-0513 F - Corner bracket for chamber 31.4x35,2 - For profiles: FT-0513 F	Al.	
710.091	L=11.8 mm 	- Kutna spojnica za komoru 12.35x35,2 - Za profile: FT-0513 F - Corner bracket for chamber 12.35x35,2 - For profiles: FT-0513 F	Al.	
710.015	l=3.8mm 	- Kutna spojnica za komoru 4.3x8.3 - Stara oznaka: K-061059/D - Za profile: F-1093, F-1205 - Corner bracket for chamber 4.3x8.3 - Former code: K-061059/D - For profiles: F-1093, F-1205	AL	
710.169	L=9.2 mm 	- Kutna spojnica za komoru 9.6x46,6 - Za profile: FT-0563 F, FT-0593 F - Corner bracket for chamber 9.6x46,6 - For profiles: FT-0563 F, FT-0593 F	Al.	
710.172	L=14,7 mm 	- Kutna spojnica za komoru 15,2x35,2 - Za profile: FT-0555 F, FT-0557 F - Corner bracket for chamber 15,2x35,2 - For profiles: FT-0555 F, FT-0557 F	Al.	
710.173	L=14,7 mm 	- Kutna spojnica za komoru 15,2x35,2 - Za profile: FT-0555 F, FT-0557 F - Corner bracket for chamber 15,2x35,2 - For profiles: FT-0555 F, FT-0557 F	Al.	

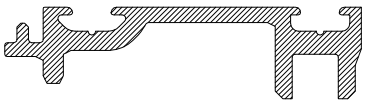
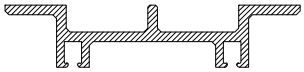
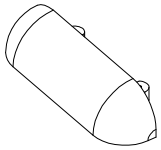
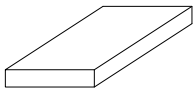
Oznaka Code	Izgled-presjek View- cross section	Opis Description	Materijal Material	Napomena Remark
710.484	l=14,5 mm 	- Kutna spojnica za komoru 14.9x15,2 - Za profile: FT-0565 F - Corner bracket for chamber 14.9x15,2 - For profiles: FT-0565 F	Al.	
710.485	l=14,5 mm 	- Kutna spojnica za komoru 14.9x15,2 - Za profile: FT-0565 F - Corner bracket for chamber 14.9x15,2 - For profiles: FT-0565 F	Al.	
710.450	l=28,5 mm 	- Kutna spojnica za komoru 29 x15,2 - Za profile: FT-0565 F - Corner bracket for chamber 29 x15,2 - For profiles: FT-0565 F	Al.	
710.458	l=28,5 mm 	- Kutna spojnica za komoru 29 x15,2 - Za profile: FT-0565 F - Corner bracket for chamber 29 x15,2 - For profiles: FT-0565 F		
730.008		- Kutna spojnica prozora-za komoru 29x15.2 - Stara oznaka: 0409 ,1001 - Za profile: FT-0565 F - Corner bracket for chamber 29x15.2 - Former code: 0409 ,1001 - For profiles: FT-0565 F	Zamak #3	
730.009		- Kutna spojnica prozora -za komoru 29x35.5 - Stara oznaka: 4004 ,2001 - Za profile: FT-0555 F - Corner bracket for chamber 29x35.5 - Former code: 4004 ,2001 - For profiles: FT-0555 F	Zamak #3	

Oznaka Code	Izgled-presjek View- cross section	Opis Description	Materijal Material	Napomena Remark
730.001		- Kutna spojnica za komoru 1.7x4.7 - Stara oznaka G-112 - Corner bracket for chamber 1.7x4.7 - Former code G-112	Inox	
731.010		- Kutna spojnica za usku komoru - Stara oznaka 2019/500 - Za profile: FT-0561 F, FT-0562 F, FT-0563 F FT-0564 F - Kutna spojnica za usku komoru - Former code 2019/500 - For profiles: FT-0561 F, FT-0562 F, FT-0563 F FT-0564 F	Zamak #3	
710.203		- Kutna spojnica za komoru 5.3x5.4 - Za profile: FT-0591 F, FT-0592 F - Corner bracket for chamber 5.3x5.4 - For profiles: FT-0591, FT-0592 F	Al.	
141.001		- Kopča s vijkom, maticom M5x10(12) i rascjepkom - Stara oznaka: VP-011 - Panel clamp, nut M5x10(12) i rascjepkom - Former code: VP-011	Inox	
141.002		- Protuprovalni umetak za vrata - Stara oznaka: OV-001 - Security pin for door - Former code: OV-001	Al	
710.066		- Veznik (L=14.7mm) - Stara oznaka E-200 - T-bracket (L=14.7mm) - Former code E-200	Al.	

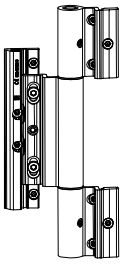
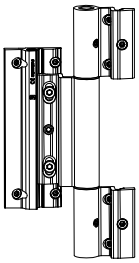
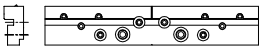
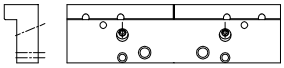
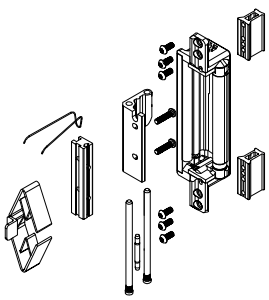
Oznaka Code	Izgled-presjek View- cross section	Opis Description	Materijal Material	Napomena Remark
710.079		- Dodatni veznik za prečku prema ramu - Additional T-bracket	Al.	
710.171		- Dodatni veznik za prečku prema krilu FT-0561 (otvaranje unutra) i krilu FT-0562 (otvaranje vani) - Additional T-bracket for transom to the sash FT-0561 (inward opening) and sash FT-0562 (outward opening)	Al.	
710.082		- Dodatni veznik za prečku FT-0580 F - T-bracket for transom FT-0580 F	Al.	
710.083		- Veznik (L=31 mm) - T-bracket (L=14.7mm)	Al.	

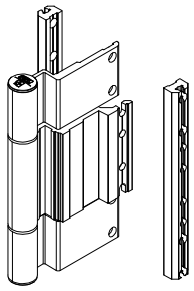
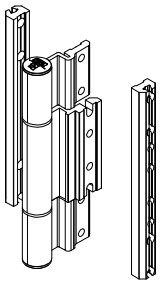
PVC elementi
PVC elements

Oznaka Code	Izgled-presjek View - cross section	Opis Description	Materijal Material	Napomena Remark
373.019		- Čep za profil praga FT-0584 - End cap for threshold FT-0584	TPV	
373.020		- Čep za profil praga FT-0585 - End cap for threshold FT-0585	TPV	
363.014		- Čep za profil kombatute FT-0571 - End cap for flying mullion FT-0571	PVC	
363.016		- Čep za profil kombatute FT-0572 - End cap for flying mullion FT-0572	PVC	
373.027		- Čep za okapnicu F-1200 - End cap for drip cap profile F-1200	PVC	
373.057		- Čep za okapnicu F-1596 - End cap for drip cap profile F-1596	PVC	

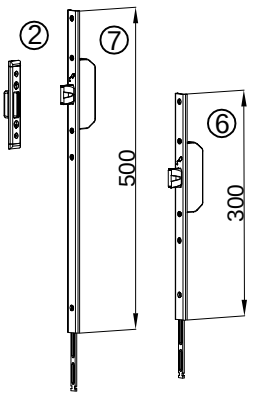
Oznaka Code	Izgled-presjek View - cross section	Opis Description	Materijal Material	Napomena Remark
374.043		- PVC (umetak) profil za vrata sa nadsvjetlom - PVC profile - additional profile in frame for door with top light	PVC	
374.048		- Pvc profil za parapetnu prečku - Pvc profile for transom-bottom sash profile	PVC	
370.070.01 03		- Maska sa klapnom za drenažni otvor - Oznaka proizvođača Master: 2145 - Boje: 01- bijela; 03- crna - Drainage slot mask with a flap - Manufacturer code Master: 2145 - Color: 01- white; 03- black	PVC	
370.000 370.001 370.002		- Podmetači za staklo - Glazing packers 3 mm 370.000 5 mm 370.001 7 mm 370.002	PVC	

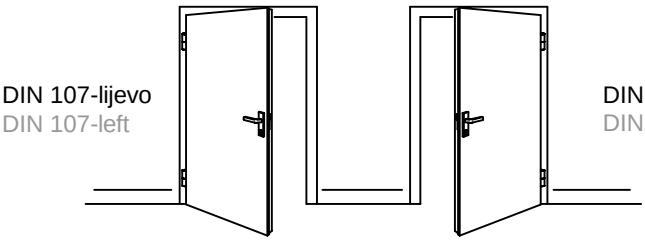
Mehanizmi
Mechanisms

Oznaka Code	Izgled-presjek View-cross section	Opis Description	Materijal Material	Napomena Remark
112.011.01 03 10		- Cilindrična šarka (Rollenband AT FEAL)- Dr.Hahn - Otvaranje unutra - Oznaka distributera GU: L-58R7516FA00 - bijela 19FA00 - crna 11FA00 - EV1 - Boje: 01- bijela; 03 - crna; 10 - EV1 - Barrel door hinge (Rollenband AT FEAL) - Dr. Hahn - inward opening - Distributor code GU: L-58R7516FA00 - bijela 19FA00 - crna 11FA00 - EV1 - Color: 01- white; 03 - black; 10 - EV1	Al.	
112.012.01 03 10		- Cilindrična šarka (Rollenband AT FEAL)- Dr. Hahn - Otvaranje vani - Oznaka distributera GU: L-58R7516FA01 - bijela 19FA01 - crna 11FA01 - EV1 - Boje: 01- bijela; 03 - crna; 10 - EV1 - Barrel door hinge (Rollenband AT FEAL) - Dr. Hahn - outward opening - Distributor code GU: L-58R7516FA01 - bijela 19FA01 - crna 11FA01 - EV1 - Color: 01- white; 03 - black; 10 - EV1	Al.	
112.013		- Šablon za cilindričnu šarku (Rollenband AT FEAL) -Dr. Hahn - otvaranje unutra (za obradu profila rama i krila) - Oznaka distributera GU: L-58T370B0020 - Drilling jig for the barrel door hinge (Rollenband AT FEAL) - Dr. Hahn - inward opening (for processing of the frame and leaf profile) - Distributor code GU: L-58T370B0020		
112.014		- Šablon za cilindričnu šarku (Rollenband AT FEAL) -Dr. Hahn - otvaranje vani (za obradu profila rama i krila) - Oznaka distributera GU: L-58T370B0019 - Drilling jig for the barrel door hinge (Rollenband AT FEAL) - Dr. Hahn - outward opening (for processing of the frame and leaf profile) - Distributor code GU: L-58T370B0019		
115.016.01 02 03		- Skrivena šarka FEAL-GIESSE za vrata otvaranje unutra - Oznaka proizvođača Giesse: 00750410 -bijela 00750020 -siva 00750500 -crna - Boje: 01- bijela; 02 - siva; 03 - crna - Hide door hinge FEAL-GIESSE (door - inward opening) - Manufacturer code Giesse: 00750410 -white 00750020 -gray 00750500 -black - Color: 01- white; 02 - gray;03 - black	Al.	

Oznaka Code	Izgled-presjek View-cross section	Opis Description	Materijal Material	Napomena Remark
115.009.01 **02** **03**		- Cilindrična šarka FEAL-GIESSE za vrata Termo 85 VS otvaranje vani - Oznaka proizvođača Giesse: 06414410010FY -bijela 06414020010FY -siva 06414500010FY -crna - Boje: 01- bijela; 02 - siva;03 - crna - Barrel door hinge FEAL-GIESSE (Termo 85 VS - outward opening) - Manufacturer code Giesse: 06414410010FY -white 06414020010FY -gray 06414500010FY -black - Color: 01- white; 02 - gray;03 - black	Al.	
115.010.01 **02** **03**		- Cilindrična šarka FEAL-GIESSE za vrata Termo 85 VS i VP otvaranje unutra - Oznaka proizvođača Giesse: 06413410010FY -bijela 06413020010FY -siva 06413500010FY -crna - Boje: 01- bijela; 02 - siva;03 - crna - Barrel door hinge FEAL-GIESSE (Termo 85 VS and VP - inwards opening) - Manufacturer code Giesse: 06413410010FY -white 06413020010FY -gray 06413500010FY -black - Color: 01- white; 02 - gray;03 - black	Al.	

SIGURNOSNA BRAVA 35mm i 45mm SA TRI MJESTA KLJUČANJA - GU SECURY (MR2)
SAFETY LOCK 35mm and 45 mm WITH 3 LOCKING POINTS - GU SECURY (MR2)

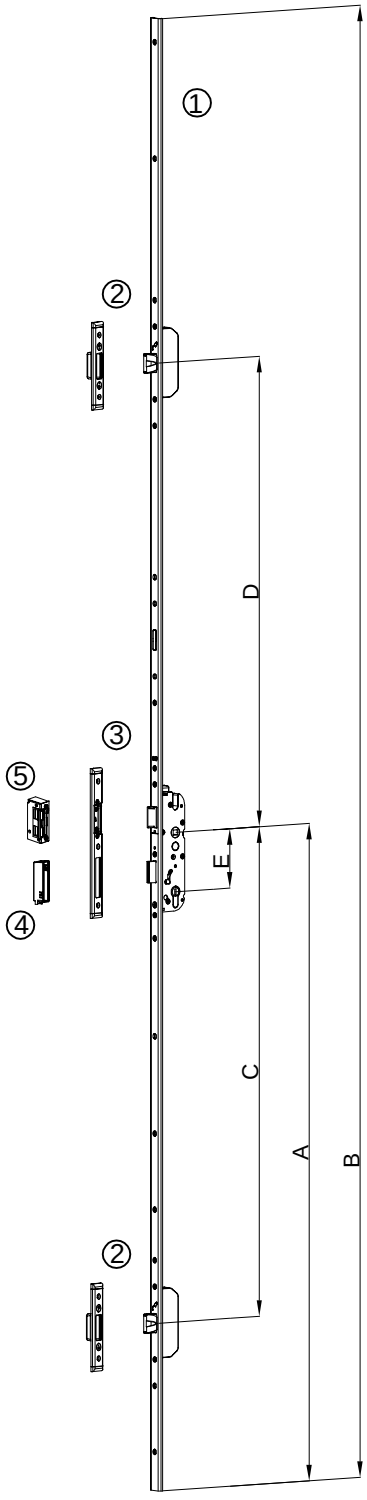




Okov za visine krila 1892 - 2209 mm
Hardware for leaf heights 1892 - 2209 mm

1) Brava GU Secury sa masivnim zasunima (MR2)
Multipoint lock with massive bolts GU Secury (MR2)

Oznaka FEAL Code FEAL	Dubina Depth	Potisna ploča Push plate	Visina ručke (A) Handle height (A)	Rastojanje (E) Distance (E)	Četvrtka Quarter	Visina brave (B) Lock height (B)	(C)	(D)	Oznaka proizvođača Manufacturer code
122.016	35	[24x6	1020	92	□8	2285	760	730	6-31542-17-0-8
122.015	45	[24x6	1020	92	□8	2285	760	730	6-31531-17-0-8



2) **122.028**
Prihvatna pločica (U) 24x6 mm
- oznaka proizvođača GU:
6-40032-AC-0-8
Striking plate (U) 24x6 mm
- manufacturer code GU:
6-40032-AC-0-8

3) **122.081** (Lijevi) ; **122.029** (desni)
Prihvatni lim (U) 24x6 mm,
- oznaka proizvođača GU:
6-37367-01-L-8 (Lijevi);
6-37367-01-R-8 (Desni)
Striking plate (U) 24x6 mm,
- manufacturer code GU:
6-37367-01-L-8 (Left);
6-37367-01-R-8 (Right)

4) **122.030**
Kućište zasuna brave (62 mm)
- oznaka proizvođača GU:
9-48553-03-0-6.....(Element po želji)
Latch bolt casement (62 mm).
- manufacturer code GU:
9-48553-03-0-6.....(Optional part)

5) **122.088**
Elektro otvarač vrata
GU ET8 9-24V,AC/DC, s klizačem za jezičak
- oznaka proizvođača GU: 6-35805-02-0-1
(Elektro otvarač se koristi po želji)
Electrical door opener
GU ET8 9-24V,AC/DC,with latch slide cover
- manufacturer code GU: 6-35805-02-0-1
(Electrical door opener is optional)

Dodatni okov za visine krila 2210-2409 mm
Additional hardware for leaf heights 2210-2409 mm

6) **122.102**
Secury produžetak brave MR2/24x6/300 mm
(dodatno gornje ključanje za visine krila 2210-2409mm)
- oznaka proizvođača GU: 6-39751-15-0-8 (Element po želji)
Secury lock extension MR2/24x6/500 mm
(additional upper locking for leaf heights 2210-2409 mm
- manufacturer code GU: 6-39751-15-0-8 (Optional part)

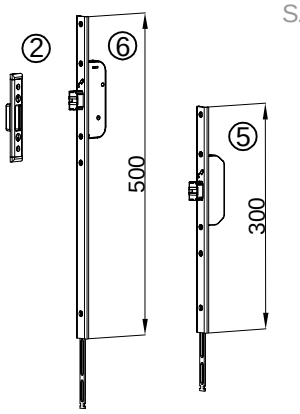
2) **122.028**
Prihvatna pločica (U) 24x6 mm
- oznaka proizvođača GU:
6-40032-AC-0-8
Striking plate (U) 24x6 mm
- manufacturer code GU:
6-40032-AC-0-8

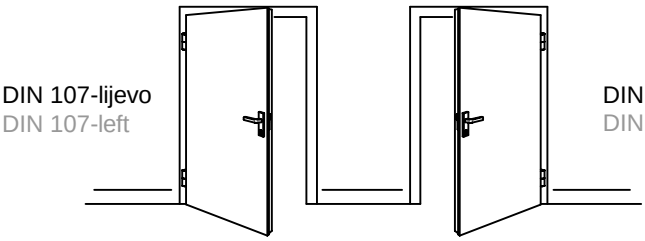
Dodatni okov za visine krila 2410-2800 mm
Additional hardware for leaf heights 2410-2800 mm

7) **122.083**
Secury produžetak brave MR2/24x6/500 mm
(dodatno gornje ključanje za visine krila 2410-2800 mm)
- oznaka proizvođača GU: 6-37395-15-0-8 (Element po želji)
Secury lock extension MR2/24x6/500 mm
(additional upper locking for leaf heights 2410-2800 mm
- manufacturer code GU: 6-37395-15-0-8 (Optional part)

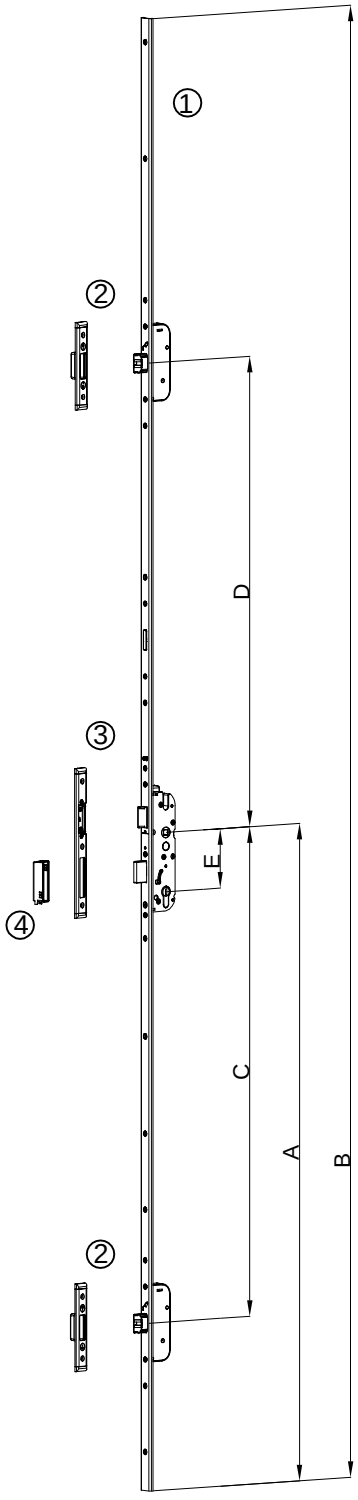
2) **122.028**
Prihvatna pločica (U) 24x6 mm
- oznaka proizvođača GU:
6-40032-AC-0-8
Striking plate (U) 24x6 mm
- manufacturer code GU:
6-40032-AC-0-8

SIGURNOSNA BRAVA 35mm i 45mm SA TRI MJESTA KLJUČANJA - GU SECURY (SECA)
SAFETY LOCK 35mm and 45 mm WITH 3 LOCKING POINTS - GU SECURY (SECA)





Okov za visine krila 1892 - 2209 mm
Hardware for leaf heights 1892 - 2209 mm



1) Brava GU Secury sa automatskim zasunima (SECA)
Multipoint lock with automatic bolts GU Secury (SECA)

Oznaka FEAL Code FEAL	Dubina Depth	Potisna ploča Push plate	Visina ručke (A) Handle height (A)	Rastojanje (E) Distance (E)	Četvrtka Quarter	Visina brave (B) Lock height (B)	(C)	(D)	Oznaka proizvođača Manufacturer code
122.020	35	[24x6	1020	92	□8	2285	760	730	6-28480-31-0-8
122.019	45	[24x6	1020	92	□8	2285	760	730	6-28484-31-0-8

2) **122.028**
Prihvatna pločica (U) 24x6 mm
- oznaka proizvođača GU:
6-40032-AC-0-8
Striking plate (U) 24x6 mm
- manufacturer code GU:
6-40032-AC-0-8

3) **122.081** (Lijevi) ; **122.029** (desni)
Prihvatni lim (U) 24x6 mm,
- oznaka proizvođača GU: 6-37367-01-L-8 (Lijevi);
6-37367-01-R-8 (Desni)
Striking plate (U) 24x6 mm,
- manufacturer code GU: 6-37367-01-L-8 (Left);
6-37367-01-R-8 (Right)

4) **122.030**
Kućište zasuna brave (62 mm)
- oznaka proizvođača GU:
9-48553-03-0-6 (Element po želji)
Latch bolt casement (62 mm).
- manufacturer code GU:
9-48553-03-0-6 (Optional part)

Dodatni okov za visine krila 2210-2409 mm
Additional hardware for leaf heights 2210-2409 mm

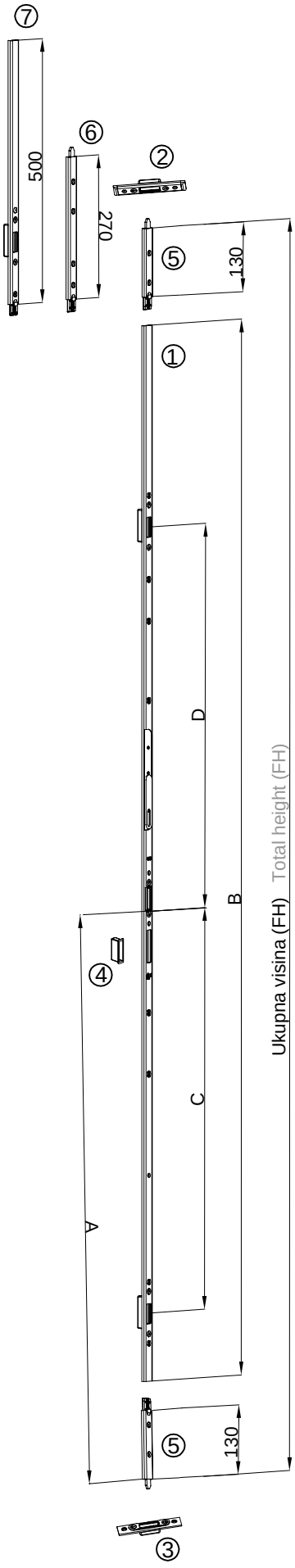
5) **122.103**
Secury produžetak brave SECA/24x6/300 mm
(dodatno gornje ključanje za visine krila 2210-2409mm)
- oznaka proizvođača GU: 6-39750-15-0-8 (Element po želji)
Secury lock extension SECA/24x6/300 m
(additional upper locking for leaf heights 2210-2409 mm
- manufacturer code GU: 6-39750-15-0-8 (Optional part)

2) **122.028**
Prihvatna pločica (U) 24x6 mm
- oznaka proizvođača GU:
6-40032-AC-0-8
Striking plate (U) 24x6 mm
- manufacturer code GU:
6-40032-AC-0-8

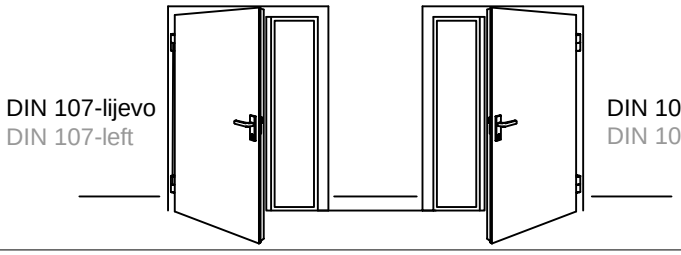
Dodatni okov za visine krila 2410-2800 mm
Additional hardware for leaf heights 2410-2800 mm

6) **122.084**
Secury produžetak brave SECA/24x6/500 mm
(dodatno gornje ključanje za visine krila 2410-2800 mm)
- oznaka proizvođača GU: 6-37394-15-0-8 (Element po želji)
Secury lock extension SECA/24x6/500 mm
(additional upper locking for leaf heights 2410-2800 mm
- manufacturer code GU: 6-37394-15-0-8 (Optional part)

2) **122.028**
Prihvatna pločica (U) 24x6 mm
- oznaka proizvođača GU:
6-40032-AC-0-8
Striking plate (U) 24x6 mm
- manufacturer code GU:
6-40032-AC-0-8



OKOV ZA KLJUČANJE POMOĆNOG KRILA ZA BRAVE MR2 I SECA
HARDWARE FOR LOCKING OF PASSIVE LEAF FOR LOCK MR2 AND SECA



Okov za ključanje pomoćnog krila za visine krila 2030 - 2286 mm
Hardware for locking of passive leaf for leaf heights 2030 - 2286 mm

1) Brava za ključanje pomoćnog krila
Multipoint lock with massive bolts GU Secury (MR2)

Oznaka FEAL Code FEAL	Tip Type	Potisna ploča Push plate	Zračnost Groove	Visina ručke (A) Handle height (A)	Visina brave (B) Lock height (B)	(C)	(D)	Oznaka proizvođača Manufacturer code
122.025	Lijeva Left	[24x8	12	1020	2000	760	730	6-37900-32-L-1
122.082	Desna Right	[24x8	12	1020	2000	760	730	6-37900-32-R-1

2) **122.028**
Gornja prihvatna pločica (U) 24x6 mm
- oznaka proizvođača GU: 6-40032-AC-0-8
Top striking plate (U) 24x6 mm
- manufacturer code GU:6-40032-AC-0-8

3) **122.080**
Donja prihvatna pločica (ravna) 24x3 mm
- oznaka proizvođača GU: 6-40032-DR-0-8
Bottom striking plate (flat) 24x3 mm
- manufacturer code GU:6-40032-DR-0-8

4) **122.087**
Kućište jezička brave
- oznaka proizvođača GU: 9-43952-01-0-6
Latch bolt casement
- manufacturer code GU:9-43952-01-0-6

5) **122.027** - Element za nastavljanje (130 mm)
- oznaka proizvođača GU: 6-35765-01-0-1
(ugrađuje se gore i dolje)
Shoot bolt unit (130 mm)
- manufacturer code GU: 6-35765-01-0-1
(montage on top and bottom)

Nastavci za ključanje pomoćnog krila za visine krila 2287 - 2329 mm
Shoot bolt units for locking of passive leaf for leaf heights 2287 - 2329 mm

6) **122.026 -** Element za nastavljanje (270 mm)
- oznaka proizvođača GU: 6-35765-41-0-1 ;
(ugrađuje se gore)
Shoot bolt unit (270 mm),
- manufacturer code GU: 6-35765-41-0-1 ; (montage on top)

5) **122.027** - (ugrađuje se dolje)
- (montage on bottom)

Nastavci i produžetak za ključanje pomoćnog krila za visine krila 2330 - 2529 mm
Shoot bolt units and lock extension for locking of passive leaf for leaf heights 2330 - 2529

5) **122.027** - (ugrađuje se gore i dolje)
- (montage on top and bottom)

7) **122.085 (lijevi) (left); 122.086 (desni) (right)**
Produžetak brave za pomoćno krilo 500 mm/U24x8/500NL1
- oznaka proizvođača GU:
6-37596-32-L-1 (lijevi), 6-37596-32-R-1 (desni)
Lock extension for passive leaf 500 mm/U24x8/500NL1
- manufacturer code GU:
6-37596-32-L-1 (left), 6-37596-32-R-1 (right)

Napomena:
Za visine krila od 2330 do 2529 mm potrebno je na glavno krilo postaviti produžetak brave od 300 mm 122.102 (MR2) ili 122.103 (SECA)
Remark:
For leaf heights 2330 - 2529, it is necessary to mount lock extesion of 300 mm 122.102 (MR2) or 122.103 (SECA) on the active leaf

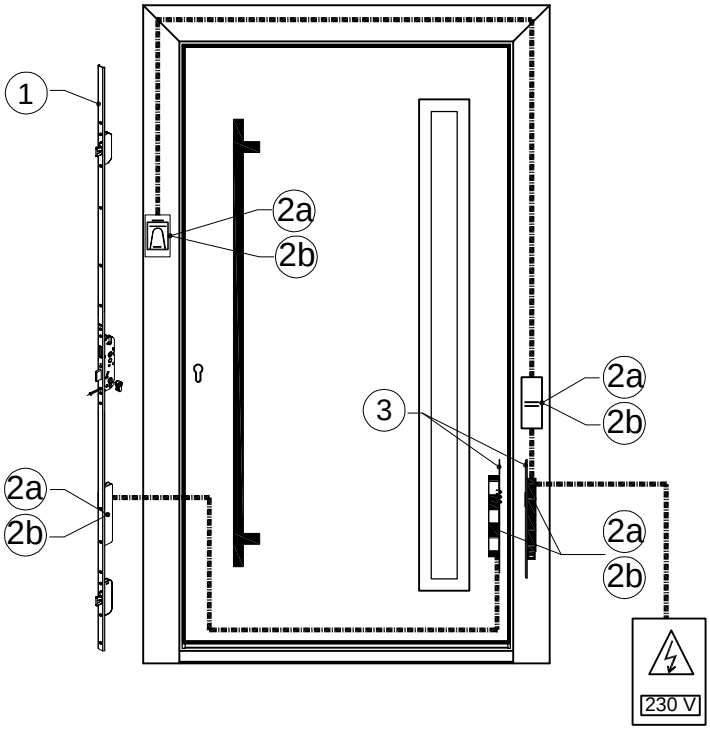
Nastavci i produžetak za ključanje pomoćnog krila za visine krila 2530 - 2800 mm
Shoot bolt units and lock extension for locking of passive leaf for leaf heights 2530 - 2800

5) **122.027** - (ugrađuje se dolje) (montage on bottom)
7) **122.085 (lijevi) (left); 122.086 (desni) (right)**

6) 122.026 - (ugrađuje se gore)
- (montage on top)

Napomena: Za visine krila iznad 2529 mm, potrebno je na glavno krilo postaviti produžetak brave 500mm 122.083 (MR2) ili 122.084 (SECA)
Remark: For leaf heights above 2529 mm it is necessary to mount lock extension of 500 mm 122.083 (MR2) or 122.084 (SECA) on the active leaf

Automatski kontroliran pristup ulaznim vratima s integriranjem upravljačke jedinice u okvir vrata (GU)
Automatically controlled access to the front door with the integration of the control unit into the door frame (GU)



1 **122.022** - Brava GU (SECA) - 35 mm
oznaka proizvođača GU: **6-28480-31-0-8**
122.019 - Brava GU (SECA) - 45 mm
oznaka proizvođača GU: **6-28484-31-0-8**

2a **142.058** - Set za automatski kontroliran pristup ulaznim vratima sa skenerom prstiju u okviru vrata
oznaka proizvođača GU: **H-01440-14-0-0**
- Set Secury A-offner elektro motor
  oznaka proizvođača GU: K-18153-01-0-0
- Secureconnect 200/prijenosnik napona i podataka
  oznaka proizvođača GU: B-55600-20-4-6
- Upravljačka jedinica (**skener prstiju** u okviru vrata) - Idencom
  oznaka proizvođača GU: B-55600-23-4-8
- Relej za ugradnju na okvir
  oznaka proizvođača GU: B-55600-21-4-6

2b **142.059** - Set za automatski kontroliran pristup ulaznim vratima s tipkovnicom u okviru vrata
oznaka proizvođača GU: **H-01440-24-0-0**
- Set Secury A-offner elektro motor
  oznaka proizvođača GU: K-18153-01-0-0
- Secureconnect 200/prijenosnik napona i podataka
  oznaka proizvođača GU: B-55600-20-4-6
- Upravljačka jedinica (**tipkovnica** u okviru vrata) - Idencom
  oznaka proizvođača GU: B-55600-20-4-8
- Relej za ugradnju na okvir
  oznaka proizvođača GU: B-55600-21-4-6

3 **142.014** - Prihvatnik na krilu i ramu za Secureconnect 200
oznaka proizvođača GU: **6-35515-04-0-1**
(potrebna 2 komada)

1 **122.022** - Multipoint lock GU (SECA) - 35 mm
manufacture code GU: **6-28480-31-0-8**
122.019 - Multipoint lock GU (SECA) - 45 mm
manufacturer code GU: **6-28484-31-0-8**

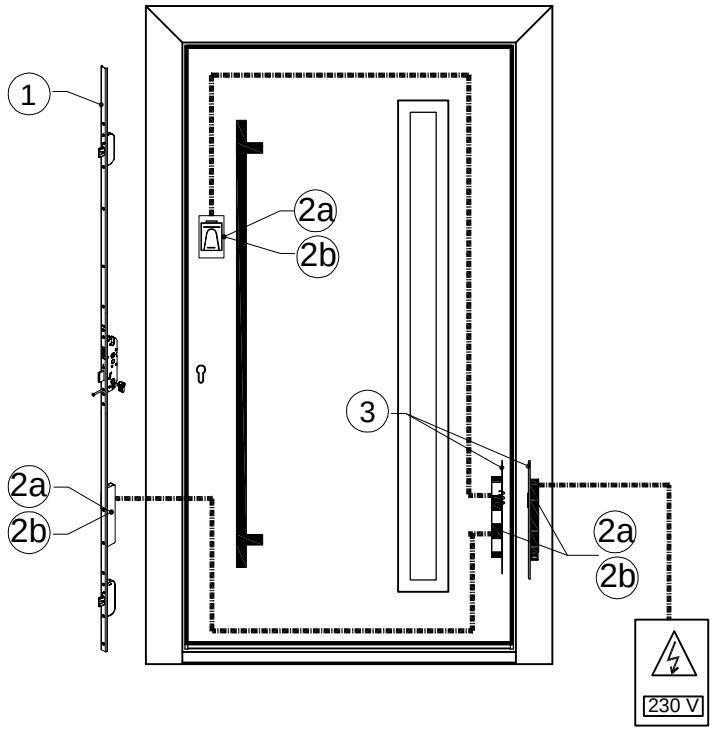
2a **142.058** - Set for automatically controlled access to the front door with fingerprint scanner in the door frame
manufacturer code GU: **H-01440-14-0-0**
- Set Secury A-offner electric motor
  manufacturer code GU: K-18153-01-0-0
- Secureconnect 200/power and date transmission unit
  manufacturer code GU: B-55600-20-4-6
- Control unit (**fingerprint scanner** in the door frame) - Idencom
  manufacturer code GU: B-55600-23-4-8
- Relay for installation in frame
  manufacturer code GU: B-55600-21-4-6

2b **142.059** - Set for automatically controlled access to the front door with code keypade in the door frame
manufacturer code GU: **H-01440-24-0-0**
- Set Secury A-offner electric motor
  manufacturer code GU: K-18153-01-0-0
- Secureconnect 200/power and date transmission unit
  manufacturer code GU: B-55600-20-4-6
- Control unit (**code keypad** in the door frame) - Idencom
  manufacturer code GU: B-55600-20-4-8
- Relay for installation in the door frame
  manufacturer code GU: B-55600-21-4-6

3 **142.014** - Acceptor for Secureconnect 200
manufacturer code GU: **6-35515-04-0-1**
(2 pieces are required)

Napomena:
Prilikom odabira seta za automatski kontroliran pristup potrebno je odabrati jedan od dva ponuđena seta, tj. set sa skenerom prstiju (2a) ili set s tipkovnicom (2b).
Note:
When choosing a set for automatic controlled access, it is necessary to choose one of the two offered sets, i.e. set with finger scanner (2a) or set with code keypad (2b).

Automatski kontroliran pristup ulaznim vratima s integriranjem upravljačke jedinice u krilo vrata (GU)
Automatically controlled access to the front door with the integration of the control unit into the door sash (GU)



1 **122.022** - Brava GU (SECA) - 35 mm
oznaka proizvođača GU: **6-28480-31-0-8**
122.019 - Brava GU (SECA) - 45 mm
oznaka proizvođača G-U: **6-28484-31-0-8**

2a **142.060** - Set za automatski kontroliran pristup ulaznim vratima sa skenerom prstiju u krilu vrata
oznaka proizvođača G-U: **H-01440-01-0-0**
- Set Secury A-offner elektro motor
  oznaka proizvođača GU: K-18153-01-0-0
- Secureconnect 200/prijenosnik napona i podataka
  oznaka proizvođača GU: B-55600-20-4-6
- Upravljačka jedinica (**skener prstiju** u krilu vrata) - Idencom
  oznaka proizvođača GU: B-55600-23-4-8

2b **142.061** - Set za automatski kontroliran pristup ulaznim vratima s tipkovnicom u krilu vrata
oznaka proizvođača GU: **H-01440-51-0-0**
- Set Secury A-offner elektro motor
  oznaka proizvođača GU: K-18153-01-0-0
- Secureconnect 200/prijenosnik napona i podataka
  oznaka proizvođača GU: B-55600-20-4-6
- Upravljačka jedinica (**tipkovnica** u krilu vrata) - Idencom
  oznaka proizvođača GU: B-55600-20-4-8

3 **142.014** - Prihvatnik na krilu i ramu za Secureconnect 200
oznaka proizvođača GU: **6-35515-04-0-1**
(potrebna 2 komada)

1 **122.022** - Multipoint lock GU (SECA) - 35 mm
manufacture code GU: **6-28480-31-0-8**
122.019 - Multipoint lock GU (SECA) - 45 mm
manufacturer code GU: **6-28484-31-0-8**

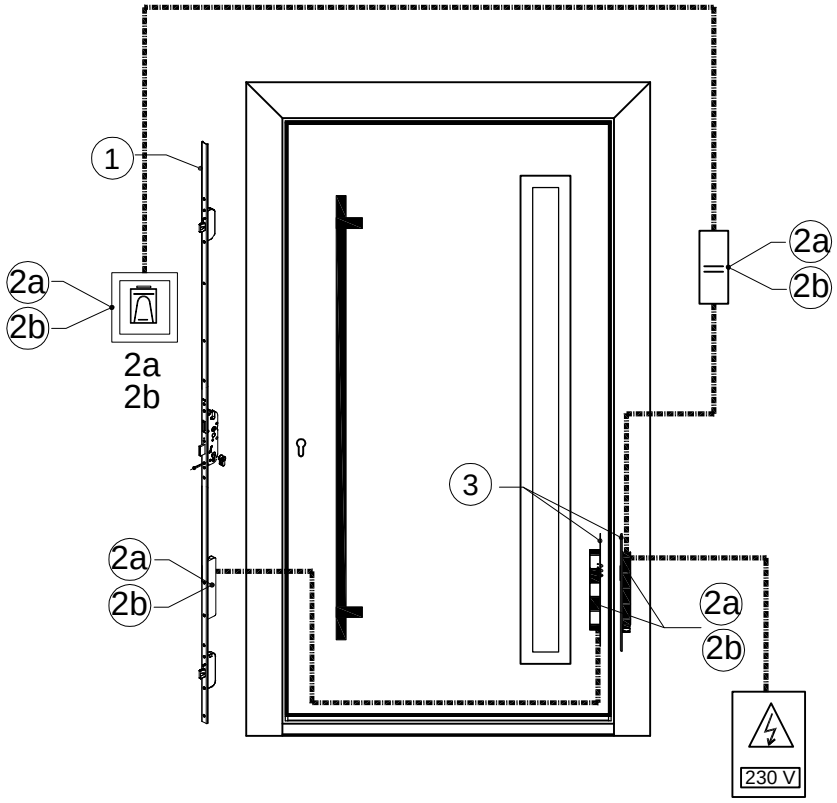
2a **142.060** - Set for automatically controlled access to the front door with fingerprint scanner in the door sash
manufacturer code GU: **H-01440-01-0-0**
- Set Secury A-offner electric motor
  manufacturer code GU: K-18153-01-0-0
- Secureconnect 200/power and date transmission unit
  manufacturer code GU: B-55600-20-4-6
- Control unit (**fingerprint scanner** in the door sash) - Idencom
  manufacturer code GU: B-55600-23-4-8

2b **142.061** - Set for automatically controlled access to the front door with code keypade in the door sash
manufacturer code GU: **H-01440-51-0-0**
- Set Secury A-offner electric motor
  manufacturer code GU: K-18153-01-0-0
- Secureconnect 200/power and date transmission unit
  manufacturer code GU: B-55600-20-4-6
- Control unit (**code keypad** in the door sash) - Idencom
  manufacturer code GU: B-55600-20-4-8

3 **142.014** - Acceptor for Secureconnect 200
manufacturer code GU: **6-35515-04-0-1**
(2 pieces are required)

Napomena:
Prilikom odabira seta za automatski kontroliran pristup potrebno je odabrati jedan od dva ponuđena seta, tj. set sa skenerom prstiju (2a) ili set s tipkovnicom (2b).
Note:
When choosing a set for automatic controlled access, it is necessary to choose one of the two offered sets, i.e. set with finger scanner (2a) or set with code keypad (2b).

Automatski kontroliran pristup ulaznim vratima s integriranjem upravljačke jedinice na zid (GU)
Automatically controlled access to the front door with the integration of the control unit into the wall (GU)



1 **122.022** - Brava GU (SECA) - 35 mm
oznaka proizvođača GU: **6-28480-31-0-8**
122.019 - Brava G-U (SECA) - 45 mm
oznaka proizvođača GU: **6-28484-31-0-8**

2a **142.062** - Set za automatski kontroliran pristup ulaznim vratima sa skenerom prstiju na zidu
oznaka proizvođača GU: **H-01440-61-0-0**

- Set Secury A-offner elektro motor
  oznaka proizvođača GU: K-18153-01-0-0
- Secureconnect 200/prijenosnik napona i podataka
  oznaka proizvođača GU: B-55600-20-4-6
- Upravljačka jedinica (**skener prstiju** na zidu) - Idencom
  oznaka proizvođača GU: B-55600-23-1-8
- Relej za ugradnju na zid

2b **142.063** - Set za automatski kontroliran pristup ulaznim vratima s tipkovnicom na zidu
oznaka proizvođača GU: **H-01440-73-0-0**

- Set Secury A-offner elektro motor
  oznaka proizvođača GU: K-18153-01-0-0
- Secureconnect 200/prijenosnik napona i podataka
  oznaka proizvođača GU: B-55600-20-4-6
- Upravljačka jedinica (**tipkovnica** na zidu) - Idencom
  oznaka proizvođača GU: B-55600-20-1-8
- Relej za ugradnju u zid

3 **142.014** - Prihvatnik na krilu i ramu za Secureconnect 200
oznaka proizvođača GU: **6-35515-04-0-1**
(potrebna 2 komada)

1 **122.022** - Multipoint lock GU (SECA) - 35 mm
manufacture code GU: **6-28480-31-0-8**
122.019 - Multipoint lock GU (SECA) - 45 mm
manufacturer code GU: **6-28484-31-0-8**

2a **142.062** - Set for automatically controlled access to the front door with fingerprint scanner on the wall
manufacturer code GU: **H-01440-61-0-0**

- Set Secury A-offner electric motor
  manufacturer code GU: K-18153-01-0-0
- Secureconnect 200/power and date transmission unit
  manufacturer code GU: B-55600-20-4-6
- Control unit (**fingerprint scanner** on the wall) - Idencom
  manufacturer code GU: B-55600-23-1-8
- Relay for installation in the wall

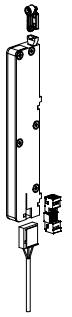
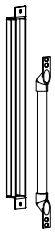
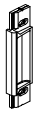
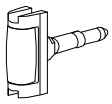
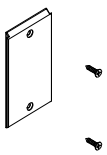
2b **142.063** - Set for automatically controlled access to the front door with code keypad on the wall
manufacturer code GU: **H-01440-73-0-0**

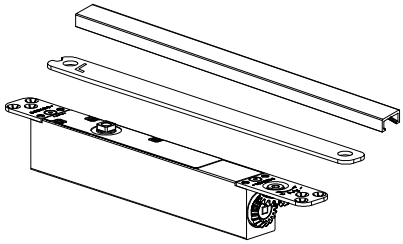
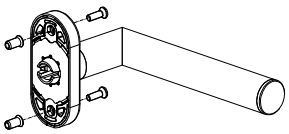
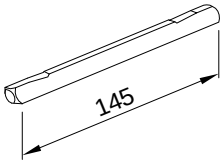
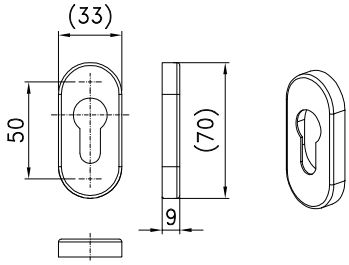
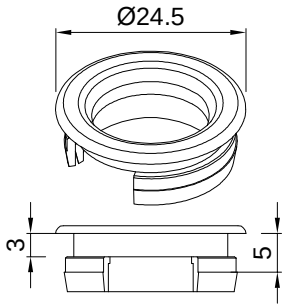
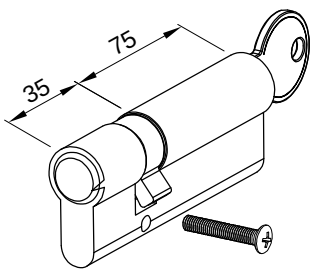
- Set Secury A-offner electric motor
  manufacturer code GU: K-18153-01-0-0
- Secureconnect 200/power and date transmission unit
  manufacturer code GU: B-55600-20-4-6
- Control unit (**code keypad** on the wall) - Idencom
  manufacturer code GU: B-55600-20-1-8
- Relay for installation in the wall

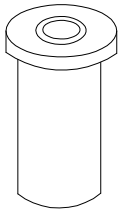
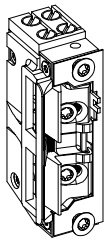
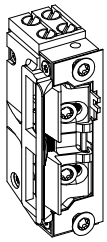
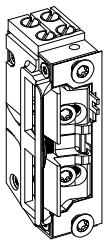
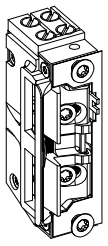
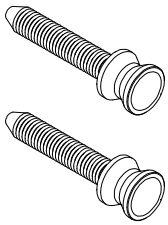
3 **142.014** - Acceptor for Secureconnect 200
manufacturer code GU: **6-35515-04-0-1**
(2 pieces are required)

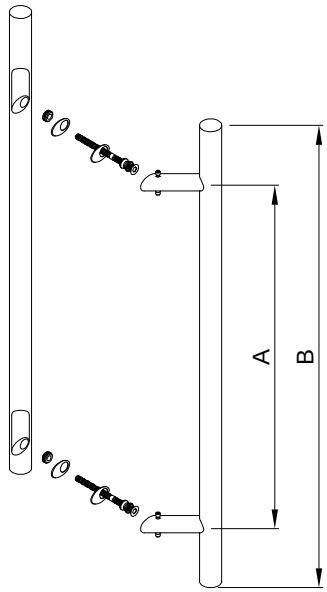
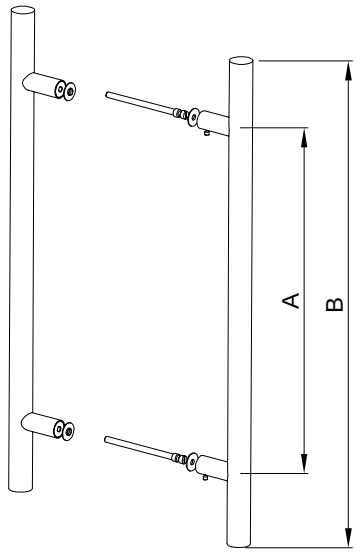
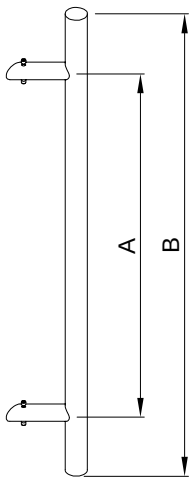
Napomena:
Prilikom odabira seta za automatski kontroliran pristup potrebno je odabrati jedan od dva ponuđena seta, tj. set sa skenerom prstiju (2a) ili set s tipkovnicom (2b).
Note:
When choosing a set for automatic controlled access, it is necessary to choose one of the two offered sets, i.e. set with finger scanner (2a) or set with code keypad (2b).

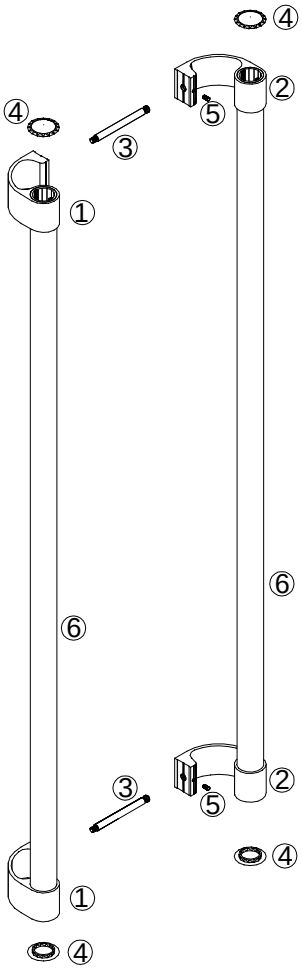
DODACI ZA SIGURNOSNE BRAVE 35mm i 45mm S TRI MJESTA KLJUČANJA - GU SECURY (MR2) I (SECA)
ACCESSORIES FOR SAFETY LOCKS 35 MM AND 45 MM WITH 3 LOCKING POINTS - GU SECURY (MR2) AND (SECA)

Oznaka Code	Izgled-presjek View-cross section	Opis Description	Materijal Material	Napomena Remark
142.056		- Set Secury A-offner Elektro motor (motorno otvaranje brave SECA) - Oznaka proizvođača GU: K-18153-01-0-0 - Set Secury A-offner electromotor (motorized opening for the SECA lock) - Manufacturer code GU: K-18153-01-0-0		
142.057		- Zaštita kabla 24x260x17 Ø10 do 100° otvaranje - Oznaka proizvođača GU: 6-29854-00-0-0 - Concealed cable duct 24x260x17 Ø10 up to 100° opening - Manufacturer code GU: 6-29854-00-0-0		
122.042		- Prihvatni dio za valjak (za bravu MR2) - Oznaka proizvođača GU: K-15597-01-0-6 - Receiving part for the roller (for lock MR2) - Manufacturer code GU: K-15597-01-0-6	Al Pvc	
122.040 **122.041**		- Valjak za bravu 35 mm (MR2) - Oznaka proizvođača GU: 6-36144-35-0-1 A - Roller for lock 35 mm (MR2) - Manufacturer code GU: 6-36144-35-0-1 A - Valjak za bravu 45 mm (MR2) - Oznaka proizvođača GU-BKS: B 36144-45-0-1 A - Roller for lock 45 mm (MR2) - Manufacturer code GU-BKS: B 36144-45-0-1 A		
122.056		- Pločica za pravilno vođenje jezička brave kod aluminijskih vrata (otvaranje vani) - Oznaka proizvođača GU-BKS: K-19307-01-0-6 - Plate for direction lacth bolt for aluminium doors (outward opening) - Manufacturer code GU-BKS: K-19307-01-0-6		

Oznaka Code	Izgled-presjek View-cross section	Opis Description	Materijal Material	Napomena Remark
142.018		- Skriveni zatvarač G-U VTS 735+GS VTS 73x20x12 - Oznaka proizvođača GU: K-1875-00-0-1 - Concealed door closer G-U VTS 735+GS VTS 73x20x12 - Manufacturer code GU: K-1875-00-0-1		
102.028		- Ručka za vrata s ovalnom rozetom serije BELCANTO H2.0 (s prihvatom četvrtke 8x8mm) - jednostrano ručka - Oznaka proizvođača GU-BKS: B-70130-63-0-8 - Završna obrada: Inox , a ostale boje na upit. - Door handle with oval rosette serie BELCANTO H2.0 (for spindle 8x8mm) - half lever set - Manufacturer code GU-BKS: B-70130-63-0-8 - Finish: stainless steel, other colours on request.		Naručuje se po komadu It is ordered per piece
102.025		- Četvrtka 8x8 mm - Oznaka proizvođača GU-BKS: B-78400-0O-0-1 (dužina četvrtke L=145 mm) - Square spindle 8x8 mm - Manufacturer code GU-BKS: B-78400-0O-0-1 (spindle length L=145 mm)		
122.098		- Ovalna rozeta za zaštitu cilindra serije BELCANTO - Oznaka proizvođača GU-BKS: B-72730-00-0-8 - Završna obrada: Inox , a ostale boje na upit. - Oval rosette for cylinder protection BELCANTO series - Manufacturer code GU-BKS: B-72730-00-0-8 - Finish: stainless steel, other colours on request.		Naručuje se po komadu It is ordered per piece
122.101		- Okrugla prstenasta rozeta za debljine profila do 5mm (za debljinu panela 3mm) - Oznaka proizvođača GU-BKS: L-58R25-05-0-8 -Round rosette for profile thickness up to 5 mm (for panel thickness up to 3 mm) - Manufacturer code GU	Inox	
122.095		- Uložak (cilindar) serije 88 - Oznaka proizvođača GU-BKS: B 8800 0560 (dužina cilindra 35-75mm) - Lock insert (cylinder) series 88 - Manufacturer code GU-BKS: B 8800 0560 (cylinder length 35-75mm)	Ni	

Oznaka Code	Izgled-presjek View-cross section	Opis Description	Materijal Material	Napomena Remark
120.005		- Podna čahura za osovinu Ø12 mm - Brass floor socket (inside hole Ø12 mm)	Mesing Brass	
122.036		- Elektro otvarač GU BKS sa radnom strujom (A) i ravnim poklopcem jezička (F) - Oznaka proizvođača GU: 6-35212-01-0 - Electric door opener GU BKS with fail-secure(A) and latch slide cover (F) - Manufacturer code GU: 6-35212-01-0		
122.037		- Elektro otvarač GU BKS sa radnom strujom (A) i ravnim poklopcem jezička (F) i mehaničkim otključavanjem (E) - Oznaka proizvođača GU: 6-35212-02-0 - Electric door opener GU BKS with fail-secure (A) and latch slide cover (F) and mechanical override (E) - Manufacturer code GU: 6-35212-02-0		
122.038		- Elektro otvarač GU BKS sa radnom strujom (A) i ravnim poklopcem jezička (F) i kontaktom (K) - Oznaka proizvođača GU: 6-35212-03-0 - Electric door opener GU BKS with fail-secure (A) and latch slide cover (F) and contact (K) - Manufacturer code GU: 6-35212-03-0		
122.039		- Otvarač GU BKS sa ravnim poklopcem jezička (F) i mehaničkim otključavanjem (E) - Oznaka proizvođača GU: 6-35212-05-0 - Electric door opener GU BKS with latch slide cover (F) and mechanical override (E) - Manufacturer code GU: 6-35212-05-0		
102.018		- Vijak za pričvršćivanje jednostranog rukohvata - Screw for fastening single side door pull handle		

Oznaka Code	Izgled-presjek View-cross section	Opis Description	Materijal Material	Napomena Remark
102.003		Obostrano kosi rukohvat Double side door pull handle (45 degrees) (A=300 mm; B=500 mm) (A=300 mm; B=500 mm)		
102.004		(A=450 mm; B=650 mm) (A=450 mm; B=650 mm)		
102.005		(A=600 mm; B=800 mm) (A=600 mm; B=800 mm)	Inox Inox	
102.006		(A=1200 mm; B=1400 mm) (A=1200 mm; B=1400 mm)		
102.007		(A=1300 mm; B=1800 mm) (A=1300 mm; B=1800 mm)		
102.008		Obostrano ravni rukohvat Double side door pull handle (90 degrees) (A=300 mm; B=500 mm) (A=300 mm; B=500 mm)		
102.009		(A=450 mm; B=650 mm) (A=450 mm; B=650 mm)		
102.010		(A=600 mm; B=800 mm) (A=600 mm; B=800 mm)	Inox Inox	
102.011		(A=1200 mm; B=1400 mm) (A=1200 mm; B=1400 mm)		
102.012		(A=1300 mm; B=1800 mm) (A=1300 mm; B=1800 mm)		
102.013		Jednostrani kosi rukohvat Single side door pull handle (45 degrees) (A=300 mm; B=500 mm) (A=300 mm; B=500 mm)		
102.014		(A=450 mm; B=650 mm) (A=450 mm; B=650 mm)		
102.015		(A=600 mm; B=800 mm) (A=600 mm; B=800 mm)	Inox Inox	
102.016		(A=1200 mm; B=1400 mm) (A=1200 mm; B=1400 mm)		
102.017		(A=1300 mm; B=1800 mm) (A=1300 mm; B=1800 mm)		

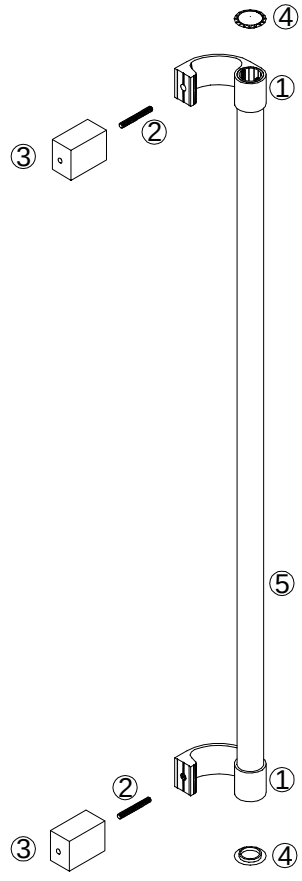


Osnovni komplet rukohvata za vrata.....100.005.01
Basic set-door pull handle 02
03
04
05

1. Držač vanjski	.....	kom.2
1. Exterior holder	.....	pcs .2
2. Držač unutarnji	.....	kom.2
2. Interior holder	.....	pcs .2
3. Inox osovinica l=112.5 mm	.....	kom.2
3. Inox spindle l=112.5 mm	.....	pcs .2
4. Pvc čep	.....	kom.4
4. Pvc cap	.....	pcs .4
5. Vijak M5x10 DIN 914	.....	kom.2
5. Screw M5x10 DIN 914	.....	pcs .2
6. F-0829	.....	kom.2
6. F-0829	.....	pcs .2

Napomena: Držač vanjski i unutarnji i F-0829 isporuka u boji po RAL karti.
Dužina profila F-0829 promjeniva.

Remark: Exterior and interior holder and profile F-0829 delivery in color by RAL card.
Variable lenght profile F-0829 .



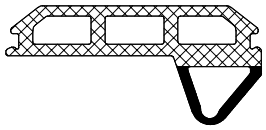
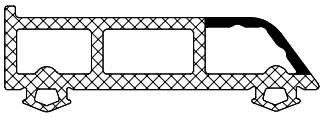
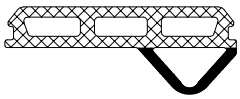
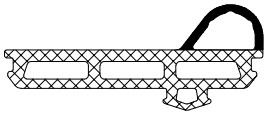
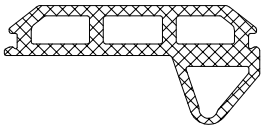
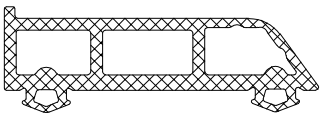
Osnovni komplet jednostranog rukohvata za VP vrata.....100.006.01
Basic set - single side door pull handle (Termo 85VP) 02
03
04
05

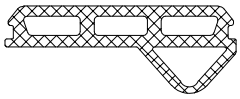
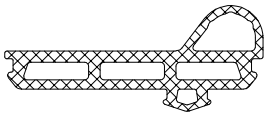
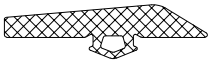
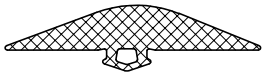
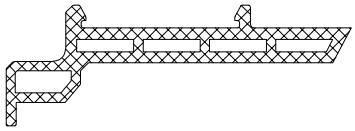
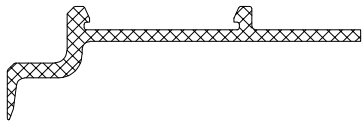
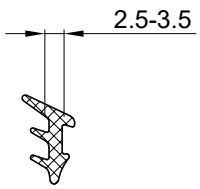
1. Držač vanjski	.....	kom.2
1. Exterior holder	.....	pcs .2
2. Inox navojna osovinica l=55 mm	.....	kom.2
2. Inox spindle l=55 mm	.....	pcs .2
3. Umetak u krilu	.....	kom.2
3. Sash insert	.....	pcs .2
4. Pvc čep	.....	kom.4
4. Pvc cap	.....	pcs .4
5. F-0829	.....	kom.1
5. F-0829	.....	pcs .1

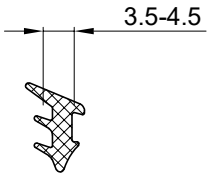
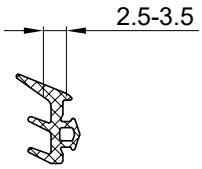
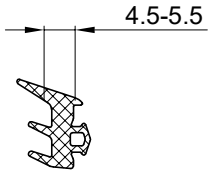
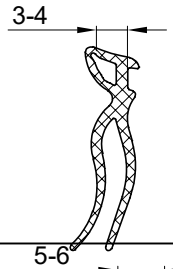
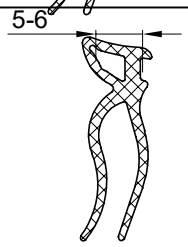
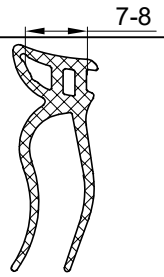
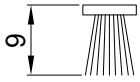
Napomena: Držač vanjski i F-0829 isporuka u boji po RAL karti.
Dužina profila F-0829 promjeniva.

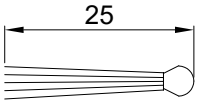
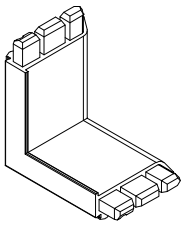
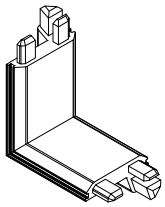
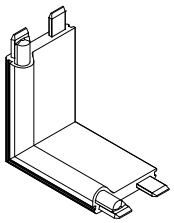
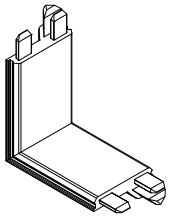
Remark: Exterior holder and profile F-0829 delivery in color by RAL card.
Variable lenght profile F-0829 .

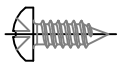
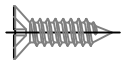
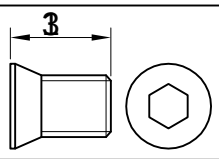
Brtvila
Gaskets

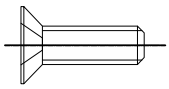
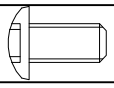
Oznaka Code	Izgled-presjek View- cross section	Opis Description	Materijal Material	Napomena Remark
334.006		- Centralna brtva krila - otvaranje unutra - Central gasket-sash-inward opening	TPE	73 ShA 30 ShA
334.005		- Centralna brtva rama - otvaranje unutra - Central gasket-frame-inward opening	TPE	73 ShA 30 ShA
334.010		- Centralna brtva krila - otvaranje vani - Central gasket-sash-outward opening	TPE	73 ShA 30 ShA
334.009		- Centralna brtva rama - otvaranje vani - Central gasket-frame-outward opening	TPE	73 ShA 30 ShA
321.006		- Brtva u krilu - Rebate gasket	EPDM	61 (ShA)
331.015		- Centralna brtva krila - otvaranje unutra - Central gasket-sash-inward opening	EPDM	50 (ShA)
331.010		- Centralna brtva rama - otvaranje unutra - Central gasket-frame-inward opening	EPDM	50 (ShA)

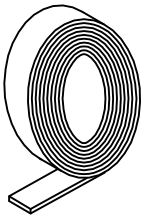
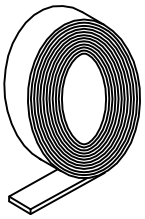
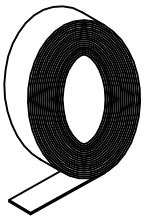
Oznaka Code	Izgled-presjek View- cross section	Opis Description	Materijal Material	Napomena Remark
331.016		- Centralna brtva krila - otvaranje vani - Central gasket-sash-outward opening	EPDM	50 (ShA)
331.014		- Centralna brtva rama - otvaranje vani - Central gasket-frame-outward opening	EPDM	50 (ShA)
331.013		- Brtva u pragu - otvaranje unutra - Threshold gasket - inward opening	EPDM	71 (ShA)
331.012		- Brtva u pragu - otvaranje vani - Threshold gasket - outward opening	EPDM	71 (ShA)
344.004		- Razdjelna brtva panelna ispuna - Stara oznaka VP- P 01 - Gasket (between sash and panel/ Termo 85 VP) - Former code VP- P 01	TPE	65 (ShA)
344.003		- Razdjelna brtva staklena ispuna - Stara oznaka VP- S 01 - Gasket (between sash ang glass panel/ Termo 85 VP) - Former code VP- S 01	TPE	65 (ShA)
311.001		- Brtva prema staklu /unutarnja/ - Stara oznaka - (921) - Glazing gasket /internal/ - Former code - (921)	EPDM	65 (ShA)

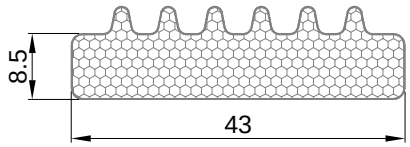
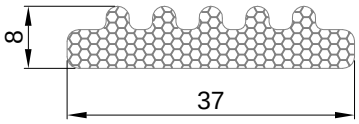
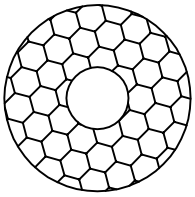
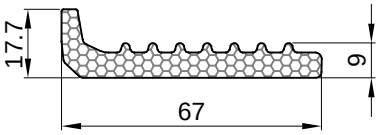
Oznaka Code	Izgled-presjek View- cross section	Opis Description	Materijal Material	Napomena Remark
311.002		-Brtva prema staklu /unutarnja/ -Stara oznaka - (918) -Glazing gasket /internal/ -Former code - (918)	EPDM	65 (ShA)
321.002		- Brtva prema staklu /vanjska/ - Stara oznaka - (Z111) - Glazing gasket /external/ - Former code - (Z111)	EPDM	65 (ShA)
321.003		- Brtva prema staklu /vanjska/ - Stara oznaka - (Z113) - Glazing gasket /external/ - Former code - (Z113)	EPDM	65 (ShA)
311.003		- Brtva prema staklu /unutarnja,nosi 3-4 mm/ - Glazing gasket /internal, 3-4 mm/	EPDM	65 (ShA)
311.004		- Brtva prema staklu /unutarnja,nosi 5-6 mm/ - Glazing gasket /internal, 5-6 mm/	EPDM	65 (ShA)
311.005		- Brtva prema staklu /unutarnja,nosi 7-8 mm/ - Glazing gasket /internal, 7-8 mm/	EPDM	65 (ShA)
347.003		- Četkasta brtva 7x9 - Star oznaka PB*HFC - Brush seal 7x9 - Former code PB*HFC	PP	

Oznaka Code	Izgled-presjek View- cross section	Opis Description	Materijal Material	Napomena Remark
347.001		- Četkasta brtva za vrata L=2500mm - Stara oznaka Z 802 - Brush seal L=2500mm - Former code Z 802	PP	
363.093		-Kutni umetak za centralnu brtvu 334.005 -Za profil rama (otvaranje unutra) -Corner insert for central gasket 334.005 -For frame profile (opening inside)	EPDM	30 ShA
363.094		-Kutni umetak za centralnu brtvu 334.006 -Za profil krila (otvaranje unutra) -Corner insert for central gasket 334.006 -For sash profile (opening inside)	EPDM	30 ShA
363.095		-Kutni umetak za centralnu brtvu 334.009 -Za profil rama (otvaranje vani) -Corner insert for central gasket 334.009 -For frame profile (opening outside)	EPDM	30 ShA
363.096		-Kutni umetak za centralnu brtvu 334.010 -Za profil krila (otvaranje vani) -Corner insert for central gasket 334.010 -For sash profile (opening outside)	EPDM	30 ShA

				
				
				
		 3		

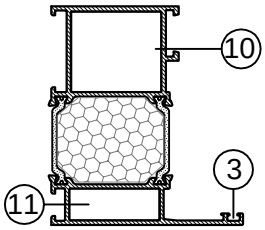
414.001		čiščenje		
414.002				
412.001				
413.002				
413.001				

Oznaka Code	Opis Description	Izgled-presjek View- cross section	Materijal Material	Napomena Remark
340.013		-Ispuna po opsegu stakla -Izoterm plamaframe -Underglass insulator -Izoterm plamaframe	PPE	
348.002		- Ispuna po opsegu stakla sa ljepljivom trakom-**PLAMAFRAME** - Underglass insulator-**PLAMAFRAME**	PPE	
340.035		-Ispuna po opsegu stakla i panela-Normatec Ø24 -Oznaka proizvođača: CPPBCH02400 -Underglass and panel insulator-Normatec Ø24 -Manufacterer code: CPPBCH02400		
311.004	 **M 1:2**	-Ispuna po opsegu stakla -Izoterm plamaframe -Underglass insulator -Izoterm plamaframe	LDPE	

Obrada i montaža
Processing and montage

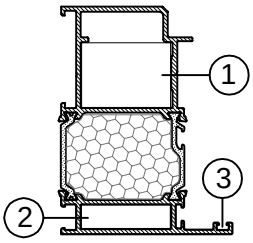
PRIKAZ KUTNIKA U PROFILIMA
DISPLAY OF CORNER BRACKETS IN PROFILES

FT-0513F



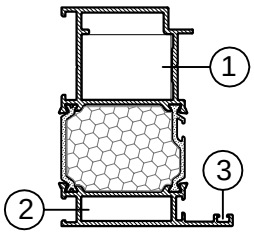
10	710.144
	710.145
11	710.091
3	730.001

FT-0556F



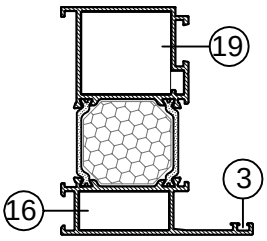
1	710.142
	710.143
2	710.141
3	730.001

FT-0551F



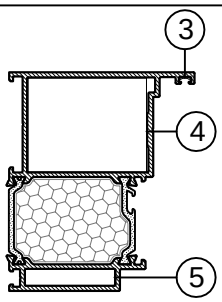
1	710.142
	710.143
2	710.141
3	730.001

FT-0557F



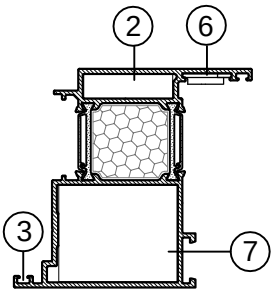
19	710.125
	710.126
16	710.172
	710.173
3	730.001

FT-0552F



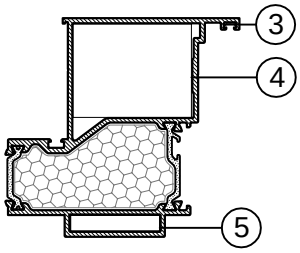
4	710.130
	710.131
5	710.140
3	730.001

FT-0561F



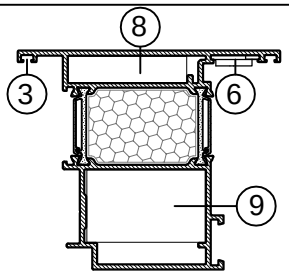
7	710.135
	710.136
2	710.141
3	730.001
6	731.010

FT-0553F



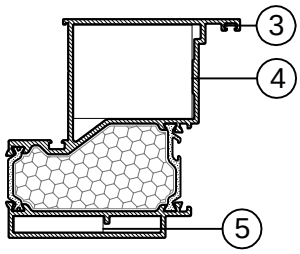
4	710.130
	710.131
3	730.001
5	710.140

FT-0562F



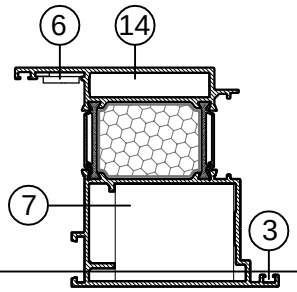
9	710.132
	710.133
8	710.134
3	730.001
6	731.010

FT-0554F



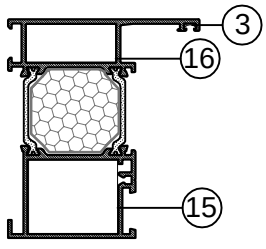
4	710.130
	710.131
3	730.001
5	710.140

FT-0563F



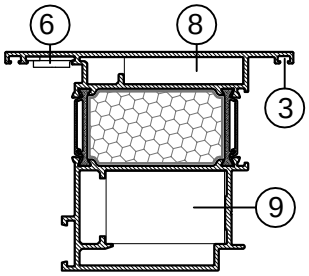
14	710.169
6	731.010
7	710.135
	710.136
3	730.001

FT-0555F



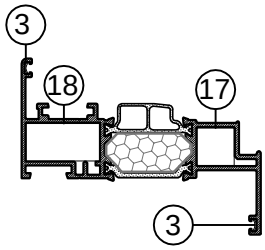
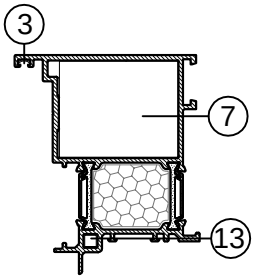
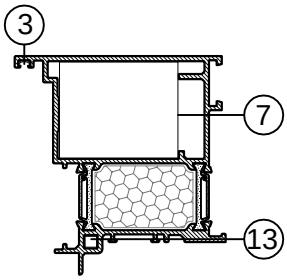
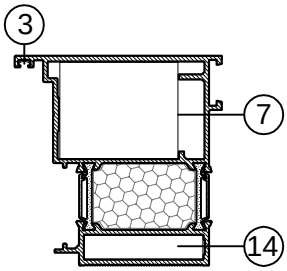
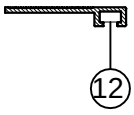
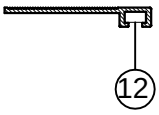
15	710.059
	710.072
	730.009
16	710.172
	710.173
3	730.001

FT-0564F

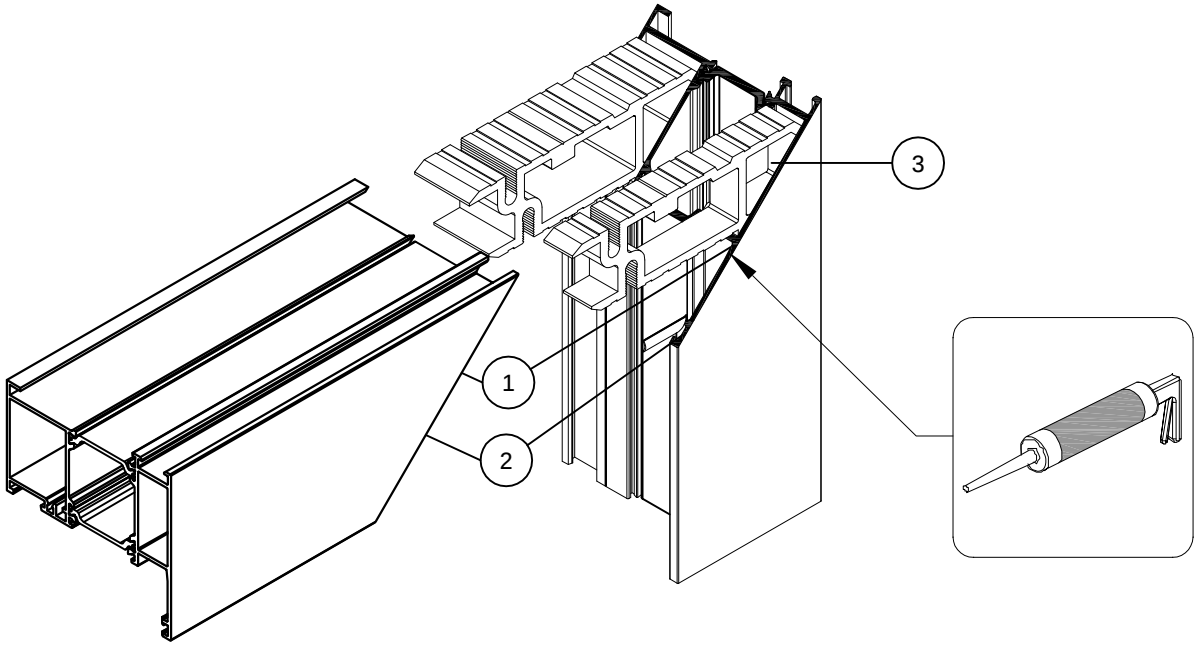


8	710.134
6	731.010
9	710.132
	710.133
3	730.001

PRIKAZ KUTNIKA U PROFILIMA
DISPLAY OF CORNER BRACKETS IN PROFILES

FT-0565F		17	710.484		
			710.485		
		18	710.450		
			710.458		
			730.008		
		3	730.001		
FT-0591F		7	710.135		
			710.136		
		3	730.001		
		13	710.203		
FT-0592F		7	710.135		
			710.136		
		3	730.001		
		13	710.203		
FT-0593F		7	710.135		
			710.136		
		14	710.169		
		3	730.001		
F-1093		12	710.015		
F-1205		12	710.015		

SPAJANJE PROFILA KUTNICIMA POD KUTEM OD 90°
CONNECTION OF PROFILES WITH CORNER BRACKETS AT 90° ANGLE



POSTUPAK SPAJANJA PROFILA:

1. Sve površine koje se spajaju-rezove očistiti i odmastiti odgovarajućim sredstvom /npr. "Henkel" - *Teroson VR 20 ili Teroson FL+* /.
2. Premazati sve površine koje se spajaju ljepilom za metal /npr. "Henkel" - *Teroson MS 939* /.
3. Ljepilo za metal ubrizgati u komore za kutnik (po opsegu komore)
4. Profile s kutnicima izravnati i spojiti
5. Dio ljepila koji iscuri između rezova očistiti sredstvom za čišćenje i odmašćivanje /npr. "Henkel" - *Teroson VR 20 ili Teroson FL+* /.

NAPOMENA:

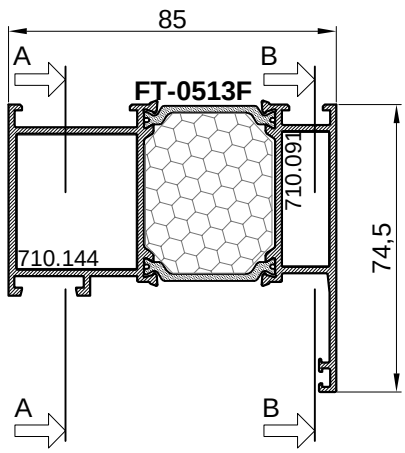
Ovaj postupak spajanja profila primjenjiv je za sve Feal-ove kutnike i njima odgovarajuće komore. Lijepljenjem rezova i kutnika ljepilima za metal, osigurava se potrebna zrako- i vodonepropusnosti spoja kao i dodatna mehanička čvrstoća spoja.

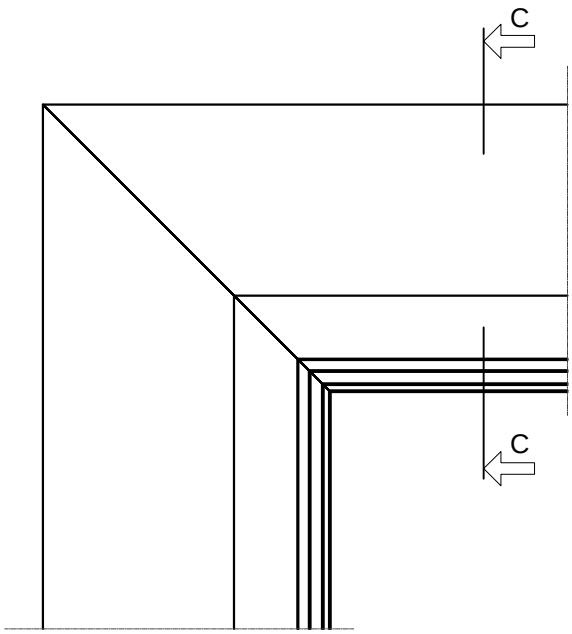
PROFILE CONNECTION PROCEDURE:

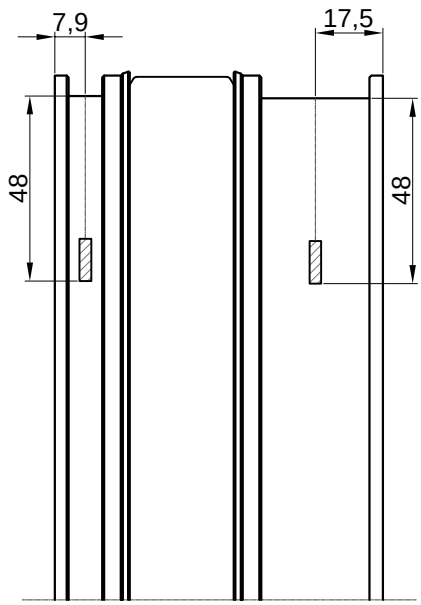
1. Clean and degrease all connecting surfaces with suitable products /e.g. "Henkel" - *Teroson VR 20 or Teroson FL+* /.
2. Smear connecting all surfaces with metal glue /e.g. "Henkel" - *Teroson MS 939* /.
3. Inject metal glue into chambers for the corner bracket (on chamber edges)
4. Level profiles with corner brackets and connect
5. Leaked glue that comes from the joints remove with cleaning and degreasing products /e.g. "Henkel" - *Teroson VR 20 ili Teroson FL+* /.

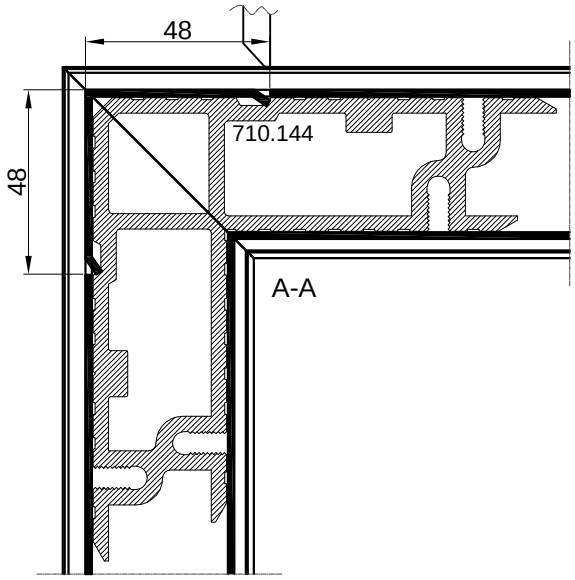
NOTE:

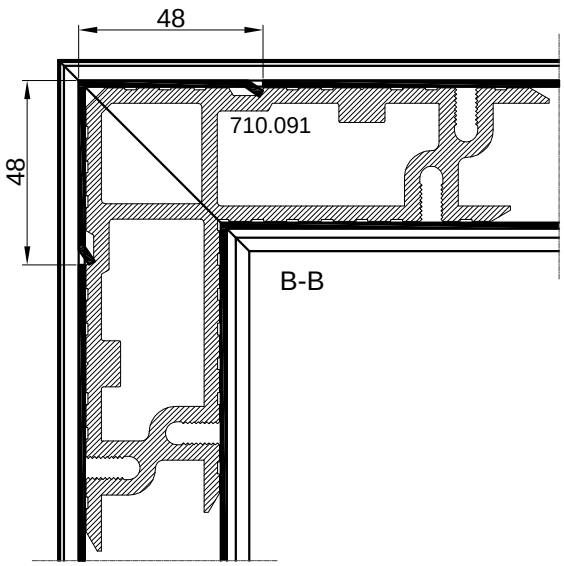
This profile connection procedure is applicable for all Feal corner brackets and their appropriate chambers. By gluing the profile and corner brackets with a metal glue, necessary air and water tightness of the joint as well as additional mechanical properties is ensured

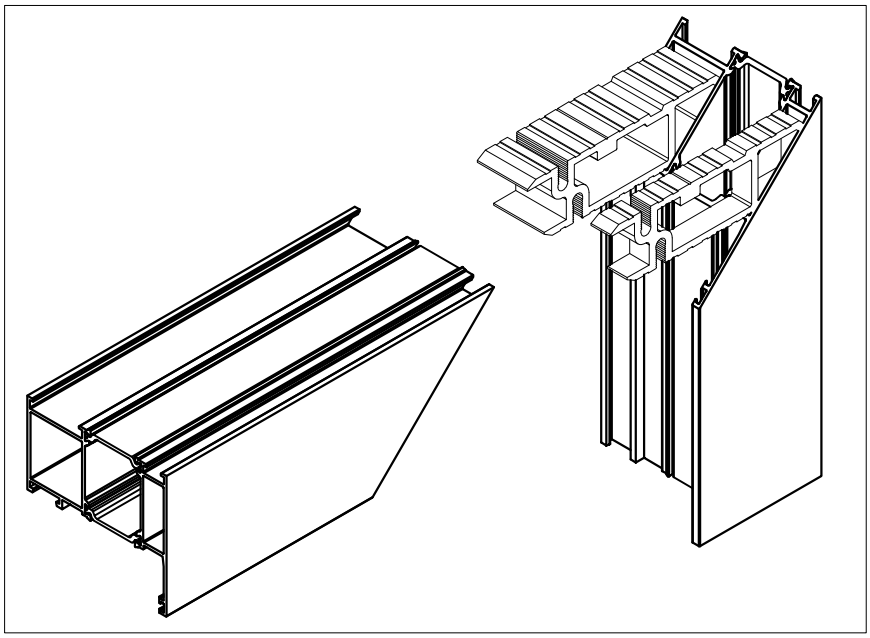




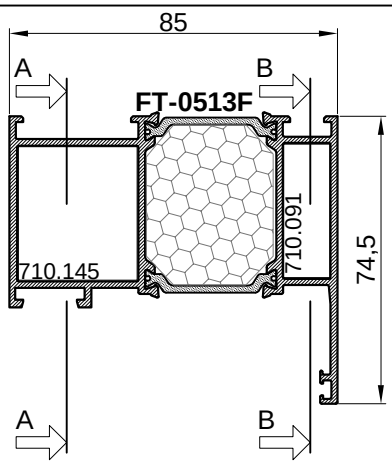


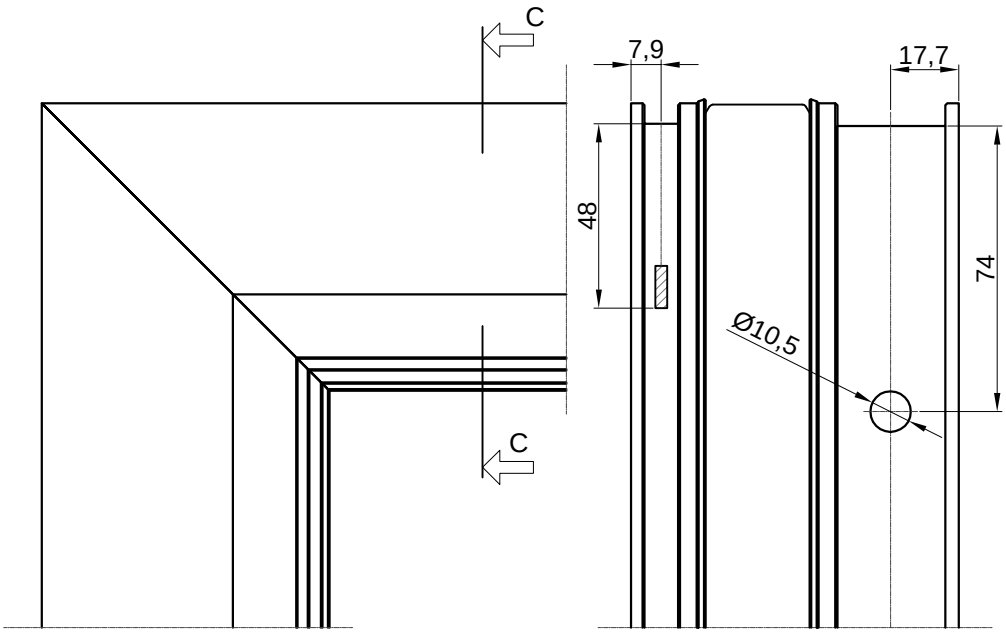


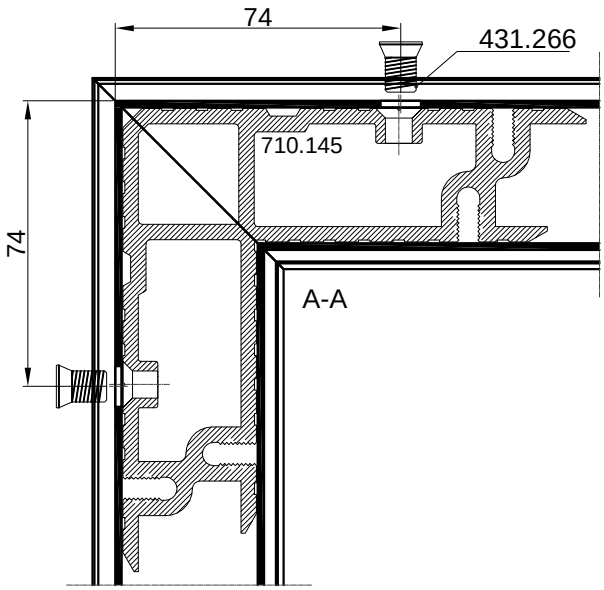


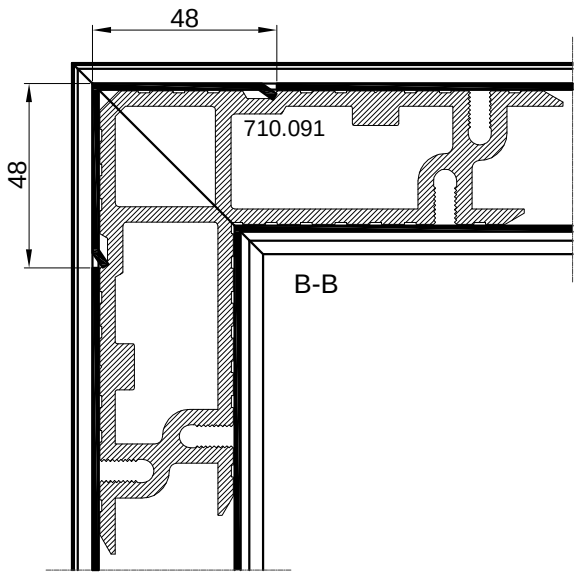


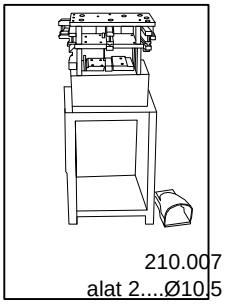
Spajanje profila FT-0513F kutnicima
Connection of profile FT-0513F with corner brackets

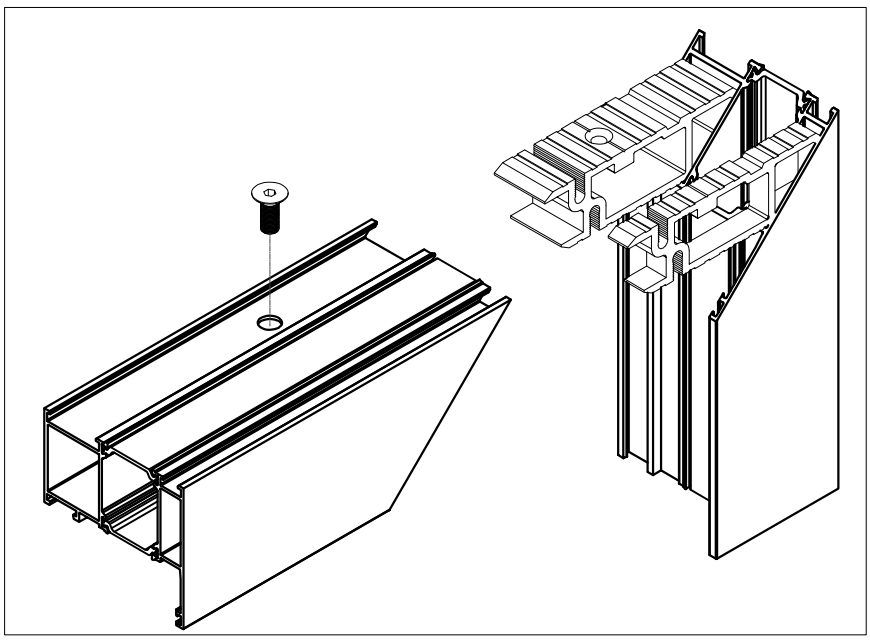




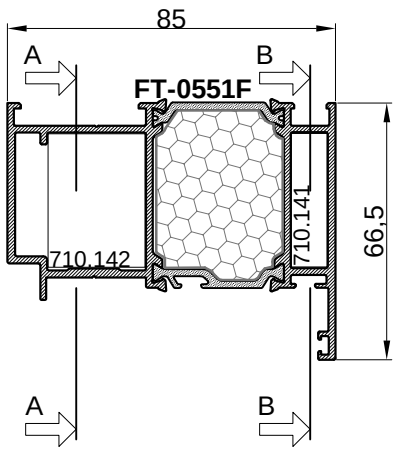


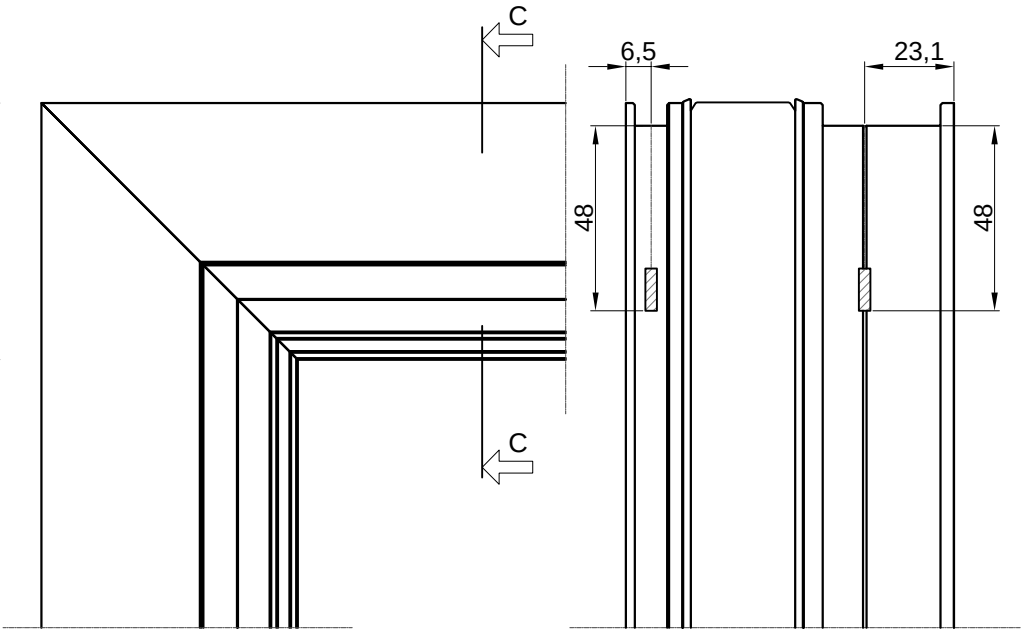


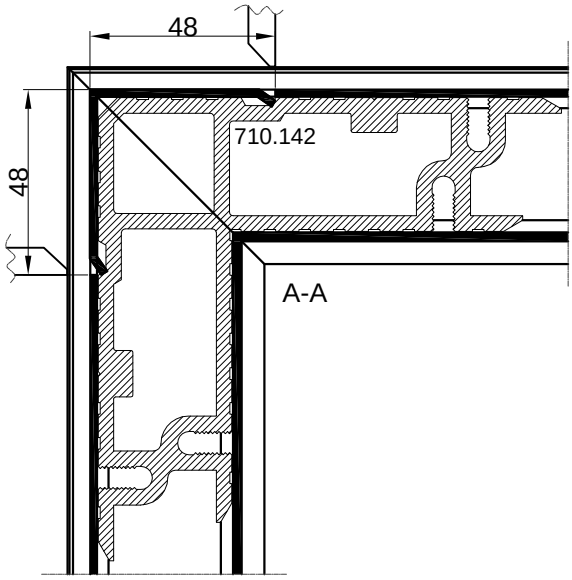


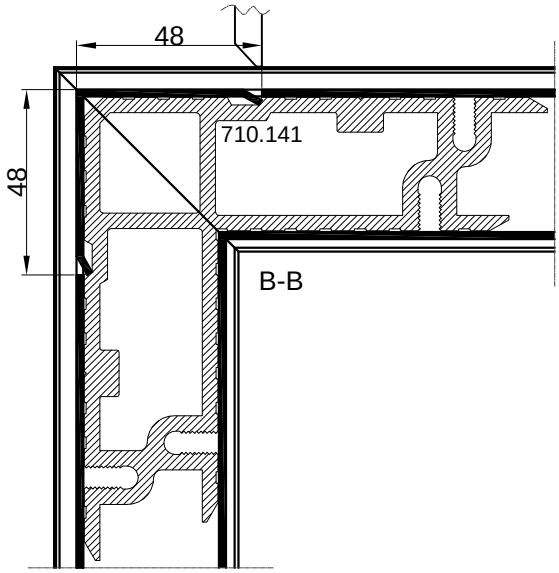


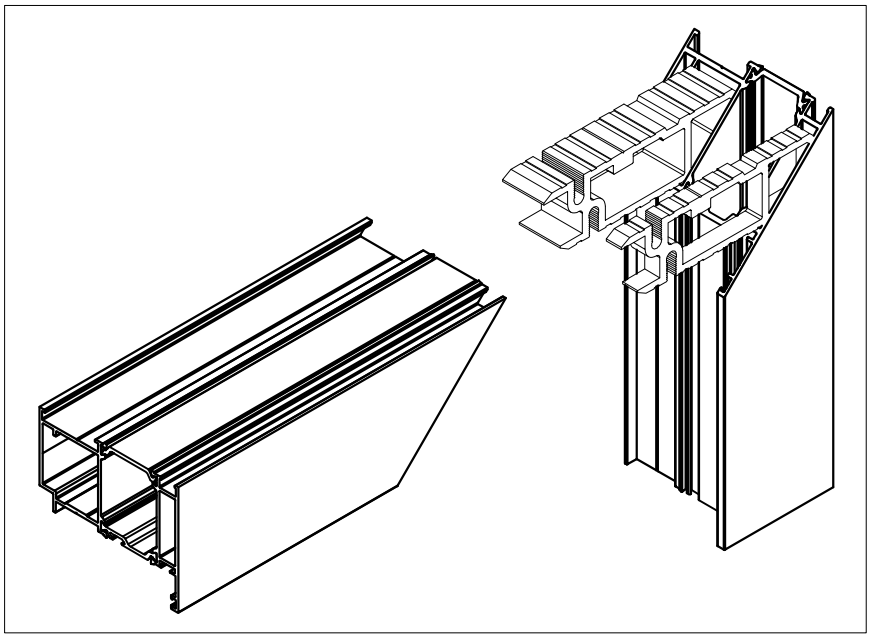
Spajanje profila FT-0513F kutnicima
Connection of profile FT-0513F with corner brackets



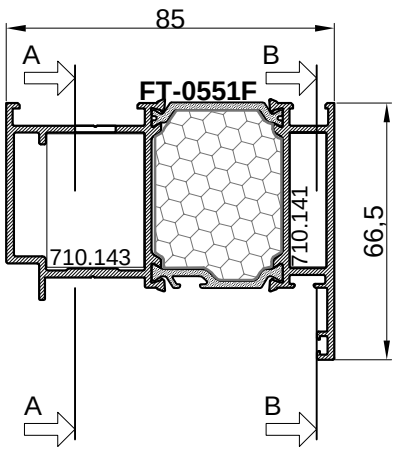


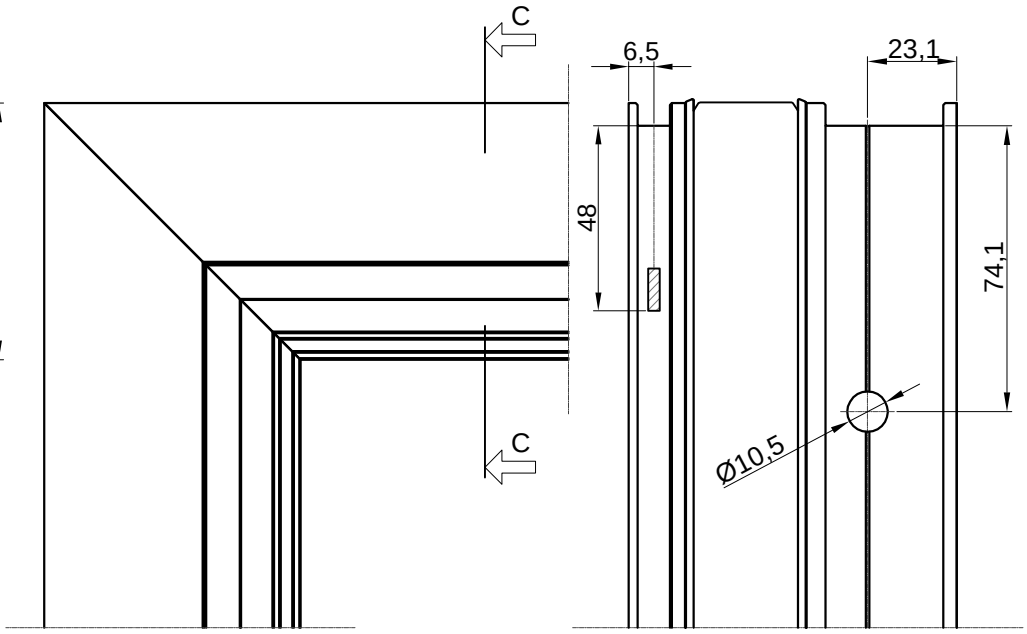


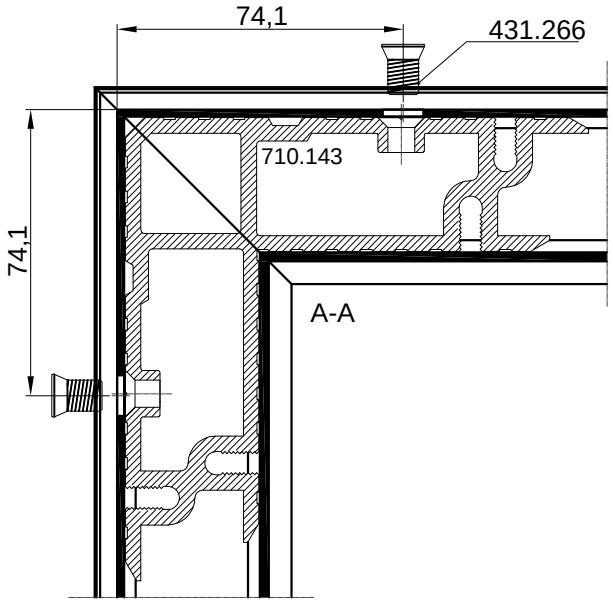


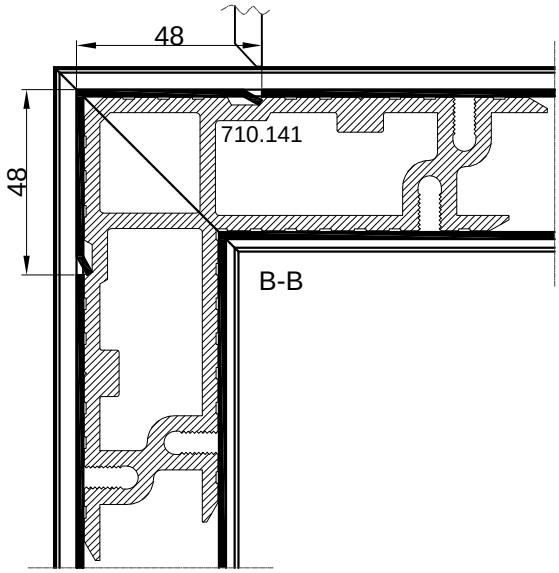


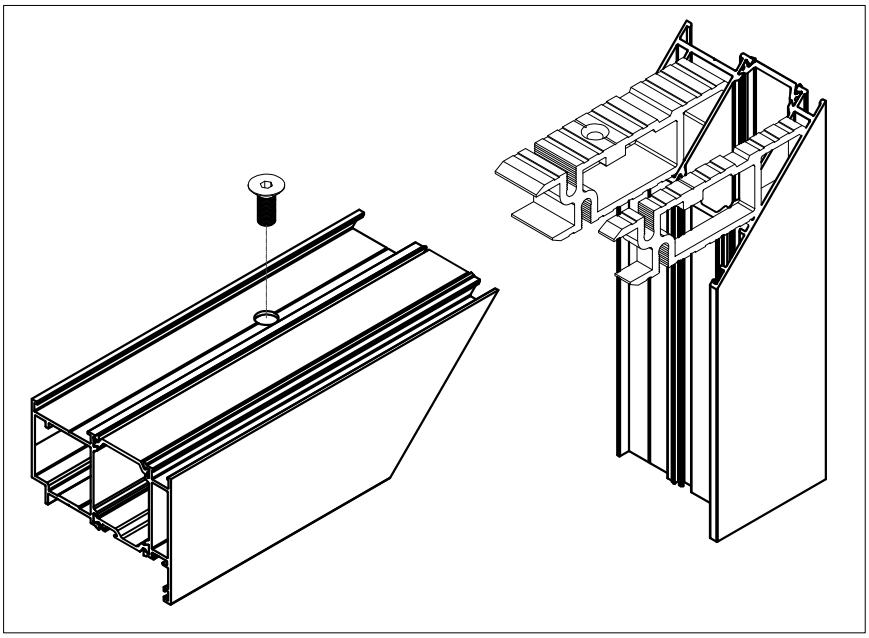
Spajanje profila FT-0551F kutnicima
Connection of profile FT-0551F with corner brackets

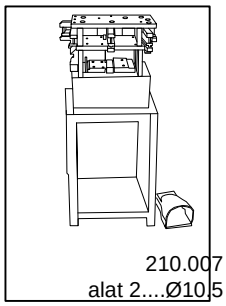




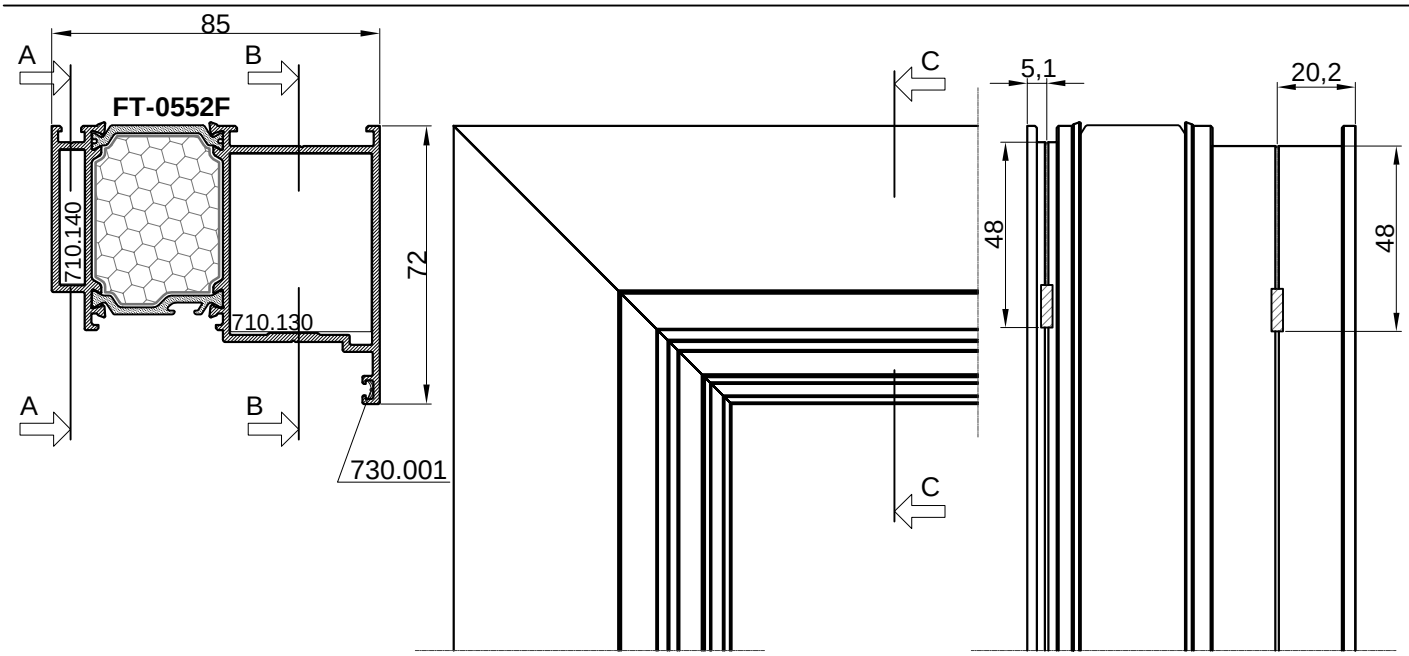


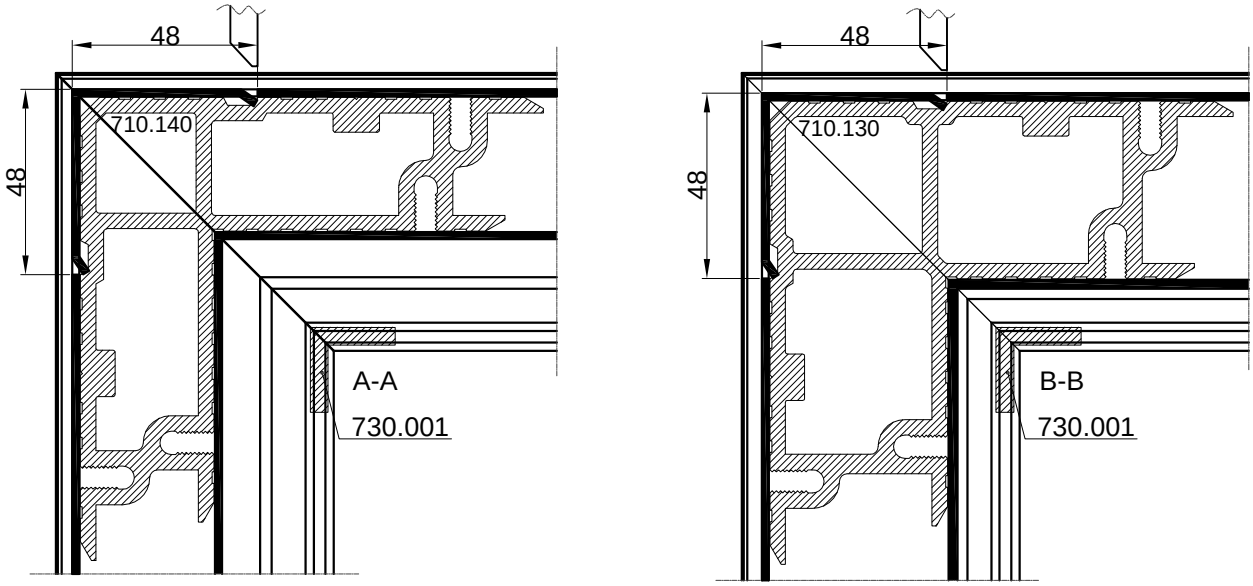


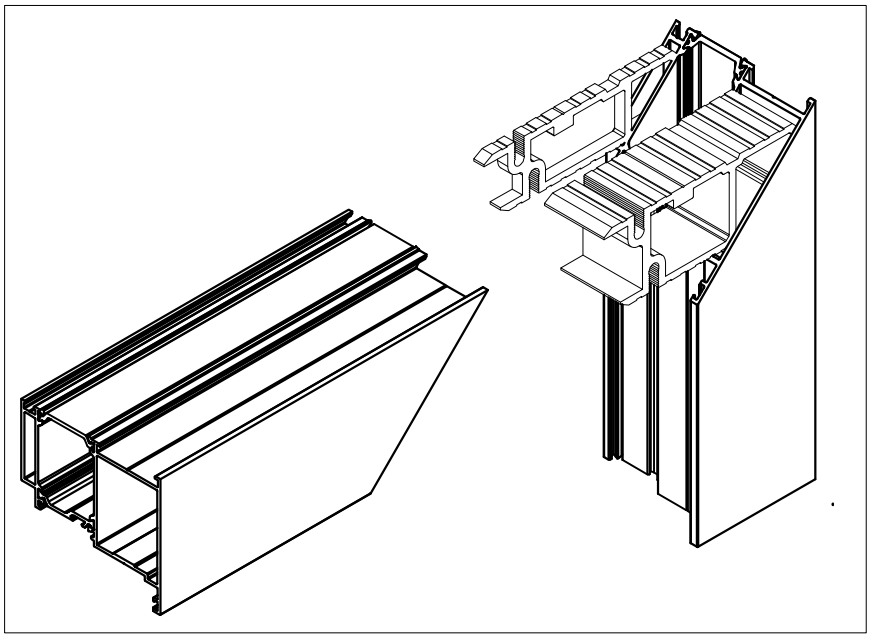




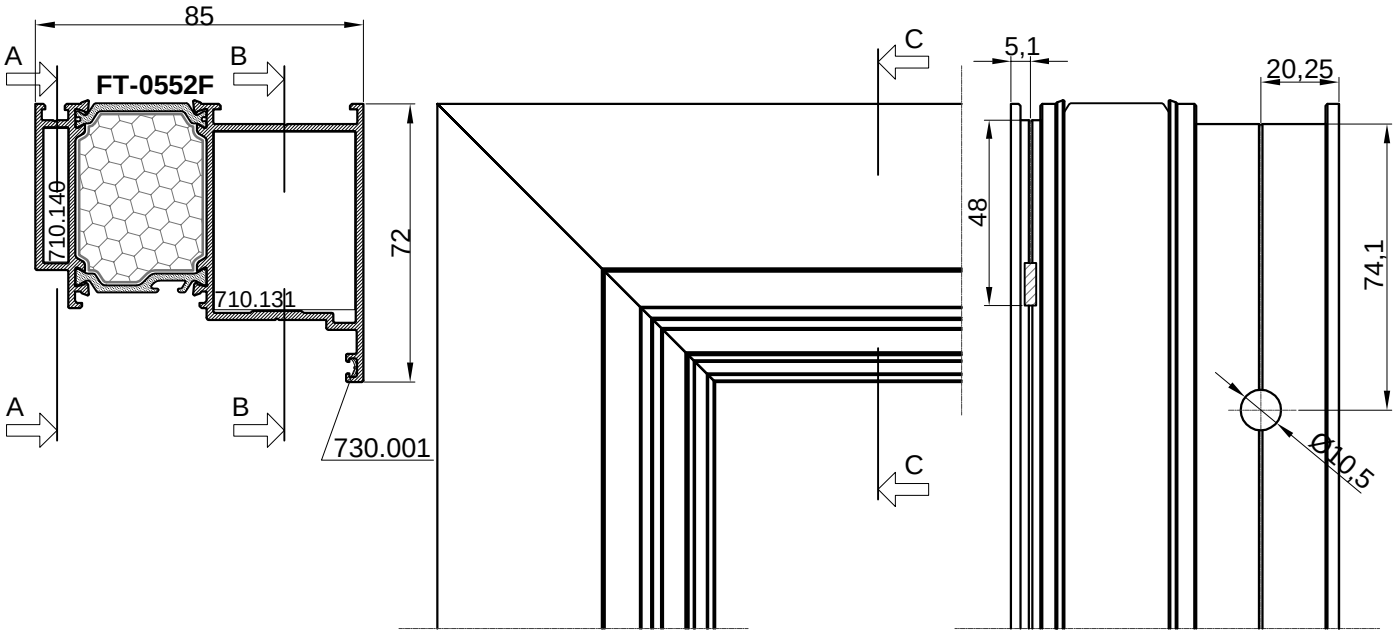
Spajanje profila FT-0551F kutnicima
Connection of profile FT-0551 F with corner brackets

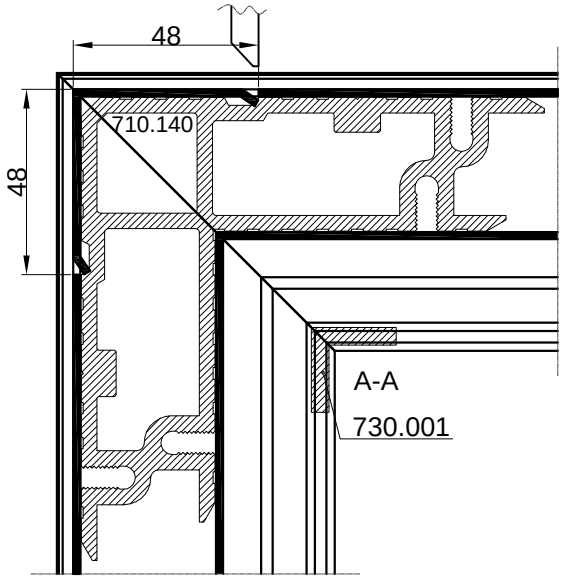


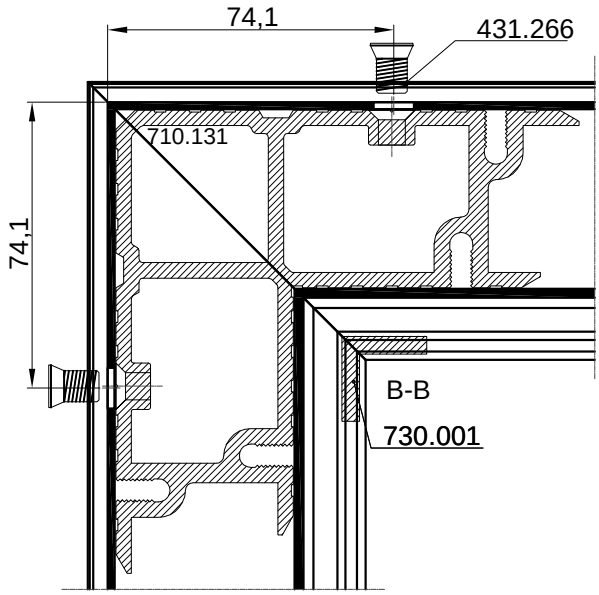


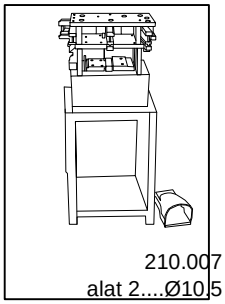


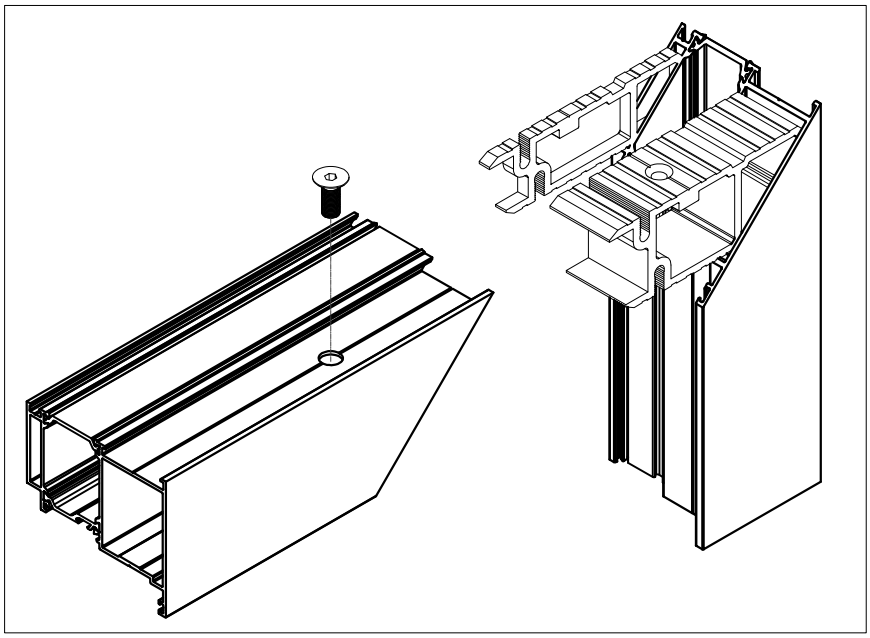
Spajanje profila FT-0552F kutnicima
Connection of profile FT-0552 F with corner brackets

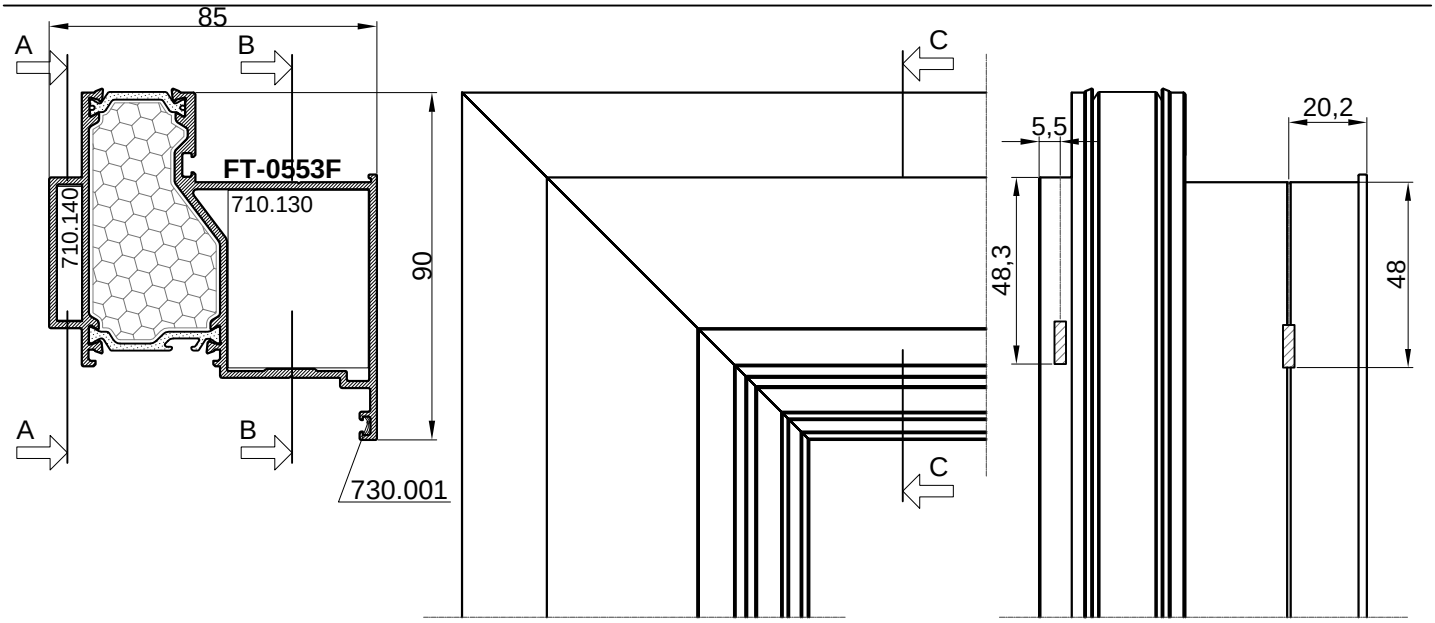

85
A
B
FT-0552F
710.140
710.131
72
730.001
C
5,1
20,25
48
74,1
Ø10,5

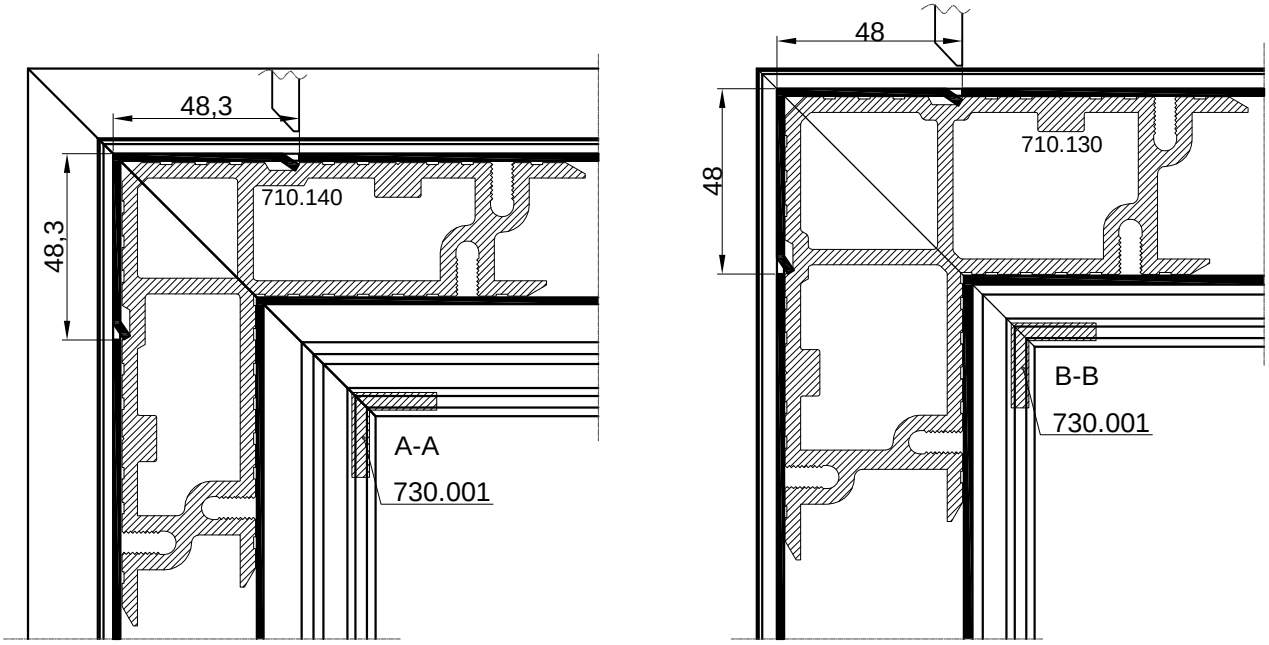

48
710.140
48
A-A
730.001

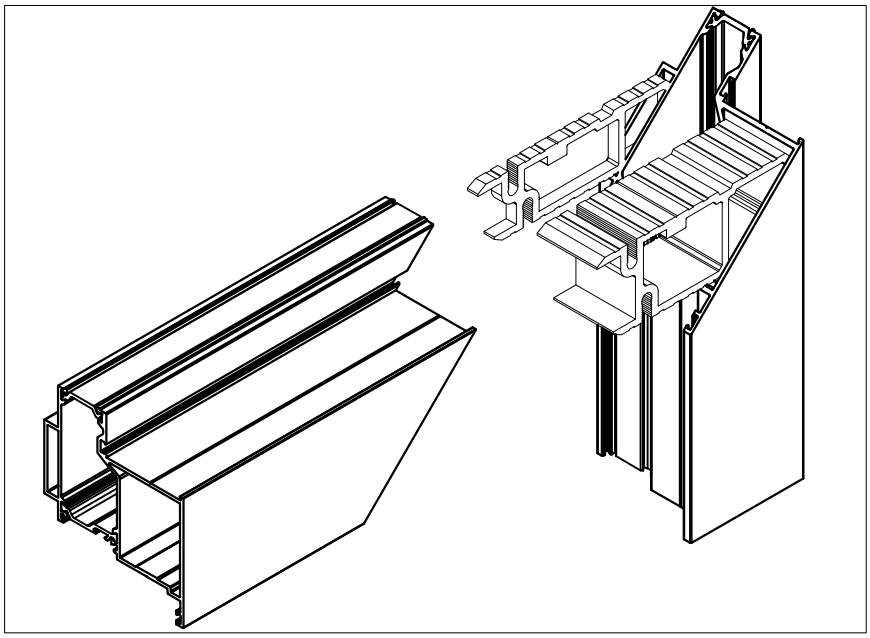

74,1
431.266
710.131
74,1
B-B
730.001


210.007
alat 2....Ø10,5

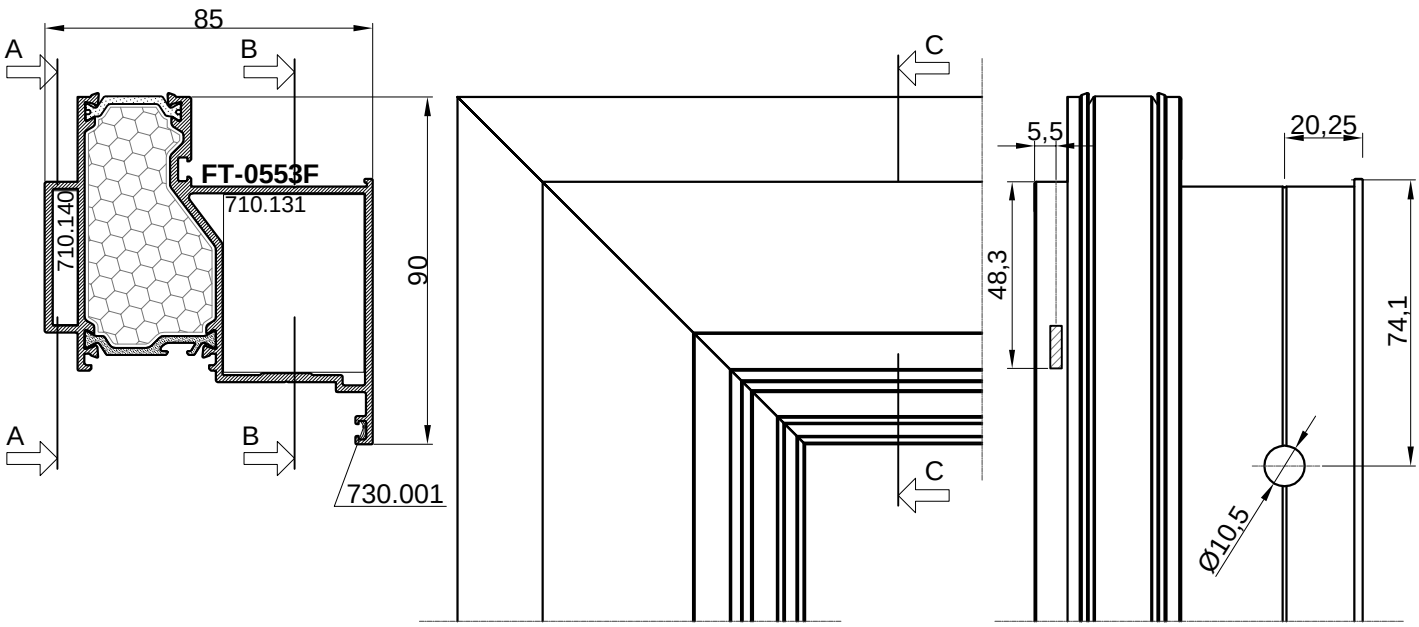


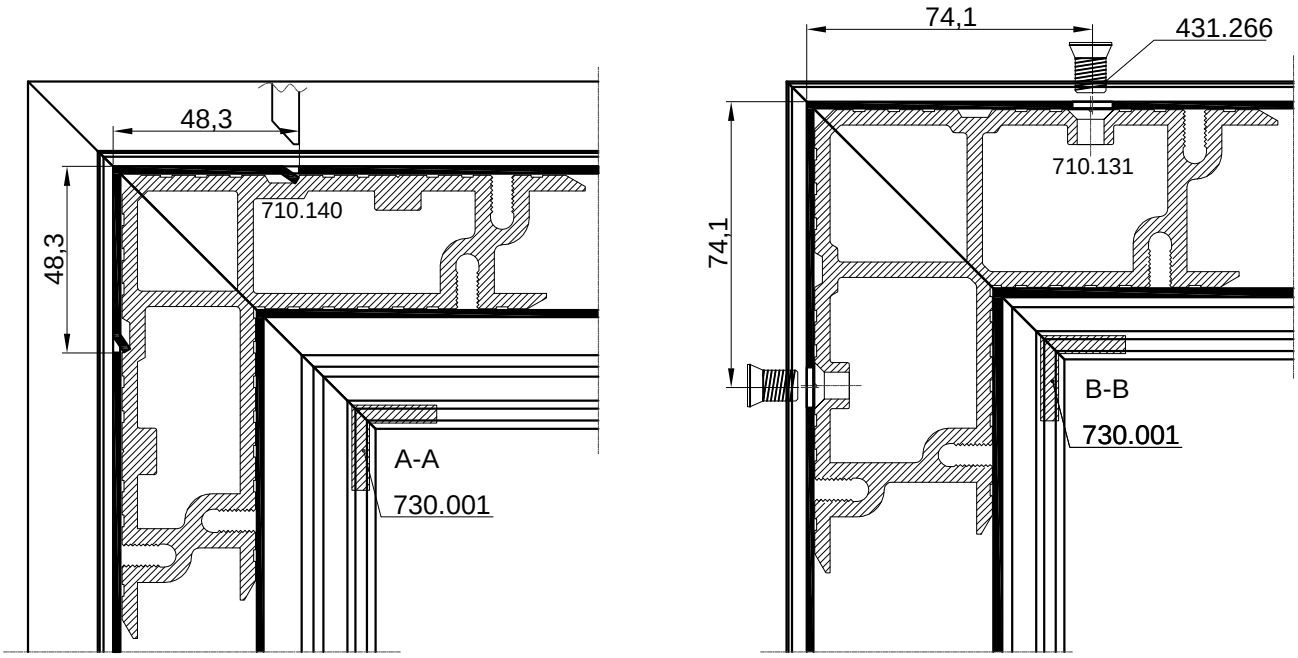


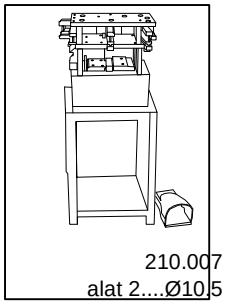


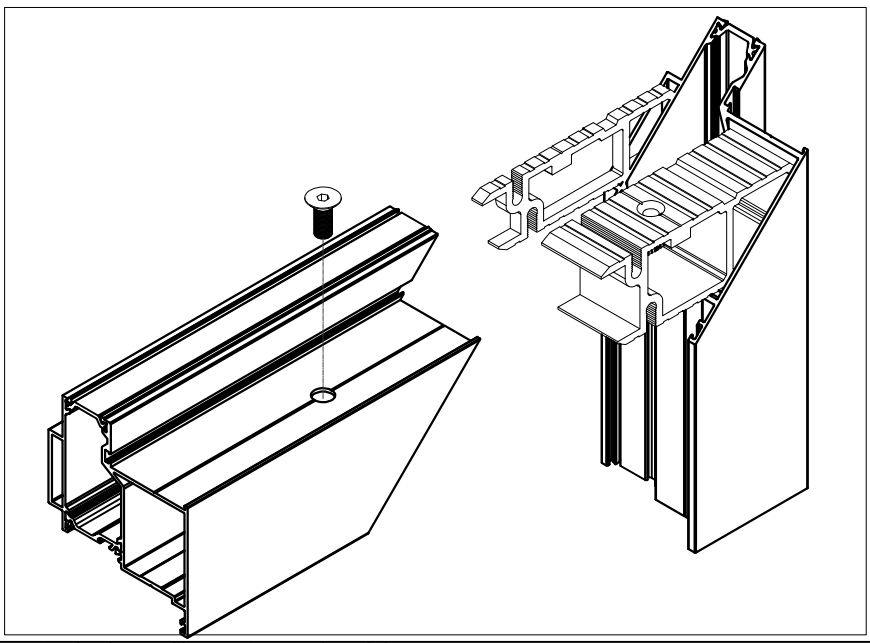


Spajanje profila FT-0553F kutnicima
Connection of profile FT-0553F with corner brackets

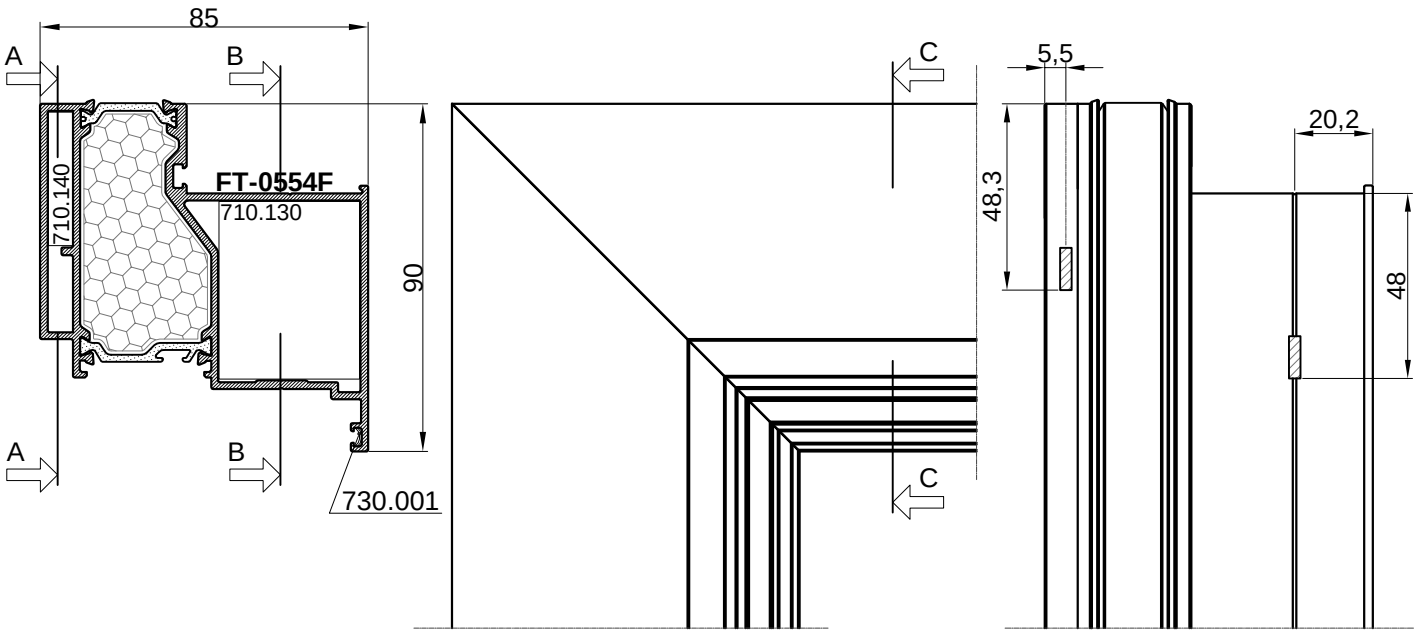


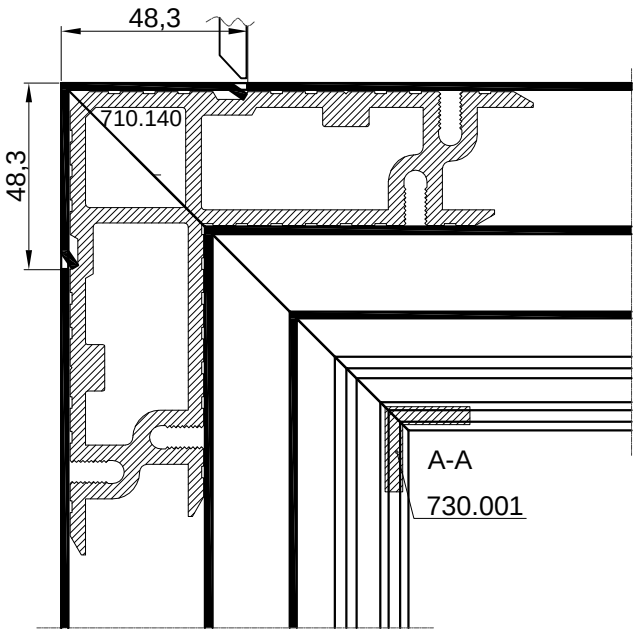


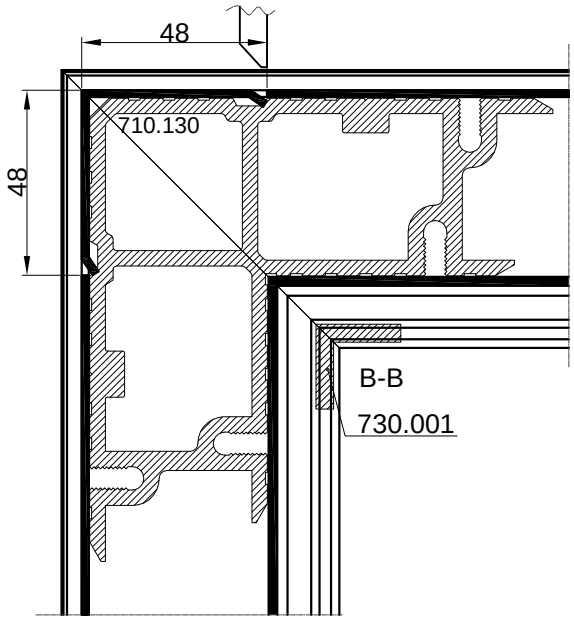


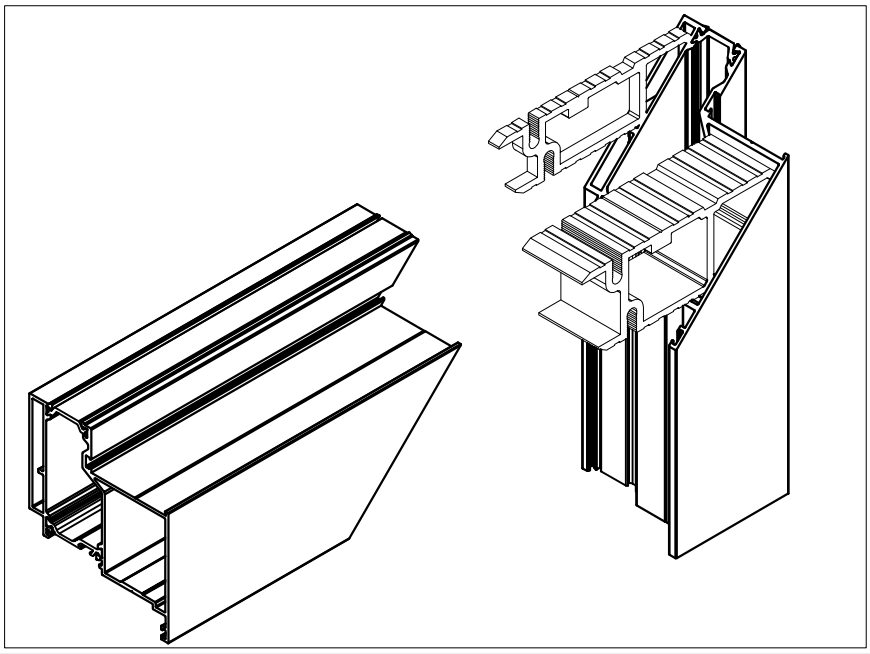


Spajanje profila FT-0553F kutnicima
Connection of profile FT-0553F with corner brackets

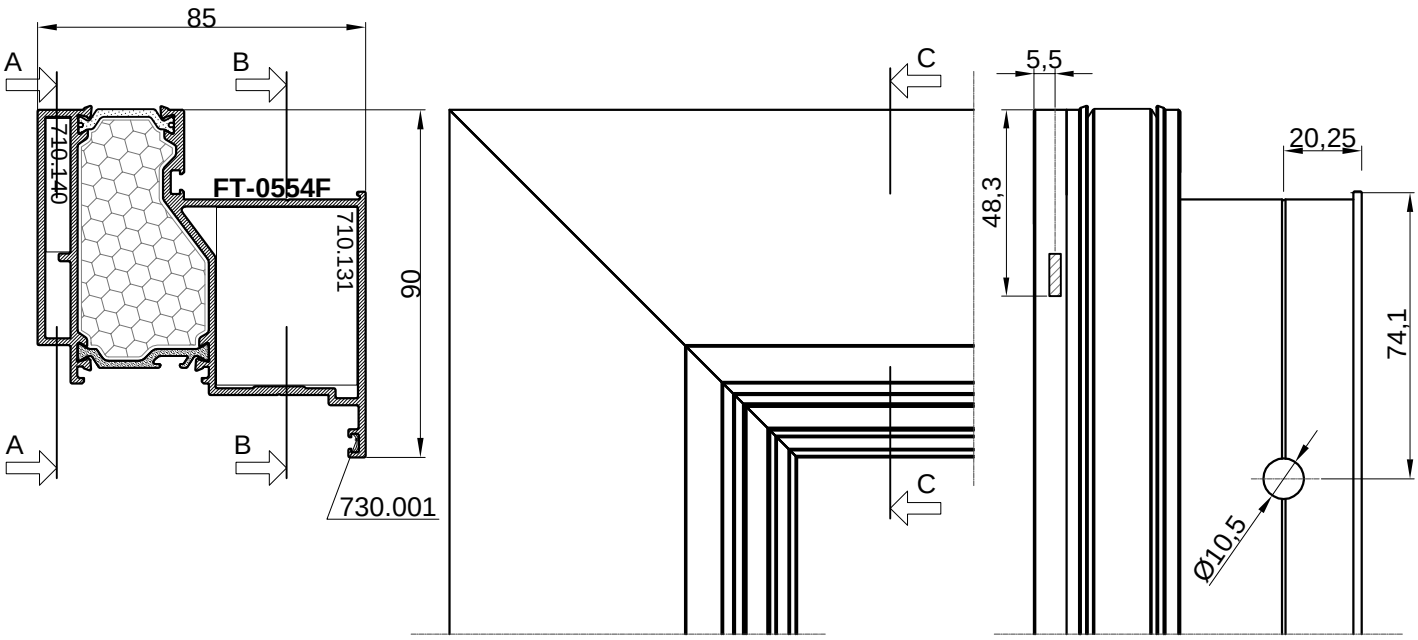


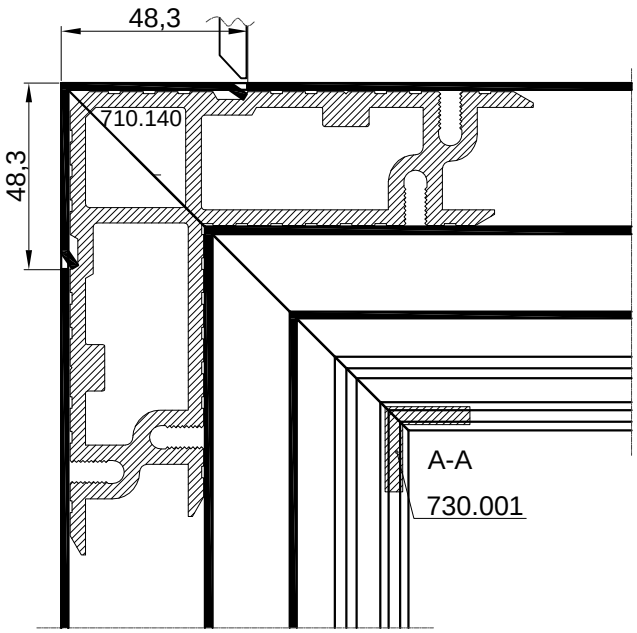


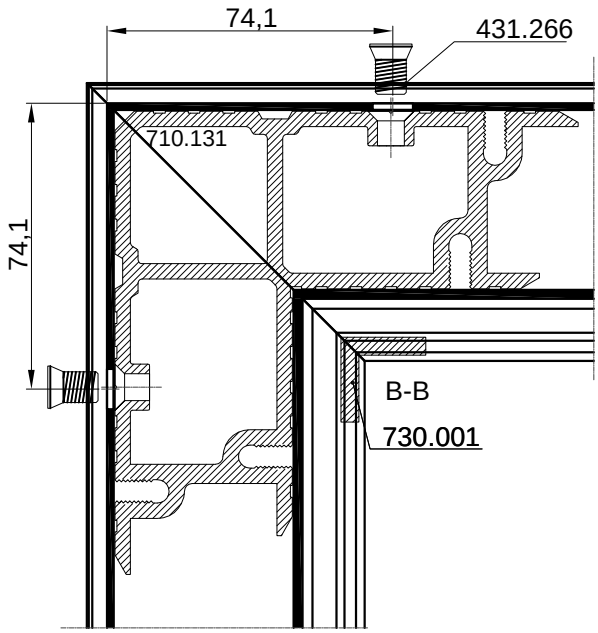


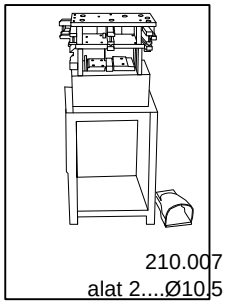


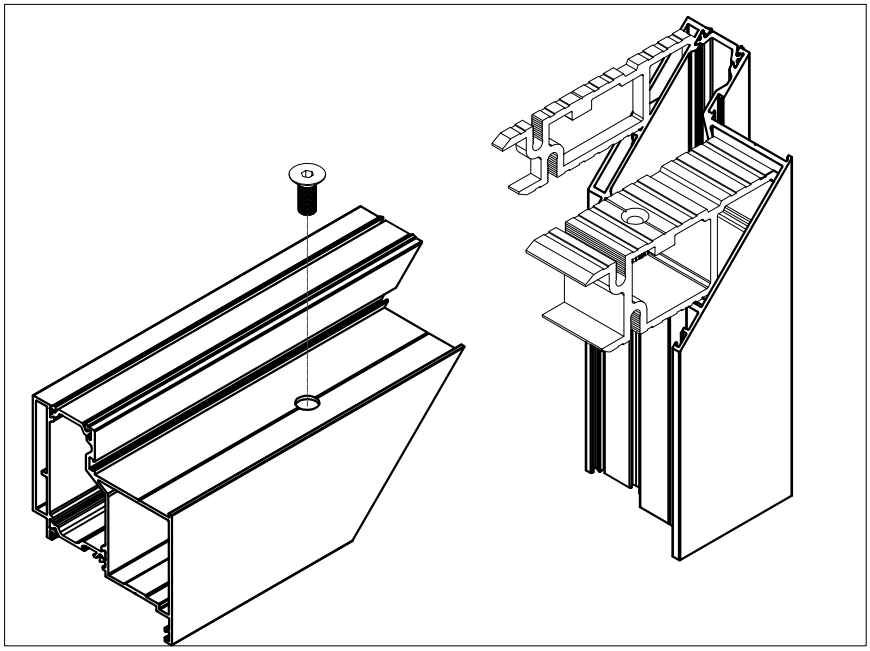
Spajanje profila FT-0554F kutnicima
Connection of profile FT-0554F with corner brackets



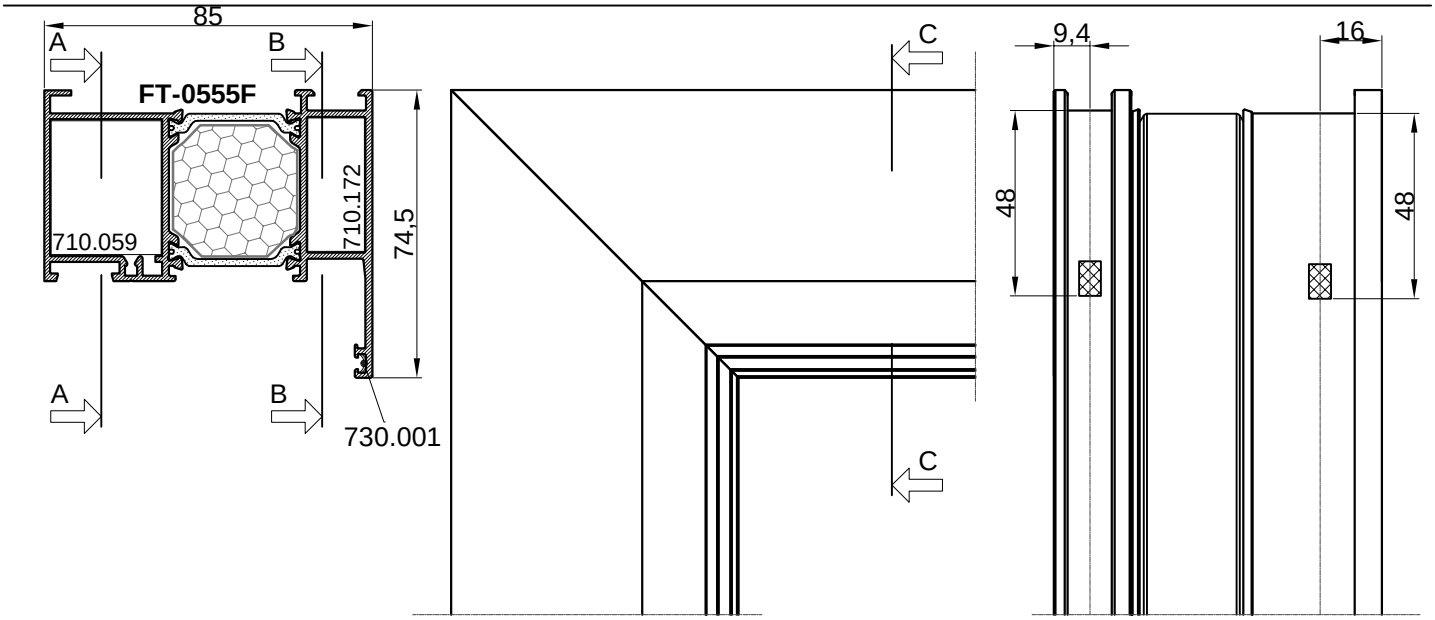


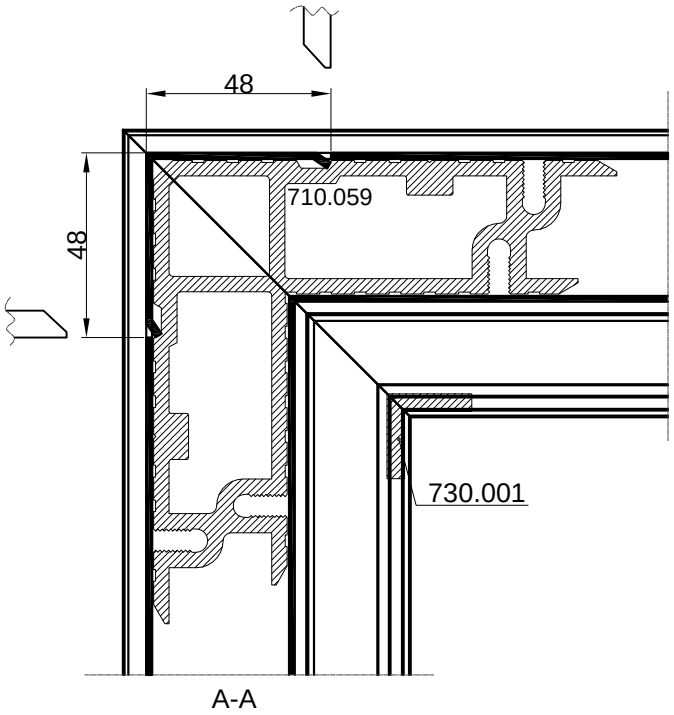




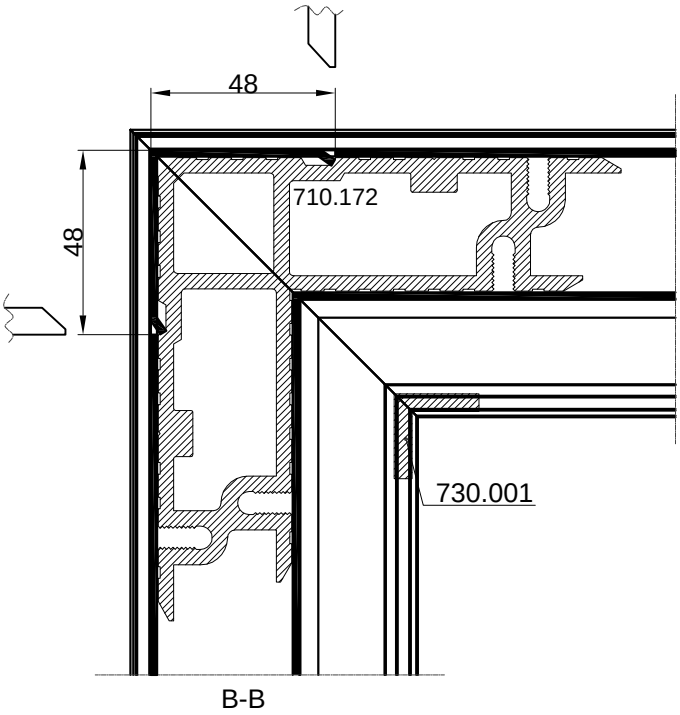


Spajanje profila FT-0554F kutnicima
Connection of profile FT-0554F with corner brackets

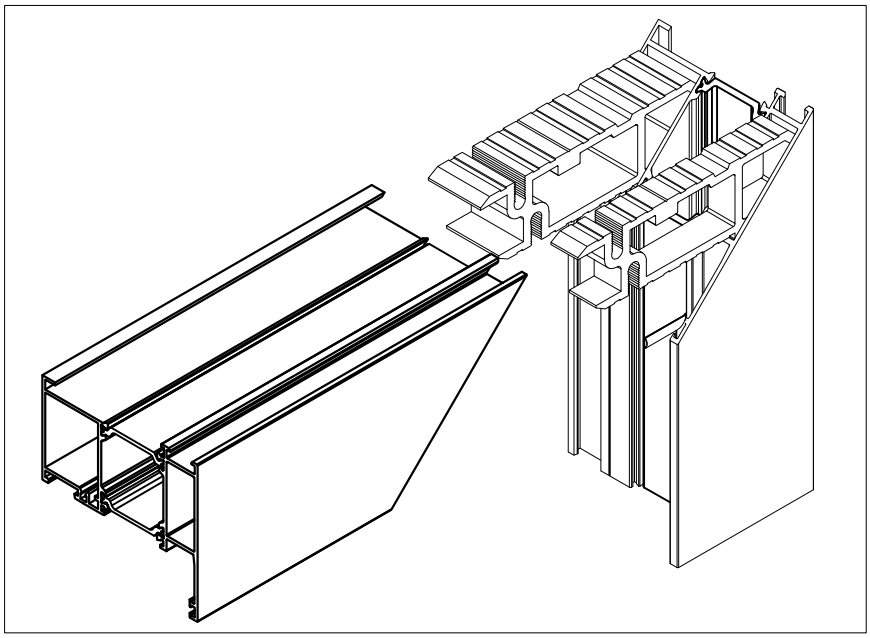




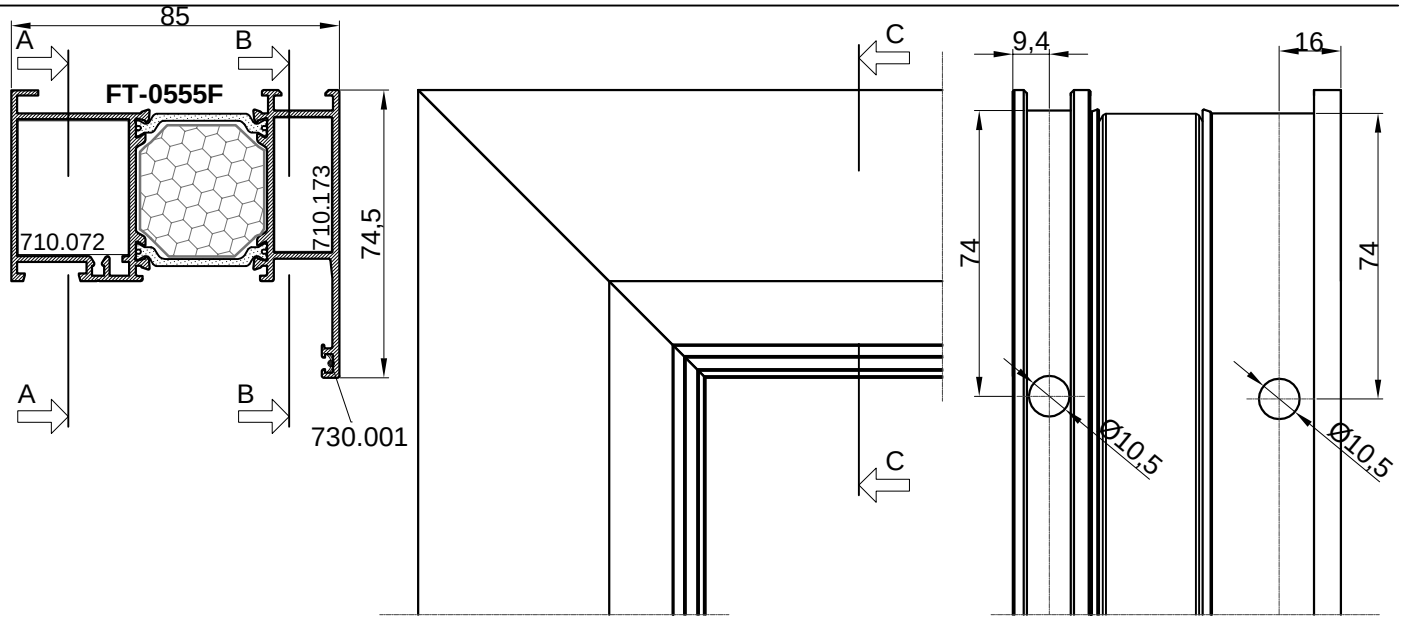
A-A

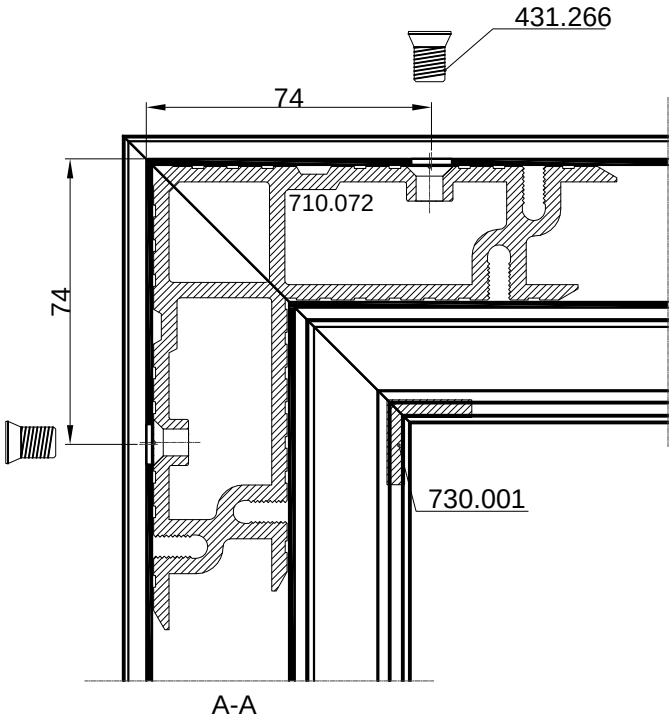


B-B

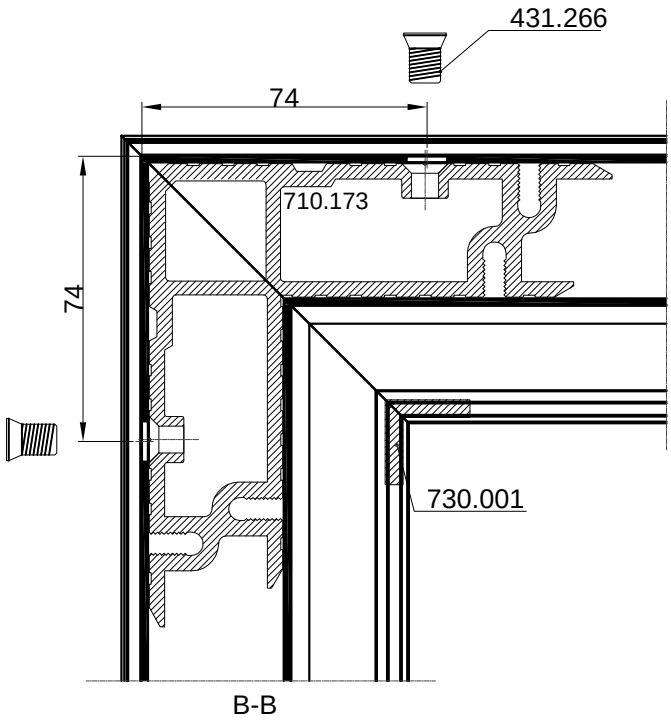


Spajanje profila FT-0555F kutnicima
Connection of profile FT-0555F with corner brackets

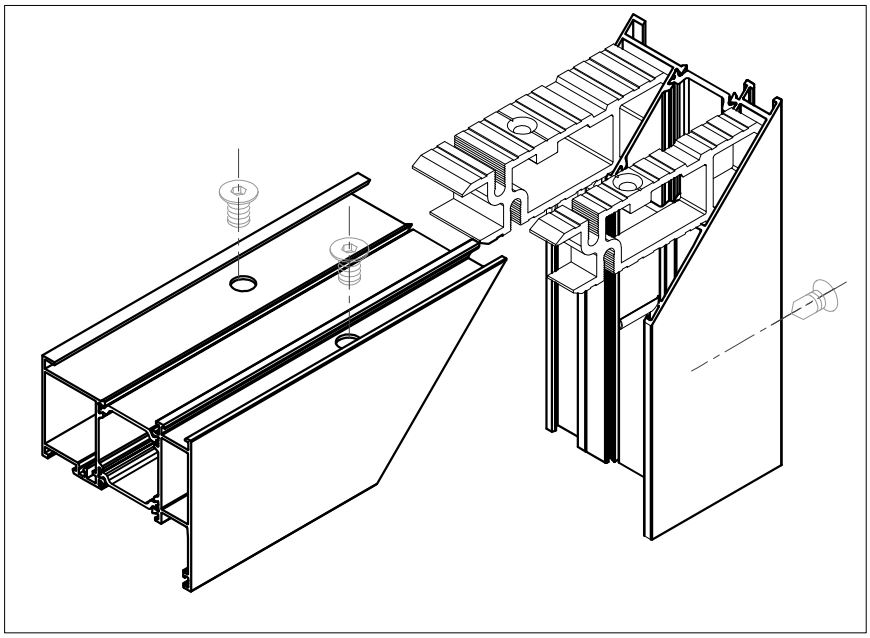


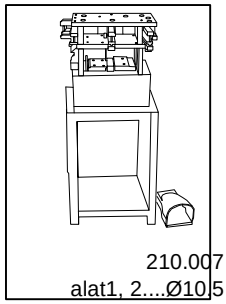


A-A

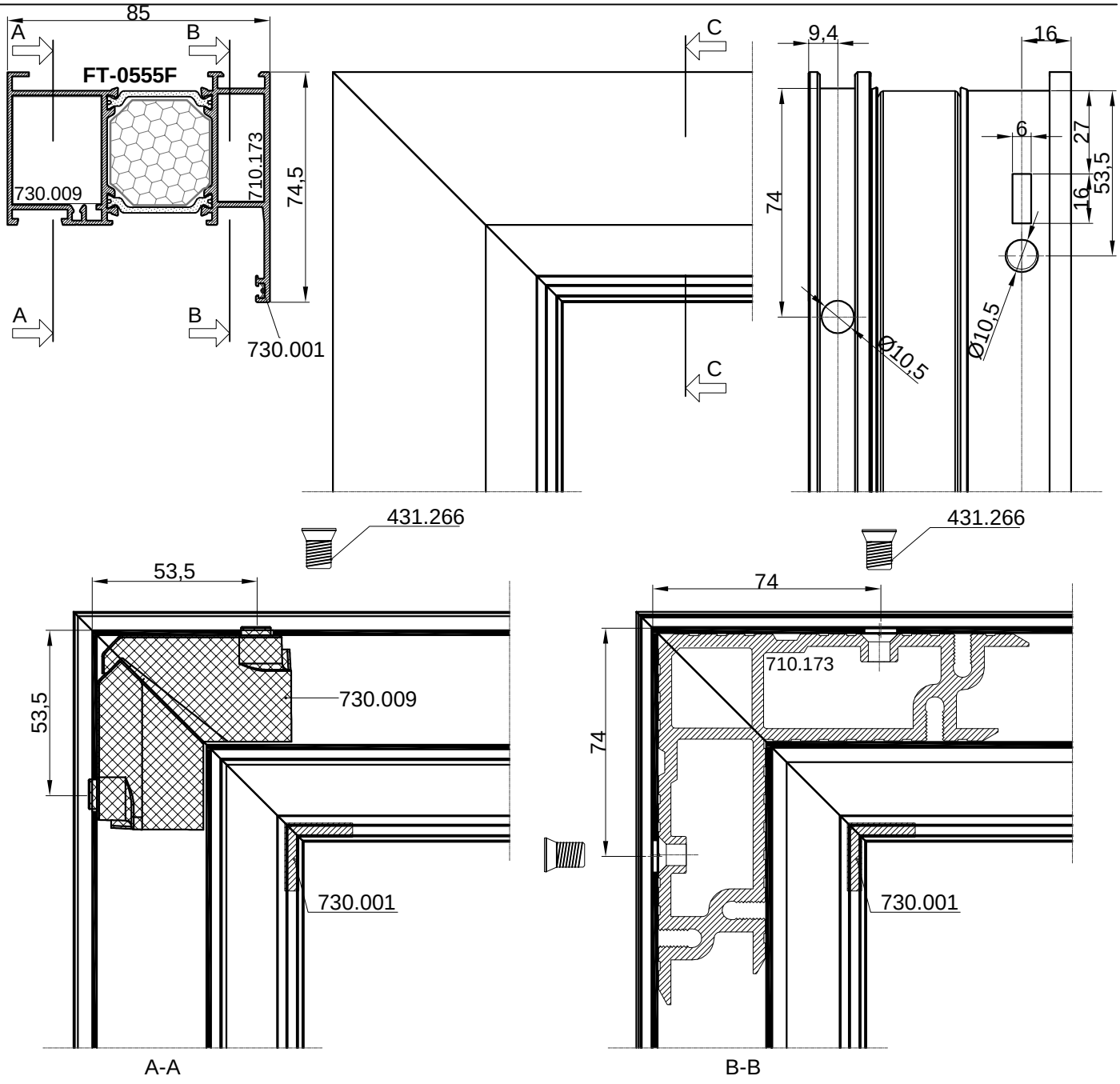


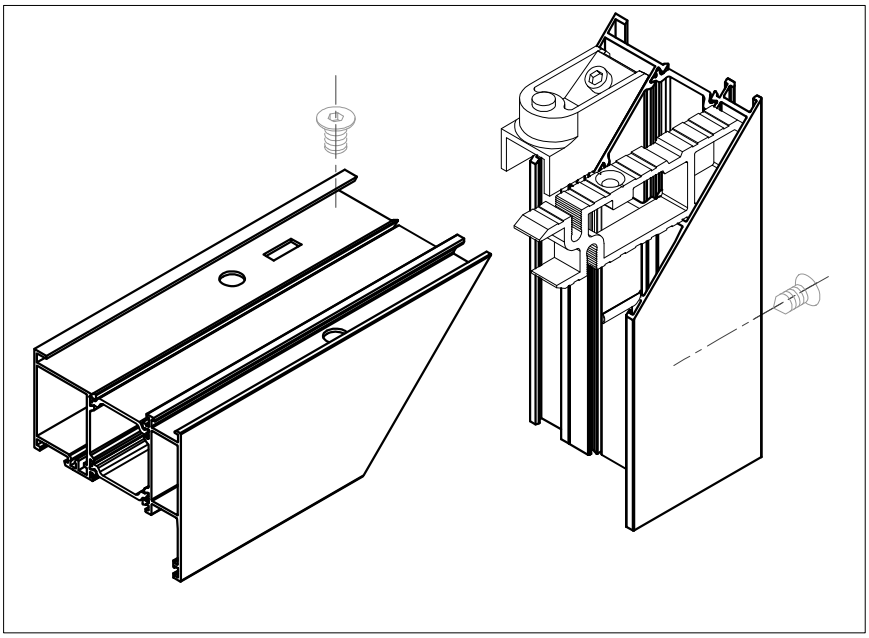
B-B

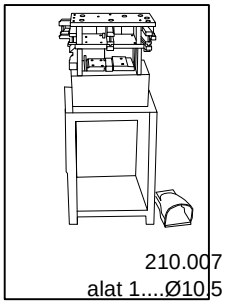


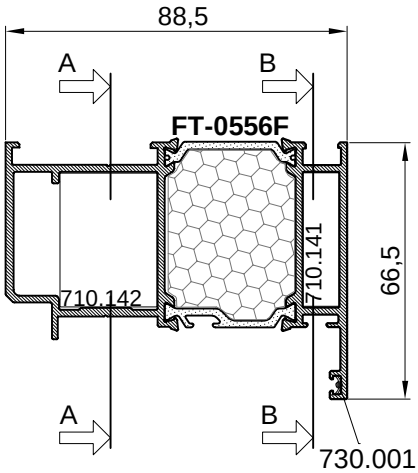


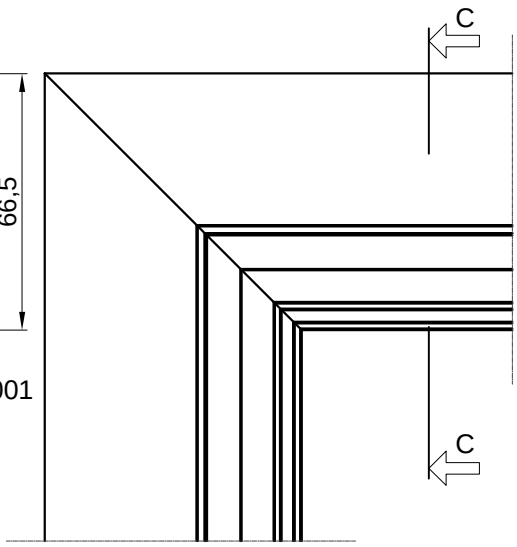
210.007
alat1, 2....Ø10,5

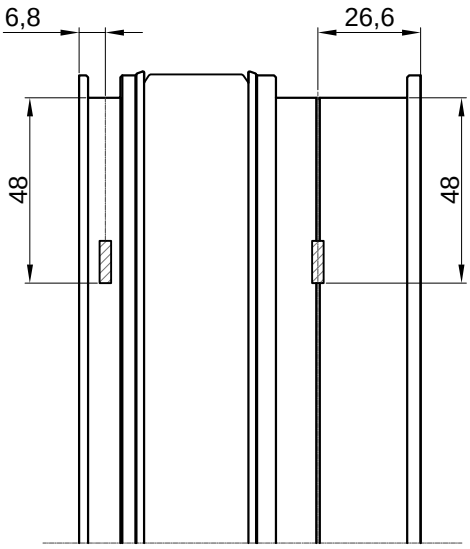

85
A
B
FT-0555F
730.009
710.173
74,5
730.001
C
9,4
16
74
6
27
53,5
16
Ø10,5
Ø10,5
431.266
431.266
53,5
53,5
730.009
730.001
74
710.173
74
730.001
A-A
B-B

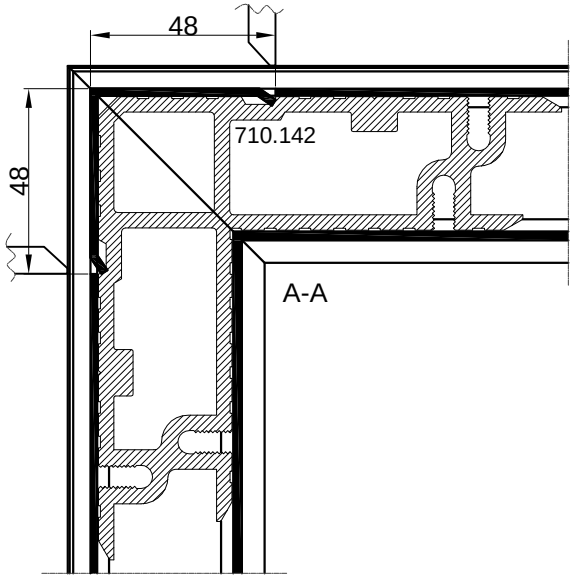


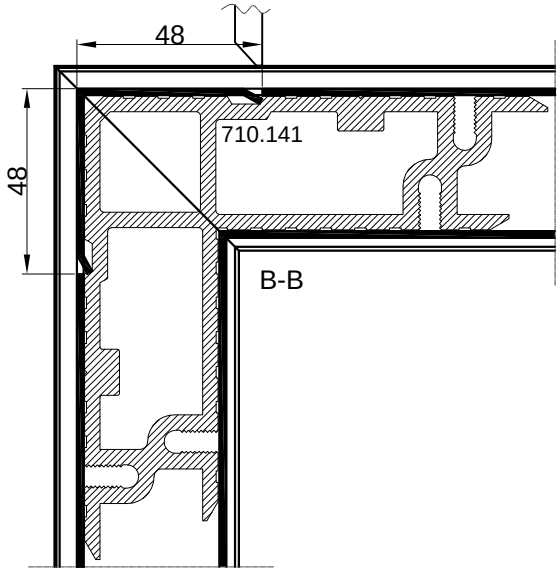

210.007
alat 1....Ø10,5

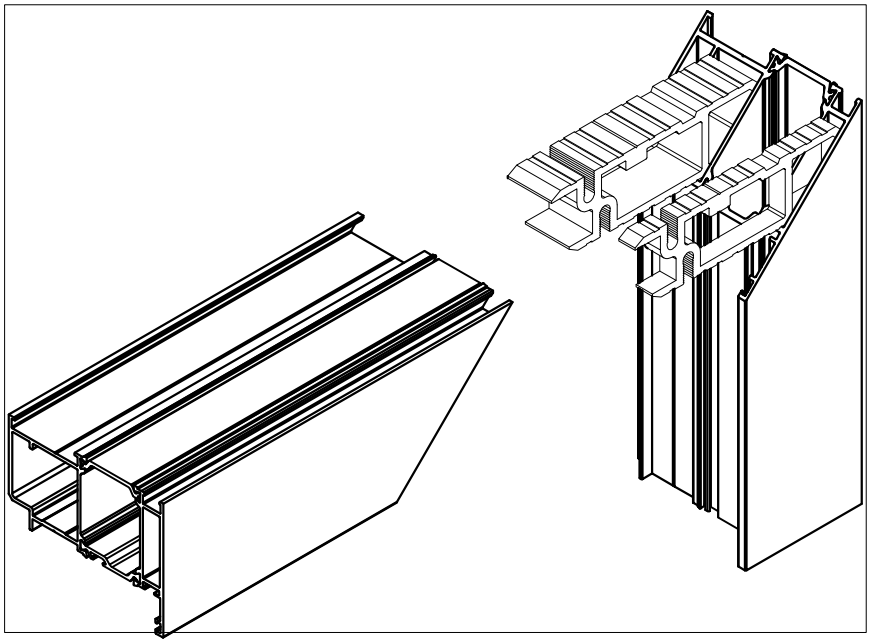

88,5
A
B
FT-0556F
710.141
710.142
66,5
A
B
730.001

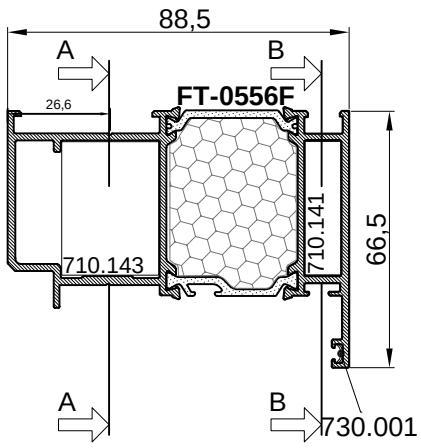

C
C

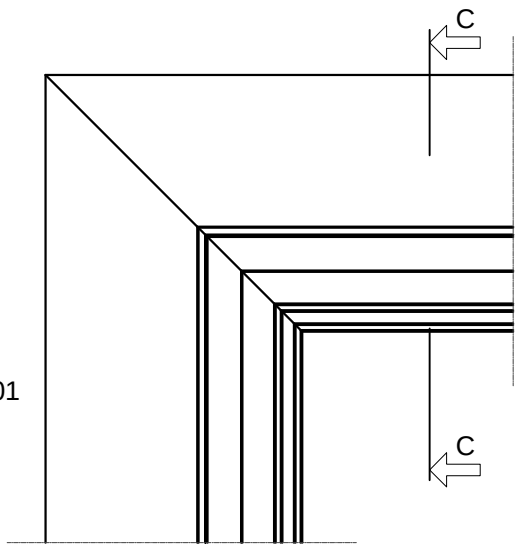

6,8
26,6
48
48

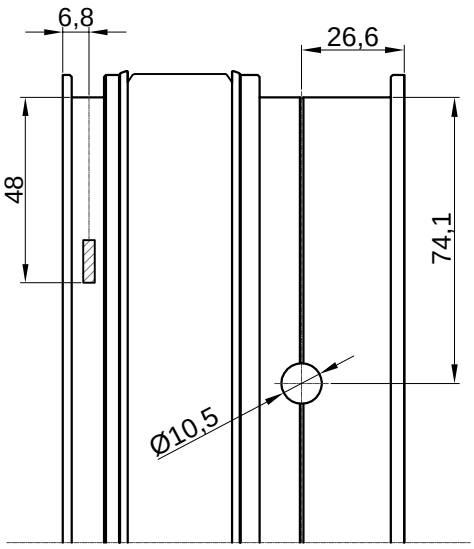

48
48
710.142
A-A

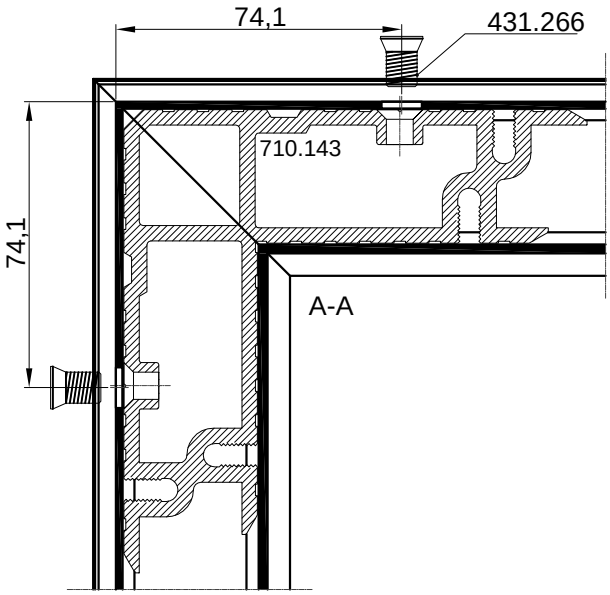

48
48
710.141
B-B

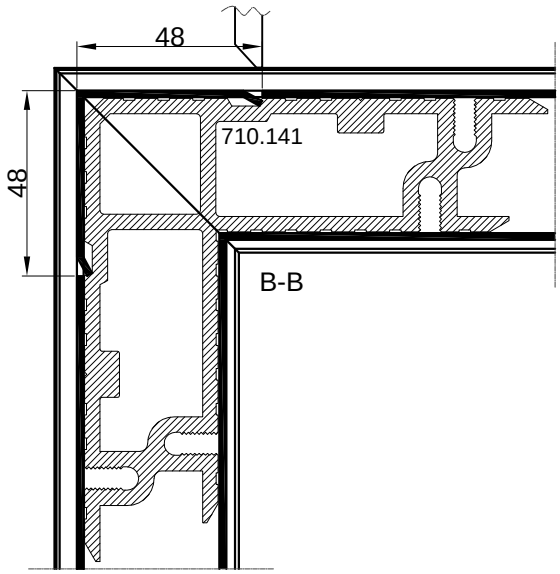


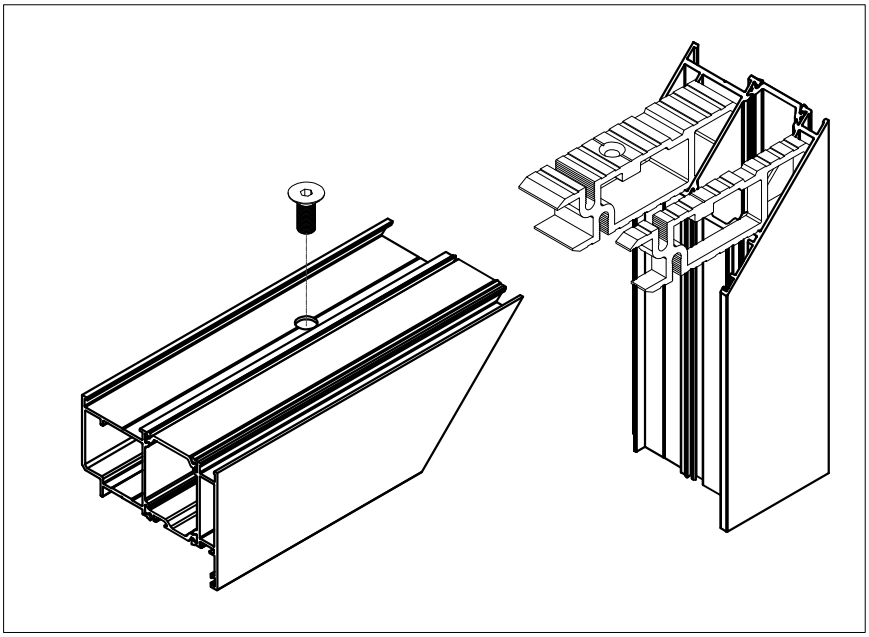

88,5
A
B
26,6
FT-0556F
710.143
710.141
66,5
A
B
730.001

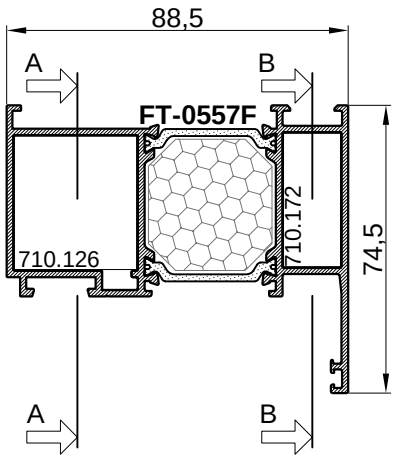

C
C

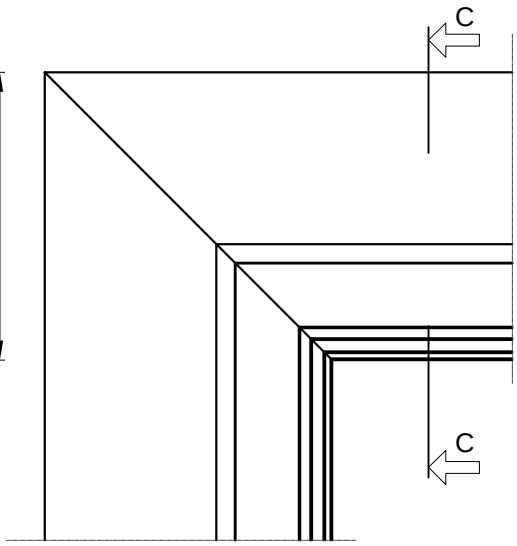

6,8
26,6
48
74,1
Ø10,5

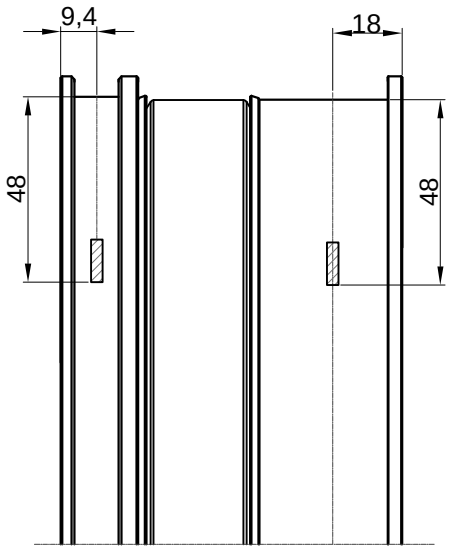

74,1
431.266
710.143
74,1
A-A

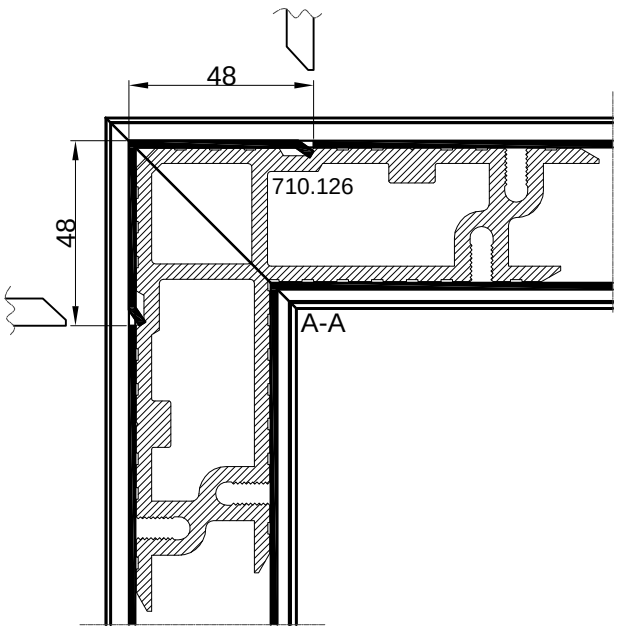

48
710.141
48
B-B

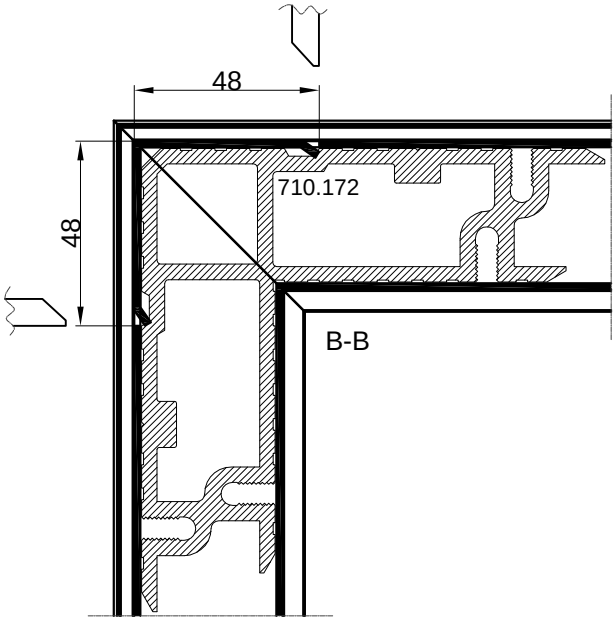


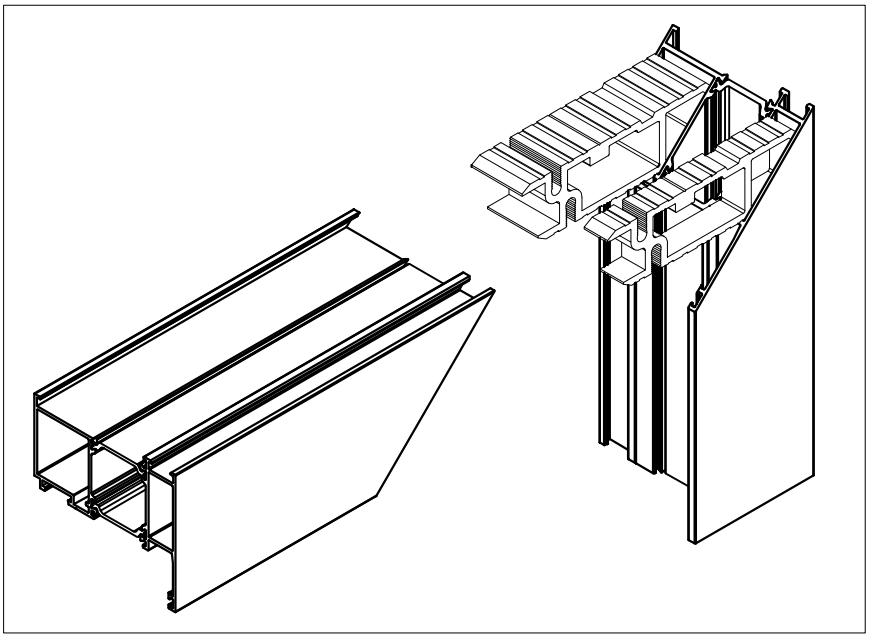




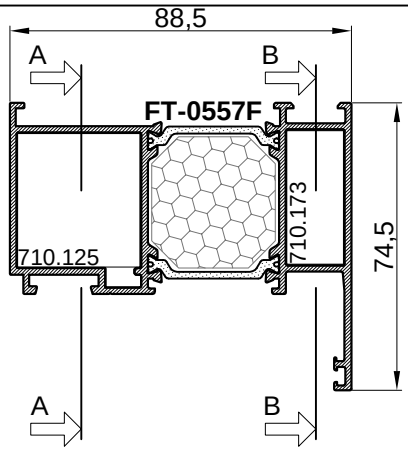


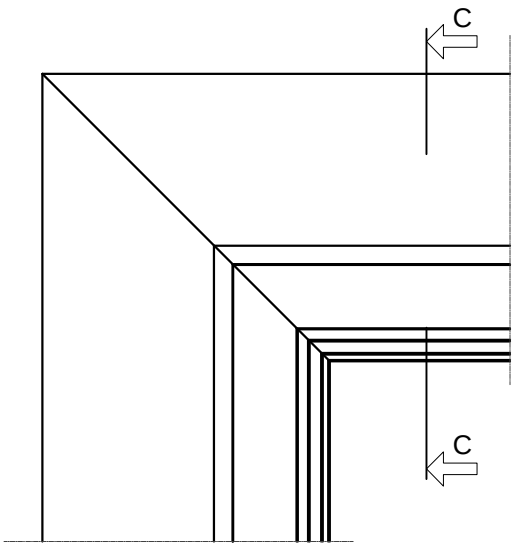


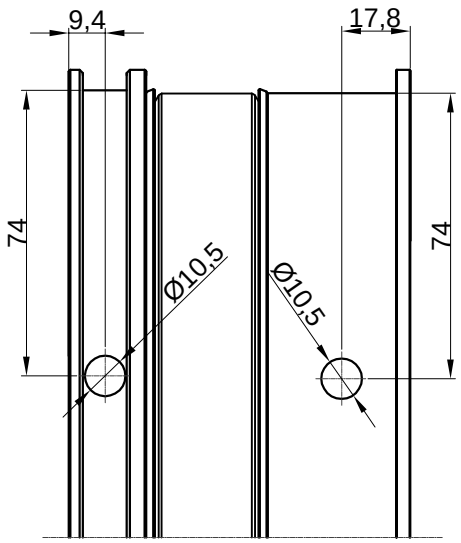


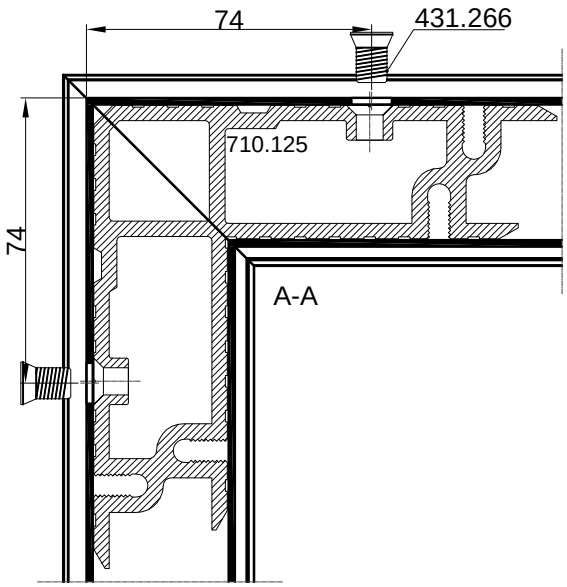


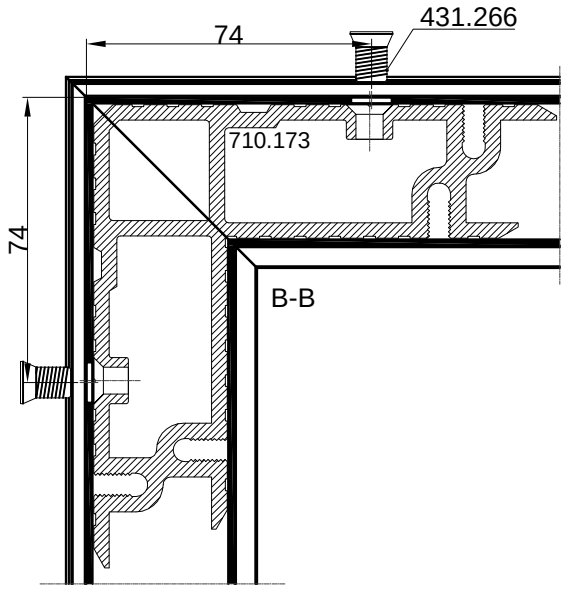
Spajanje profila FT-0557F kutnicima
Connection of profile FT-0557F with corner brackets

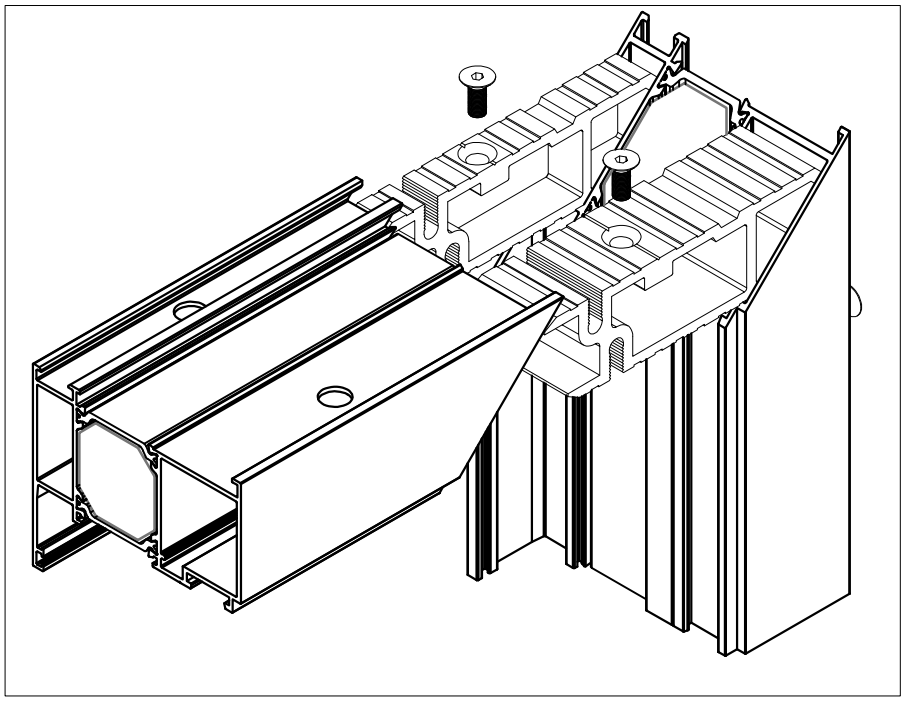

88,5
A
B
FT-0557F
710.173
710.125
74,5
A
B

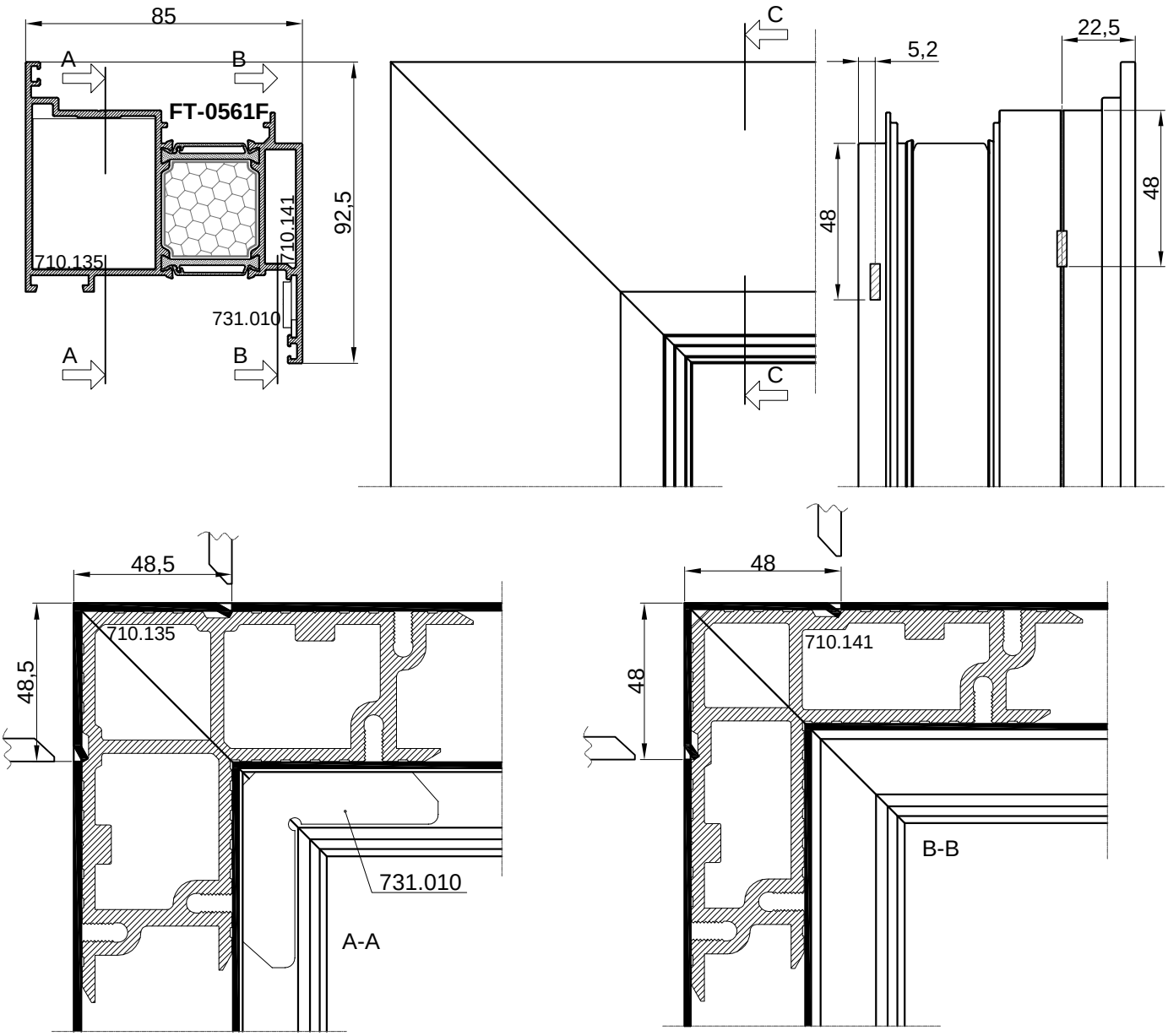

C
C

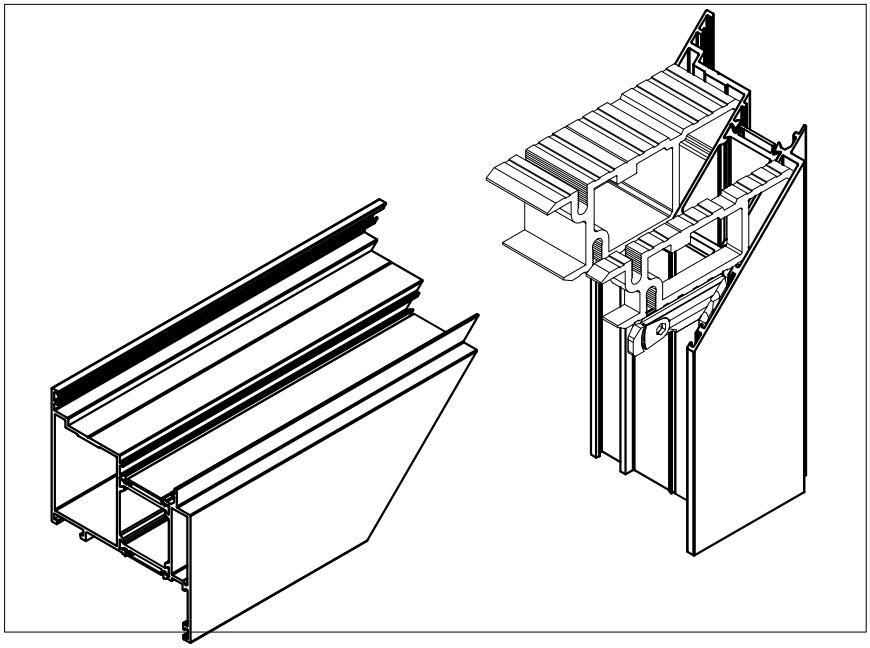

9,4
17,8
74
Ø10,5
Ø10,5
74

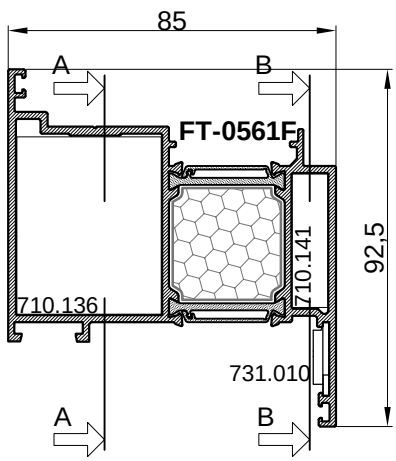

74
431.266
710.125
74
A-A

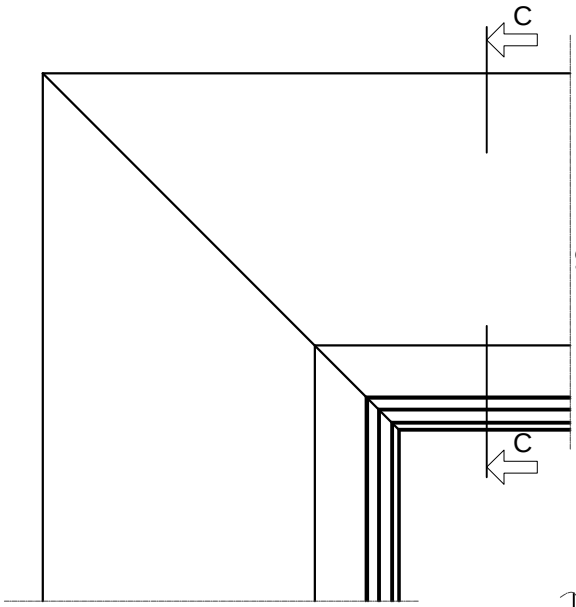

74
431.266
710.173
74
B-B

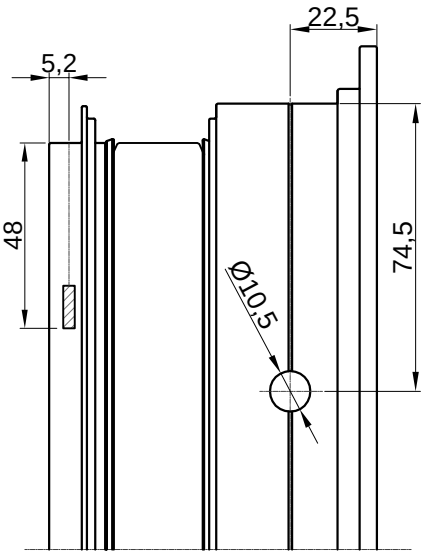


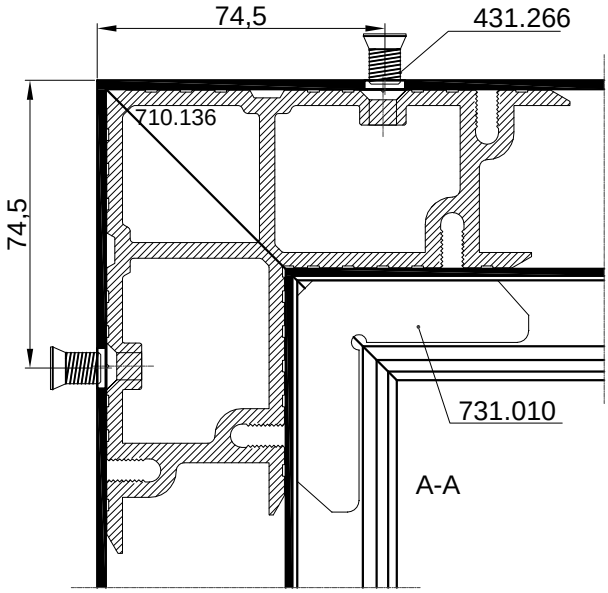

85
A
B
FT-0561F
92,5
710.135
710.141
731.010
A
B
C
C
5,2
22,5
48
48
48,5
710.135
48,5
731.010
A-A
48
710.141
48
B-B

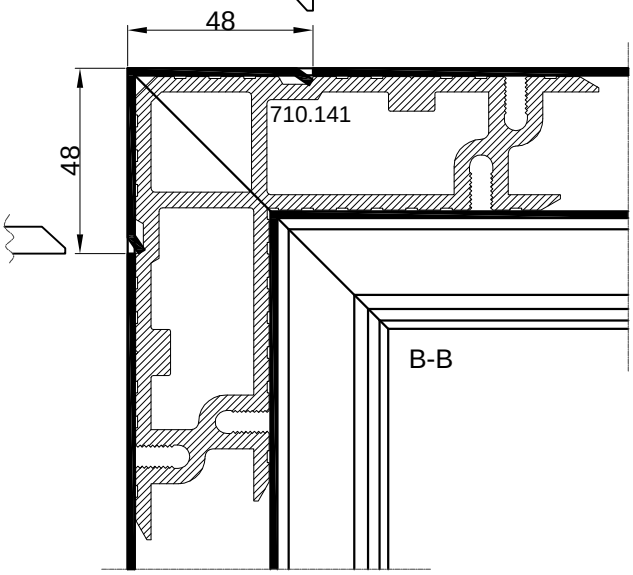


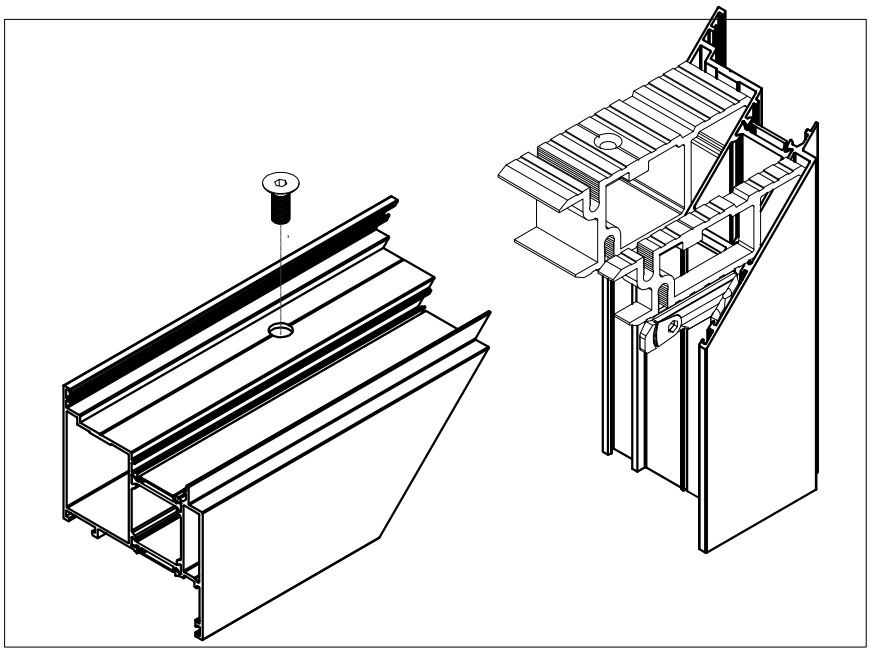




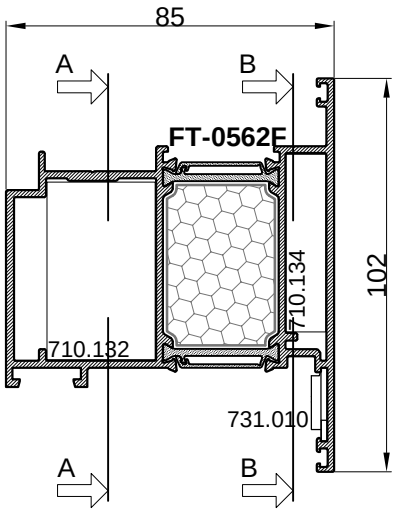


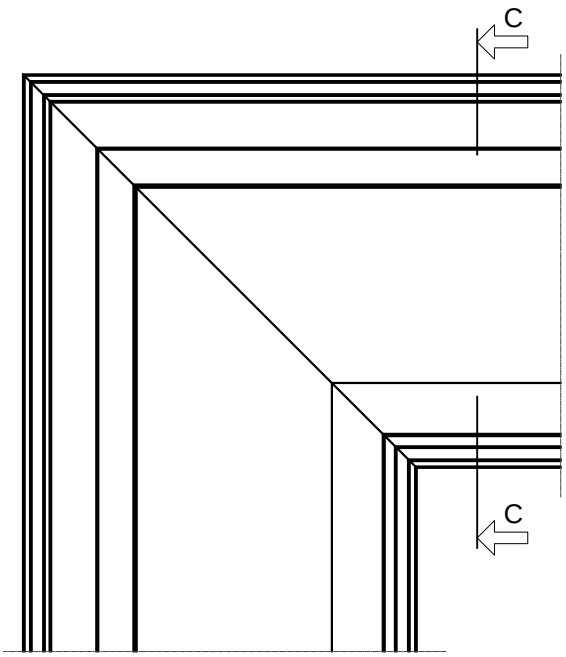


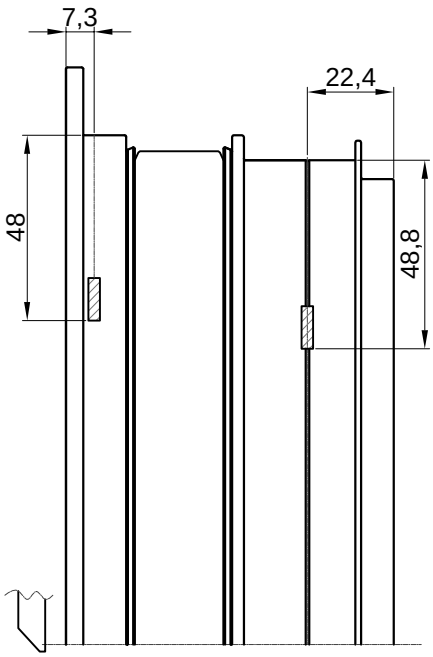


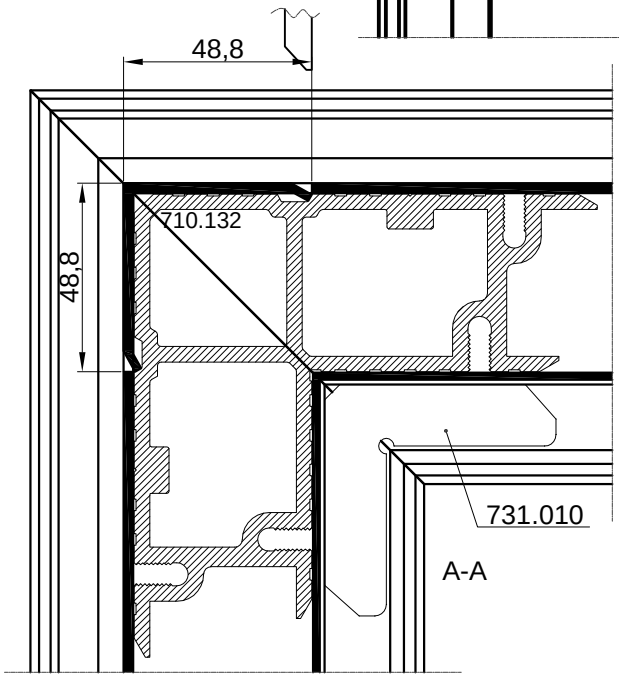


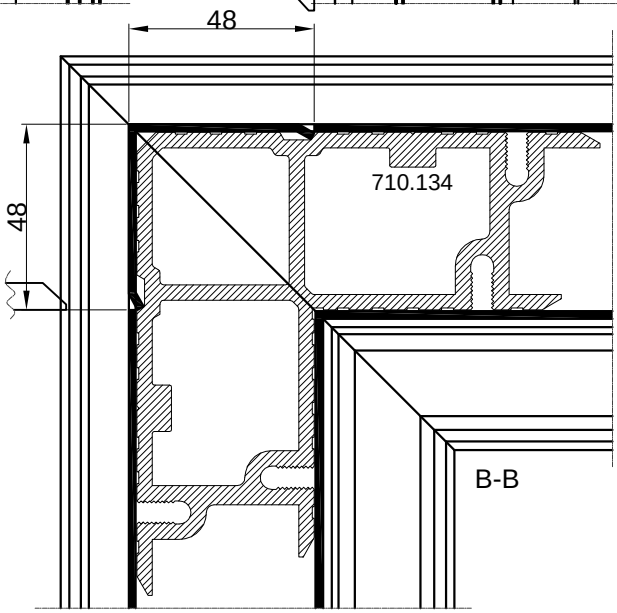
Spajanje profila FT-0561F kutnicima
Connection of profile FT-0561F with corner brackets

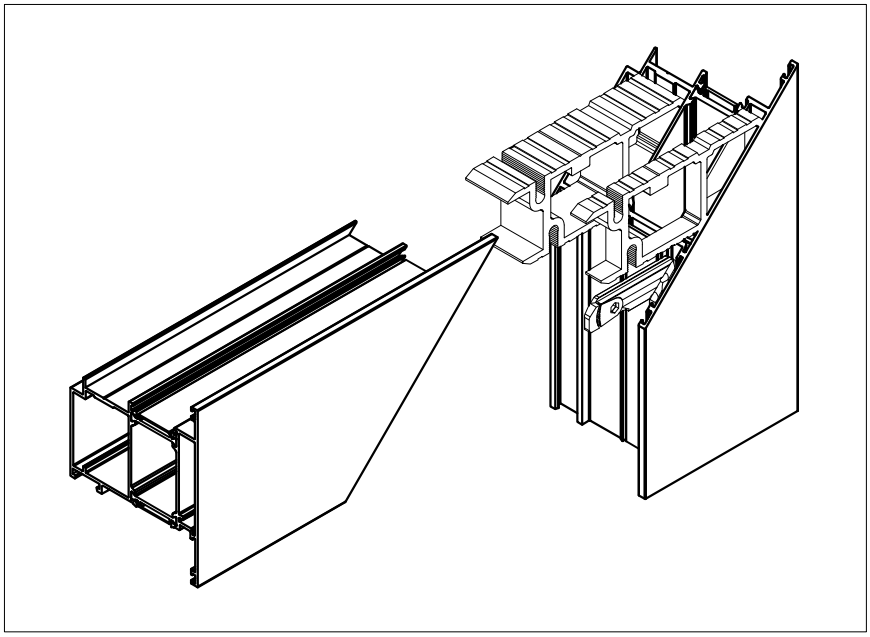

85
A
B
FT-0562F
710.134
102
710.132
731.010
A
B

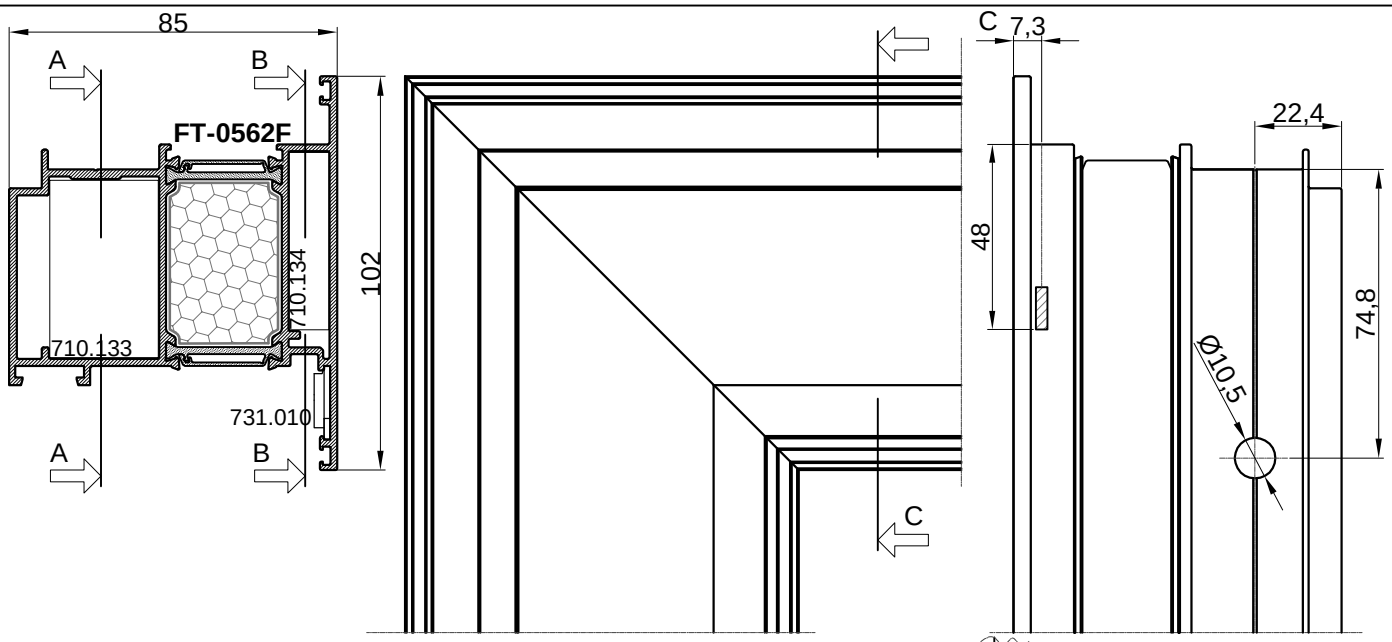

C
C

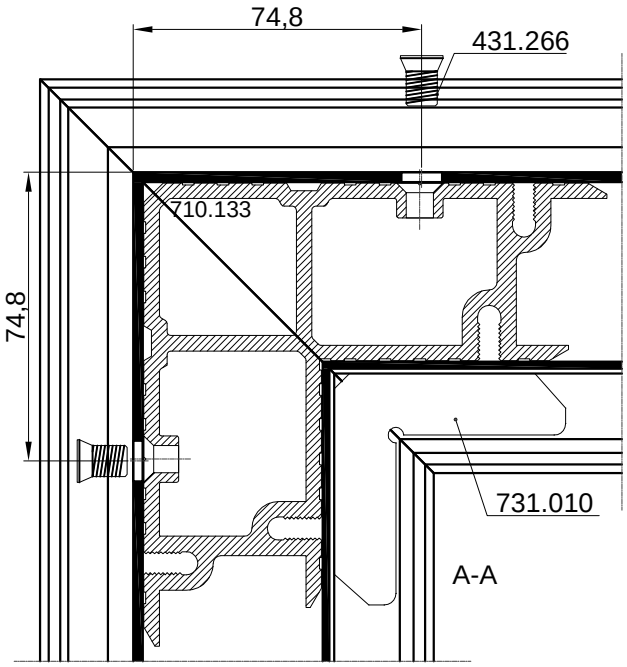

7,3
22,4
48
48,8

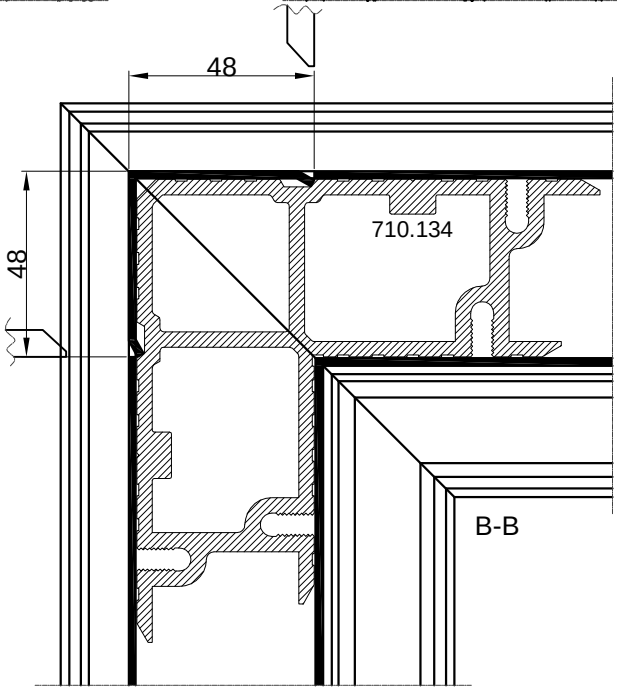

48,8
48,8
710.132
731.010
A-A

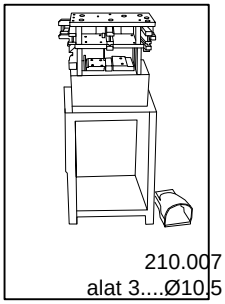

48
48
710.134
B-B

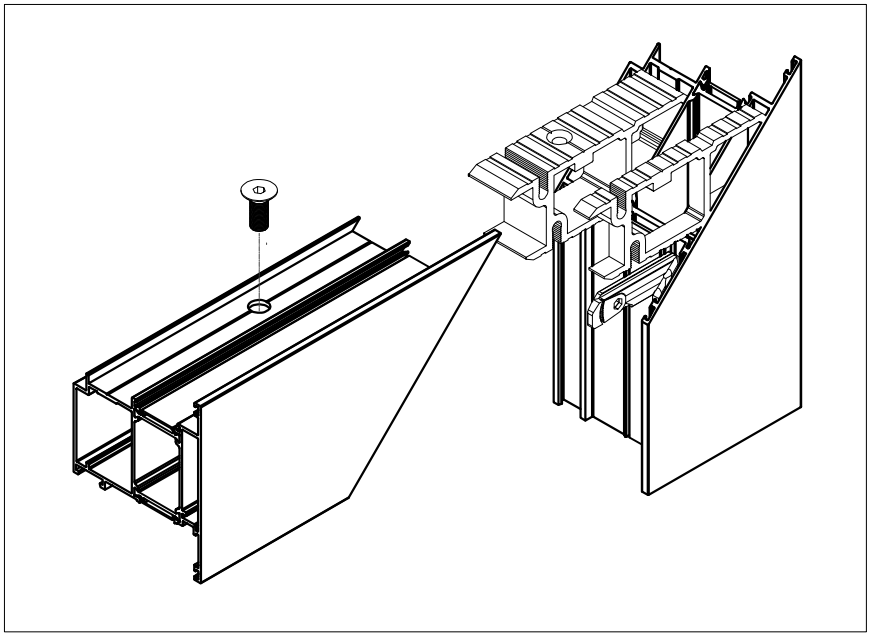


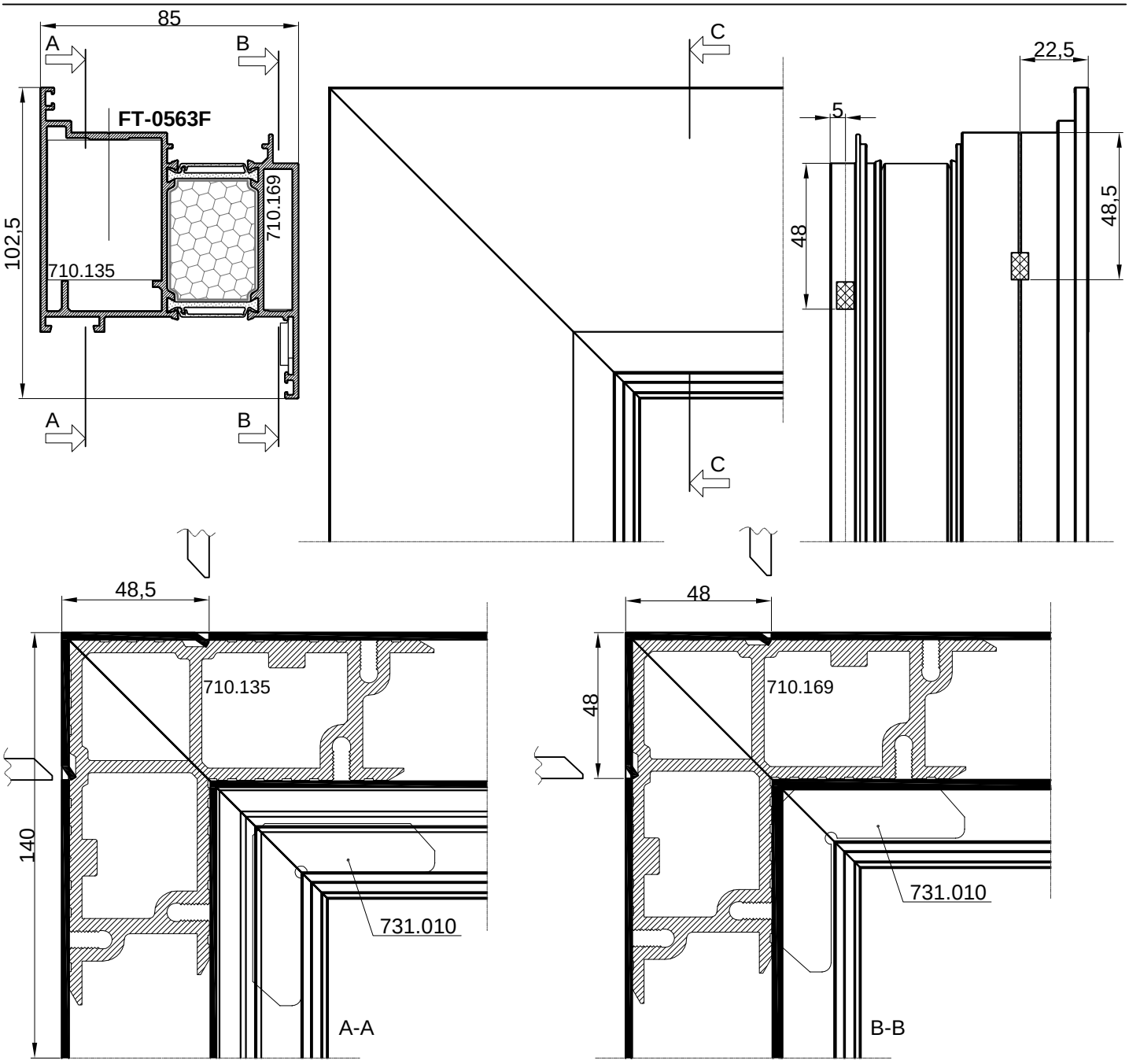

85
A
B
FT-0562F
102
710.134
710.133
731.010
A
B
C
7,3
22,4
48
74,8
Ø10,5
C

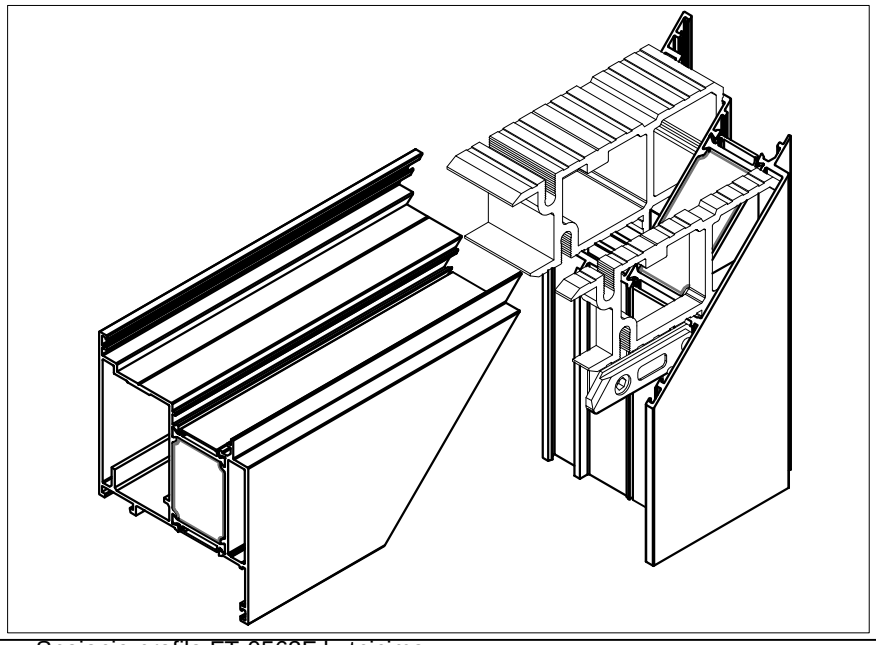

74,8
431.266
710.133
74,8
731.010
A-A


48
710.134
48
B-B

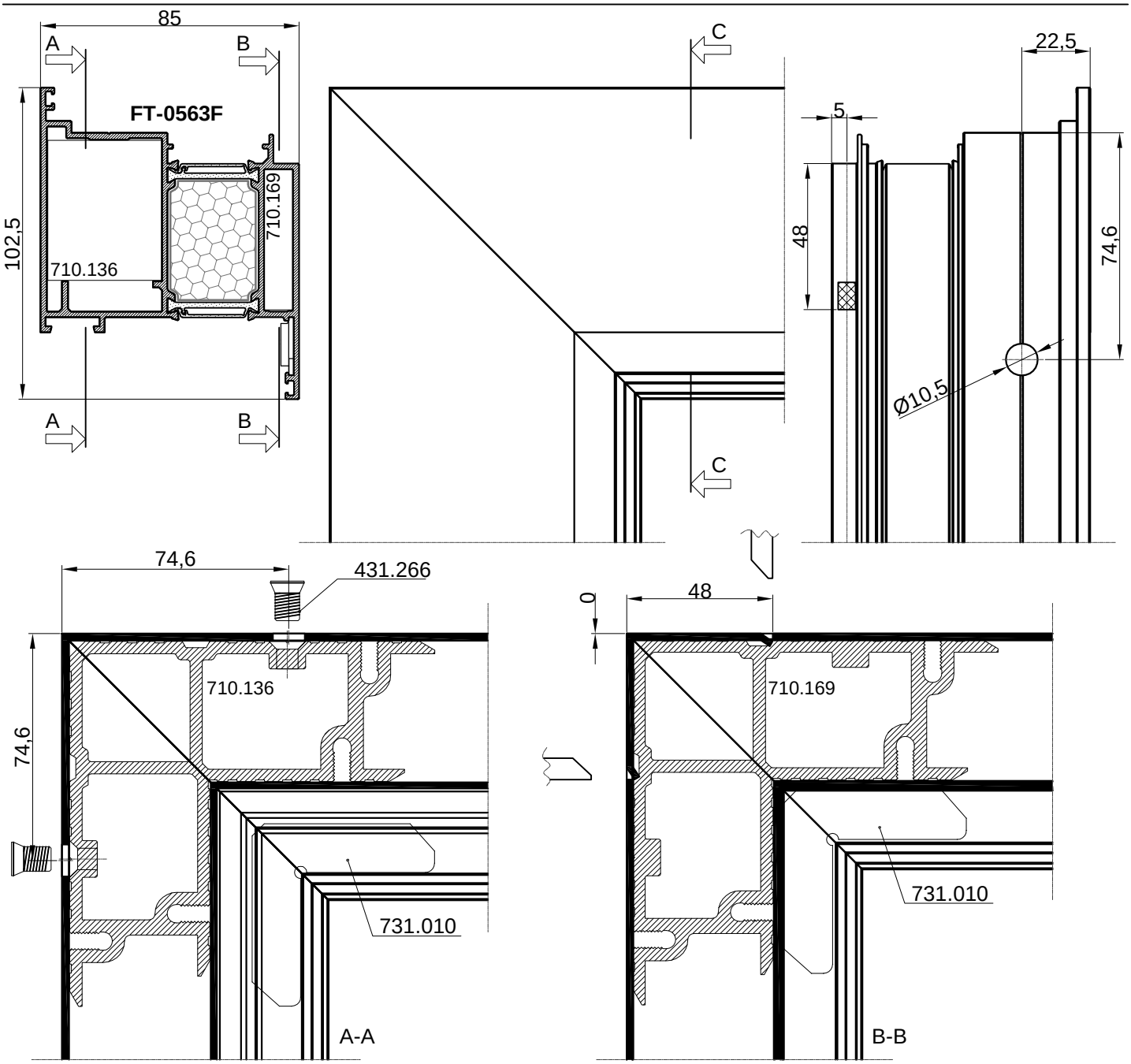

210.007
alat 3....Ø10,5

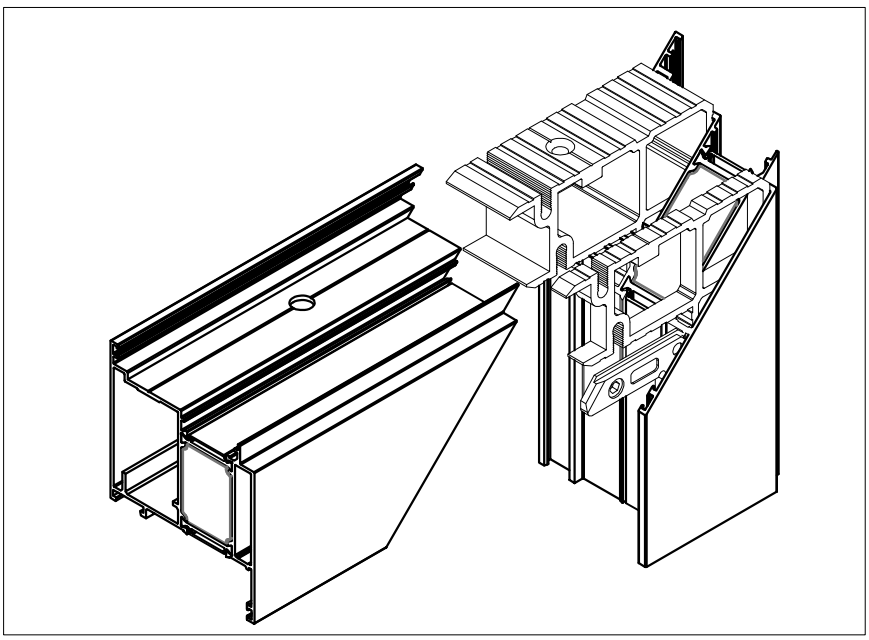


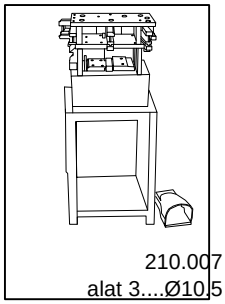




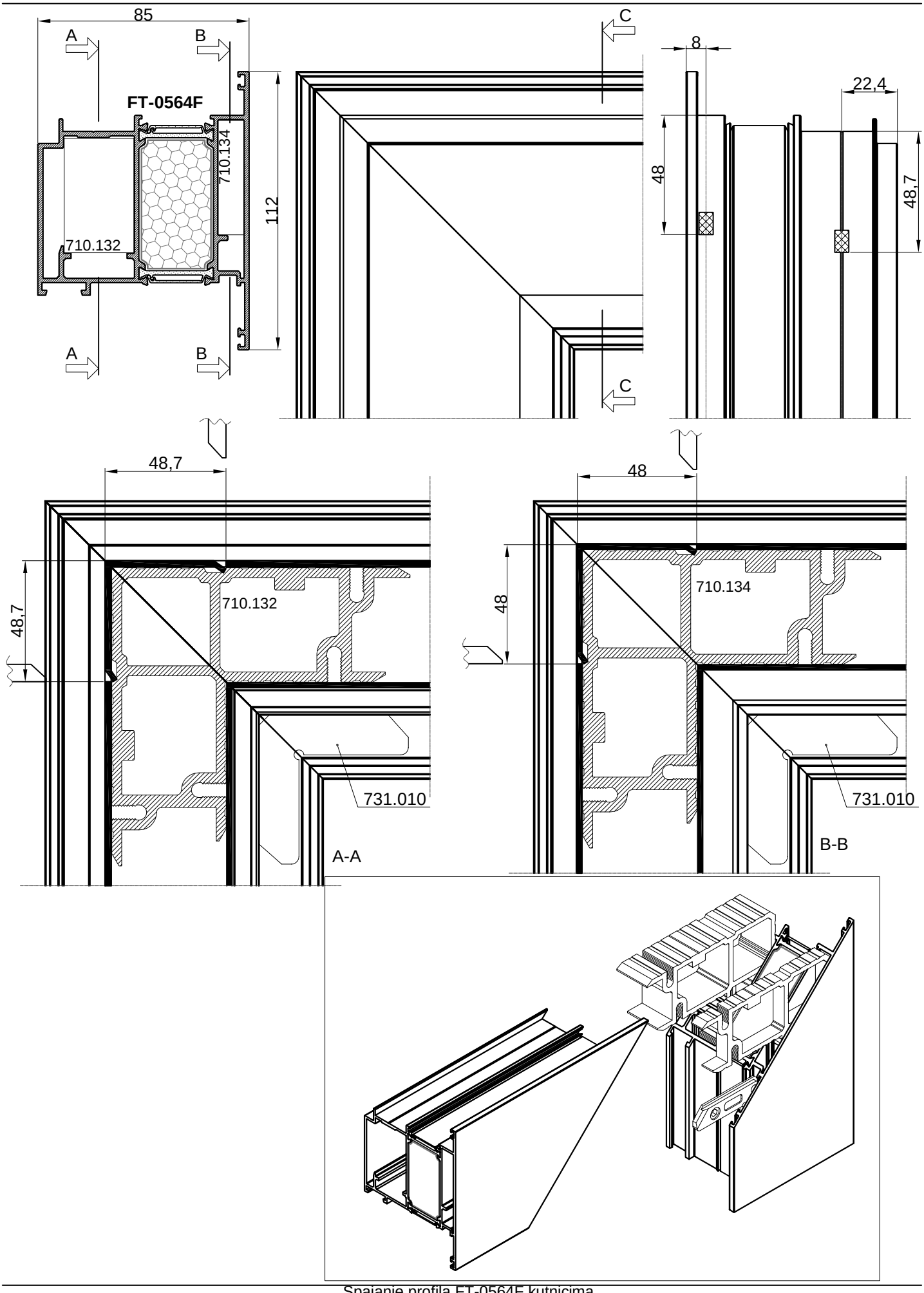
Spajanje profila FT-0563F kutnicima
Connection of profile FT-0563F with corner brackets

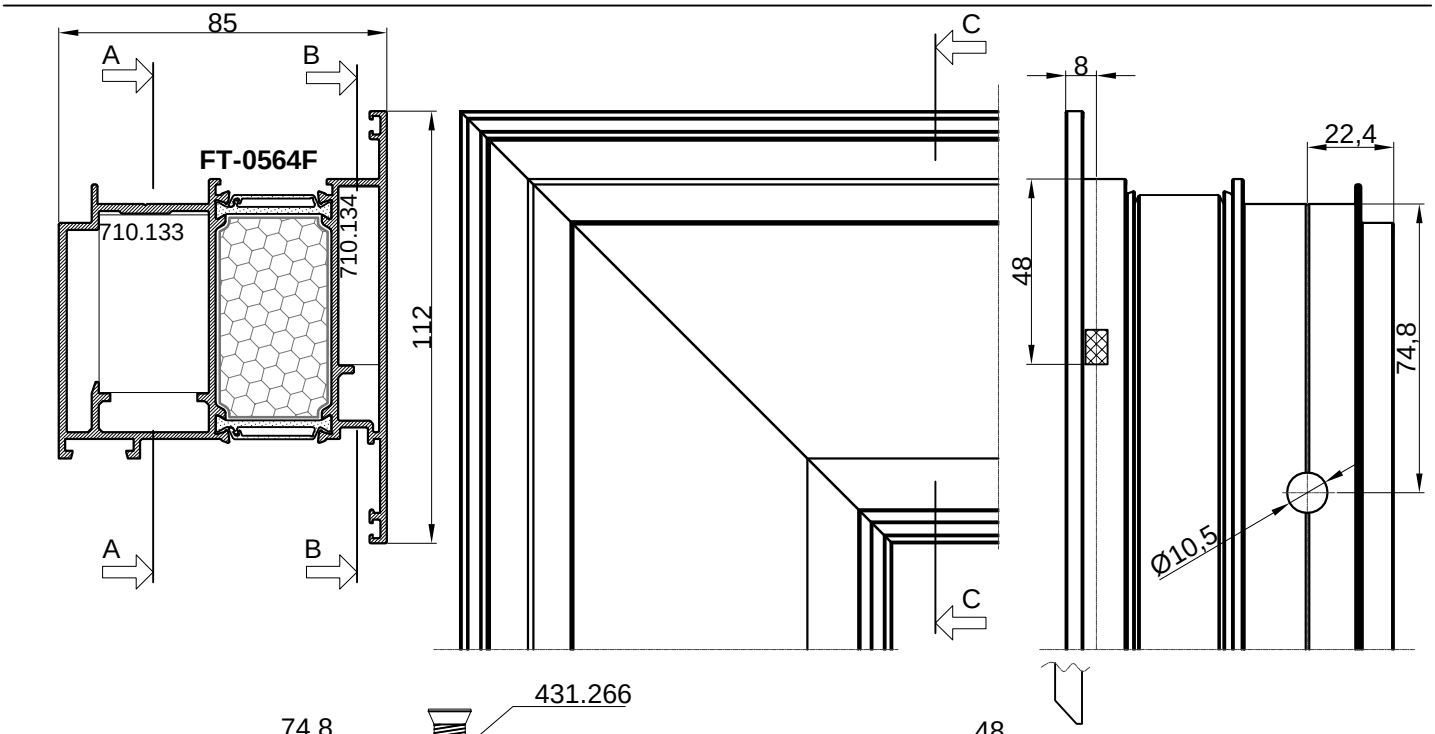


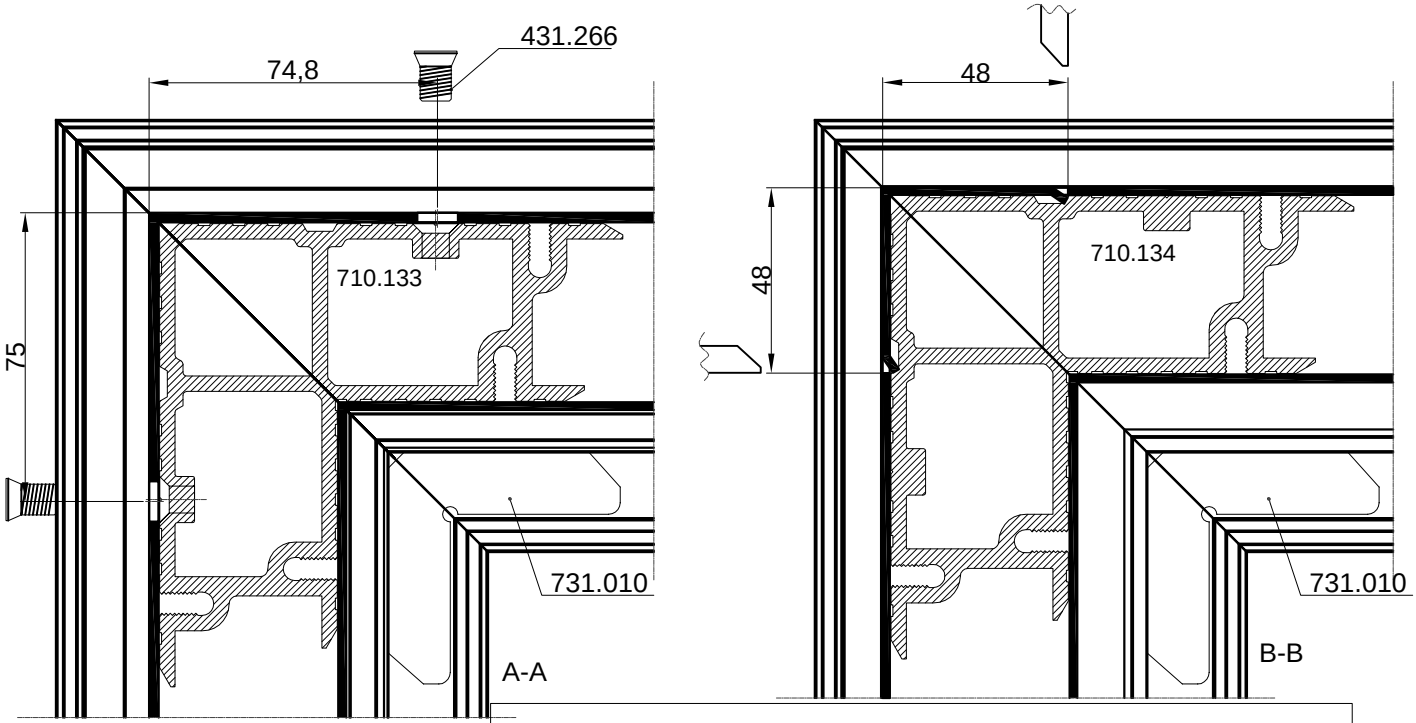


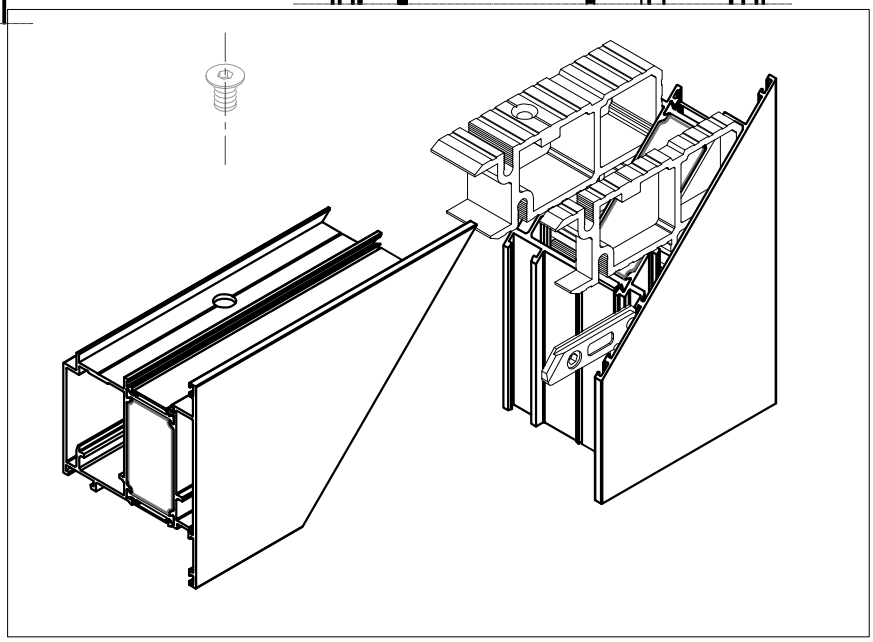


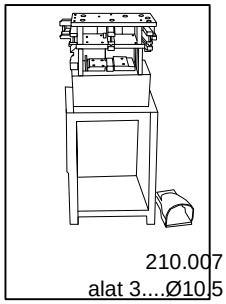
Spajanje profila FT-0563F kutnicima
Connection of profile FT-0563Fwith corner brackets


85
A
B
FT-0564F
710.134
710.132
112
C
8
22,4
48
48,7
48,7
710.132
731.010
A-A
48
48
710.134
731.010
B-B

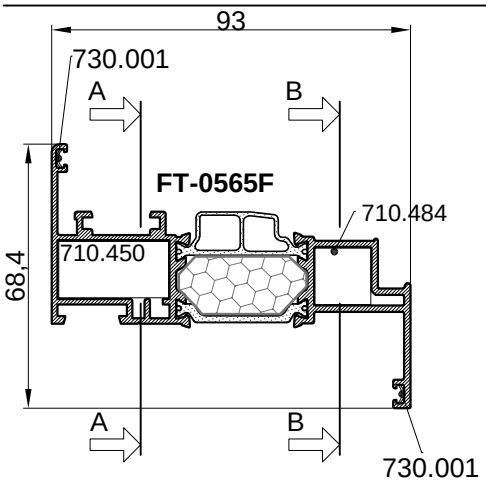


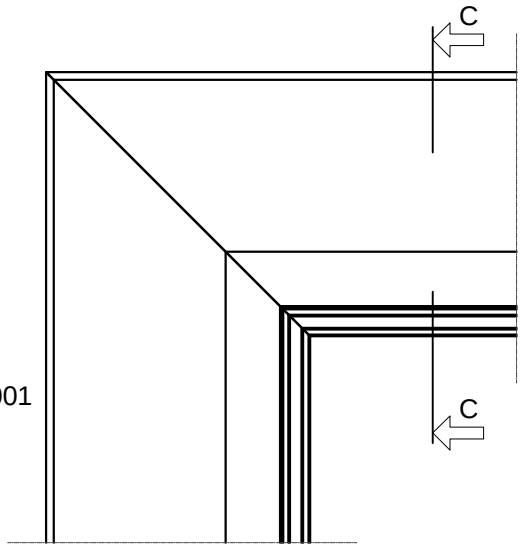


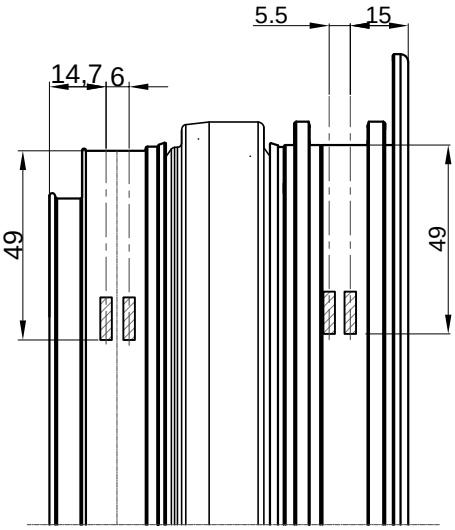


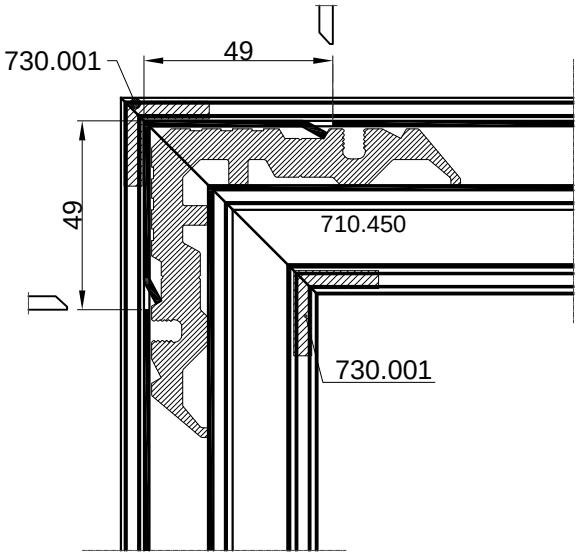


Spajanje profila FT-0564F kutnicima
Connection of profile FT-0564F with corner brackets

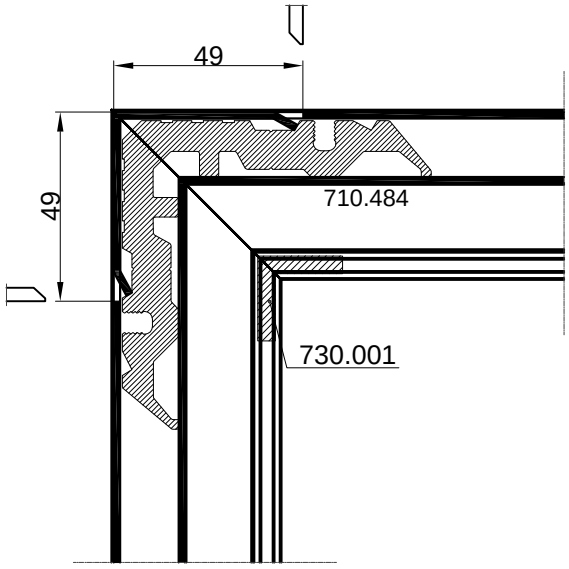




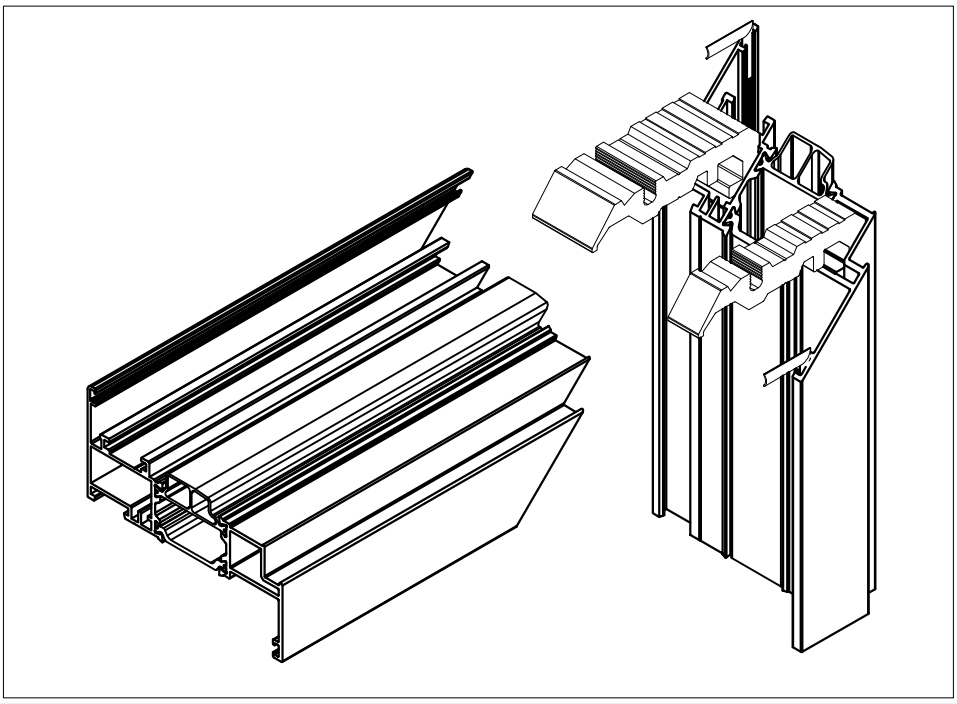




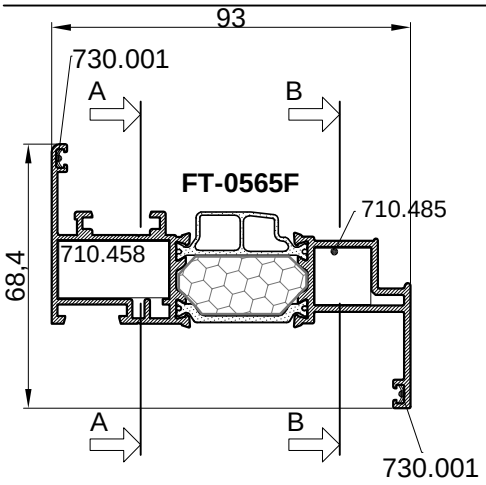
A-A

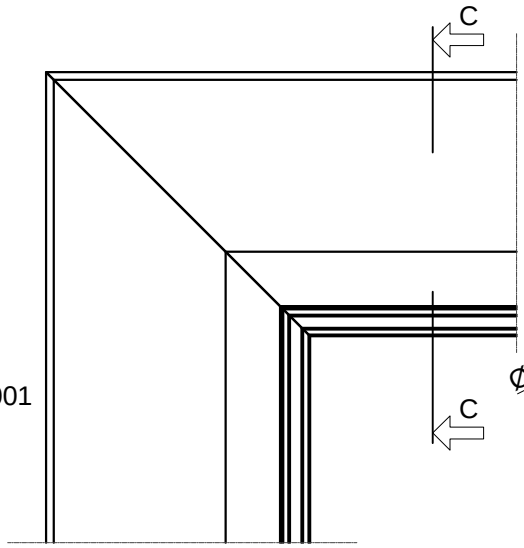


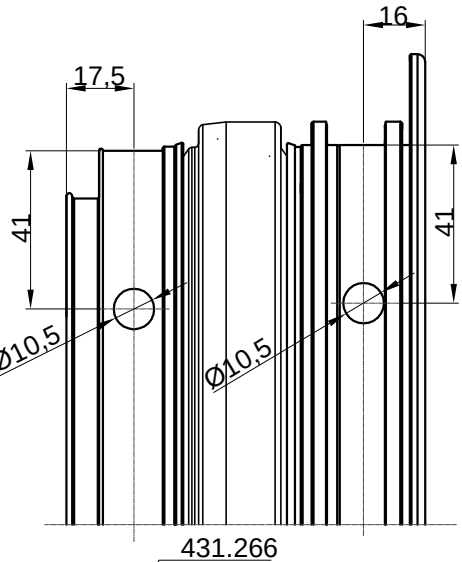
B-B

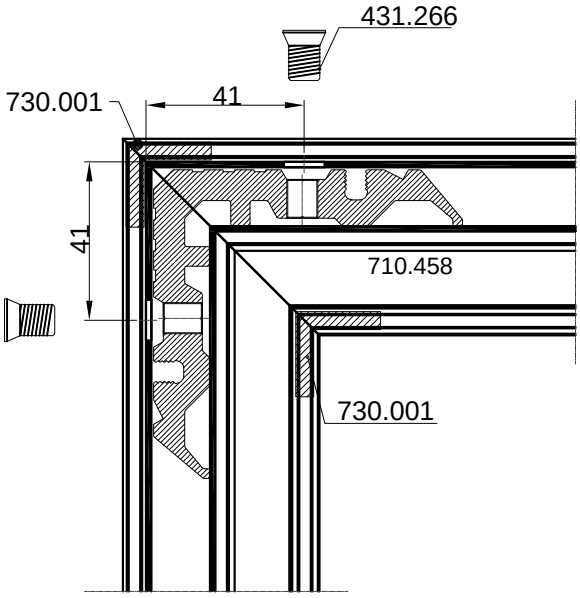


Spajanje profila FT-0565F kutnicima
Connection of profile FT-0565F with corner brackets

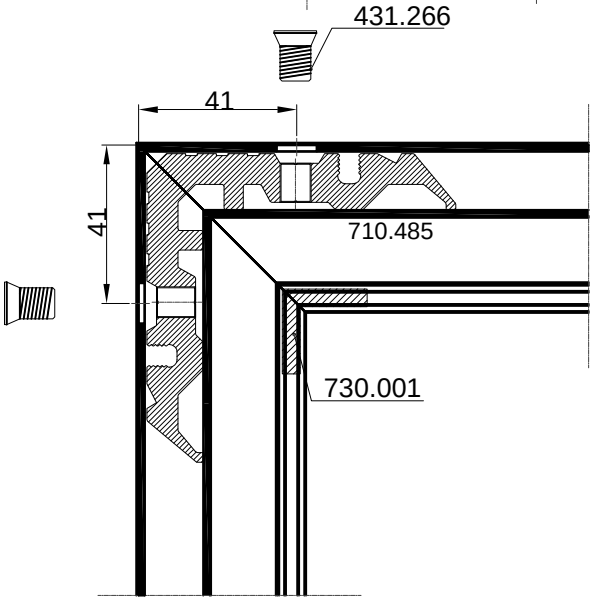




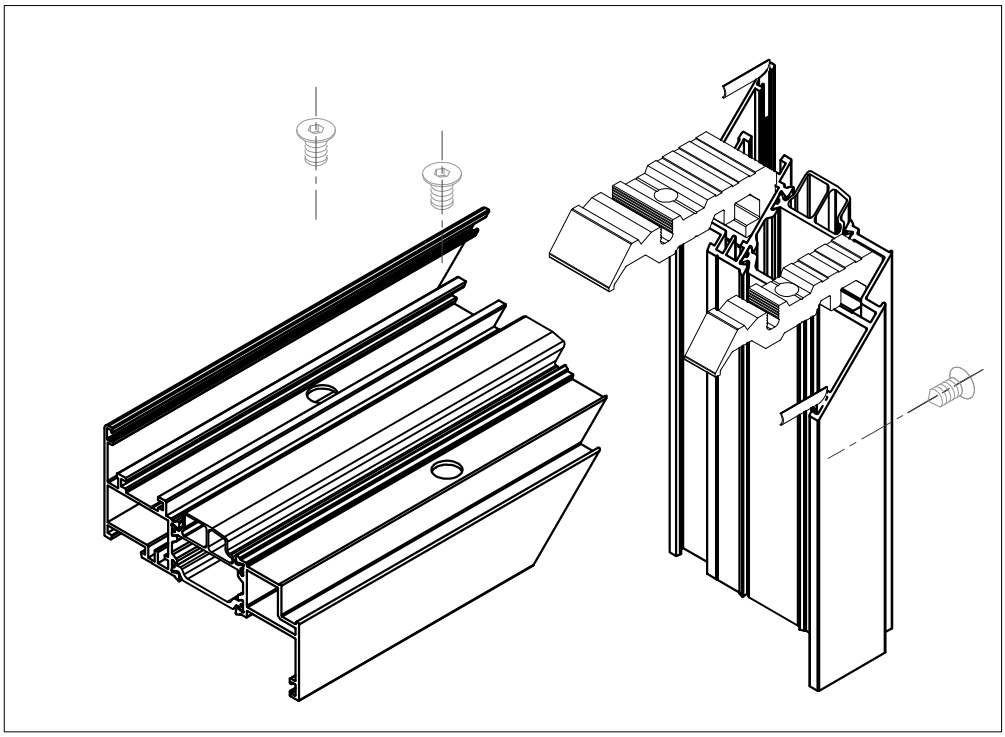




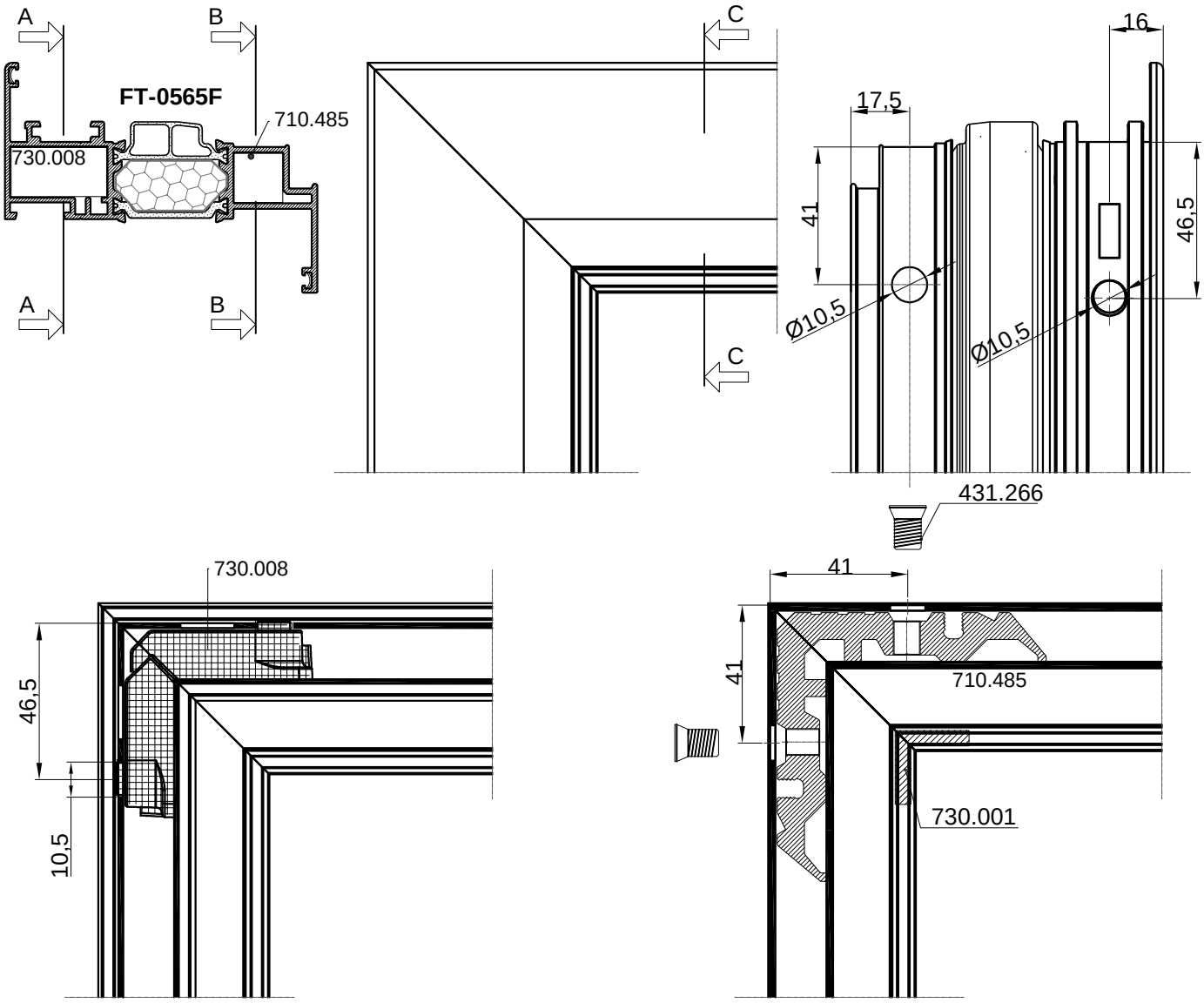
A-A

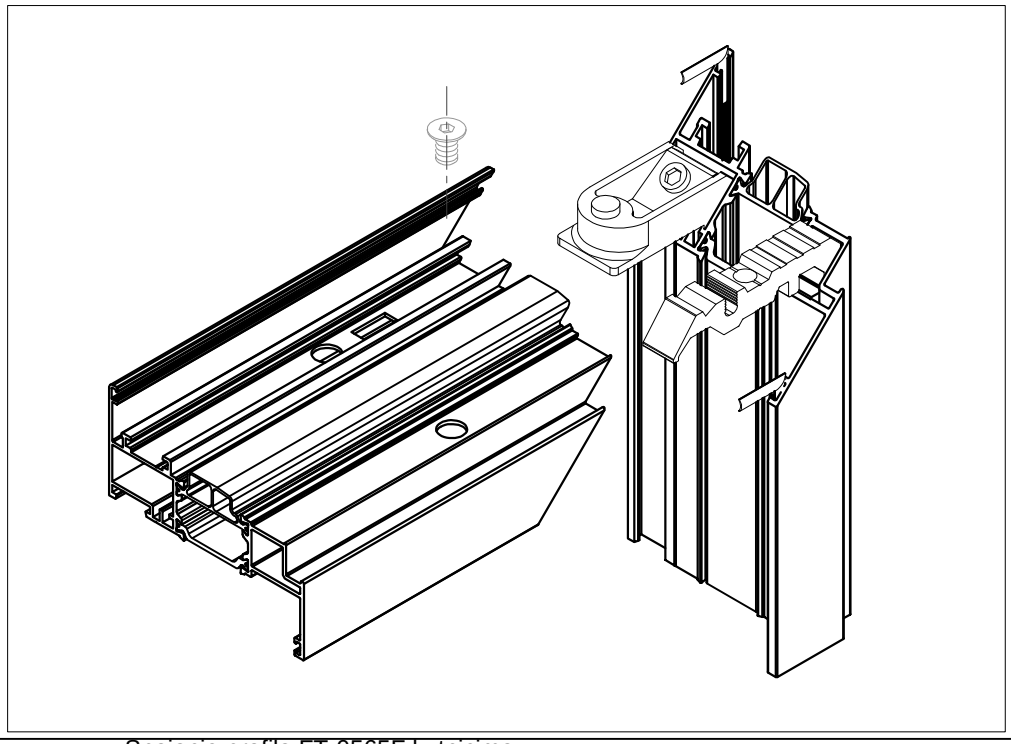


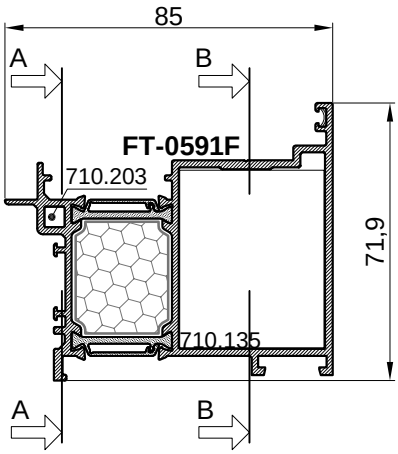
B-B

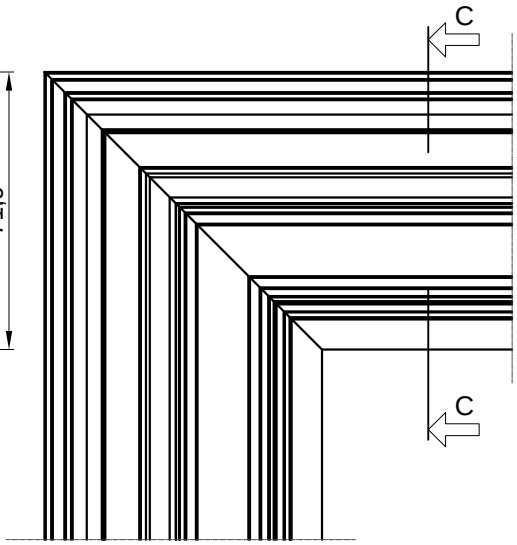


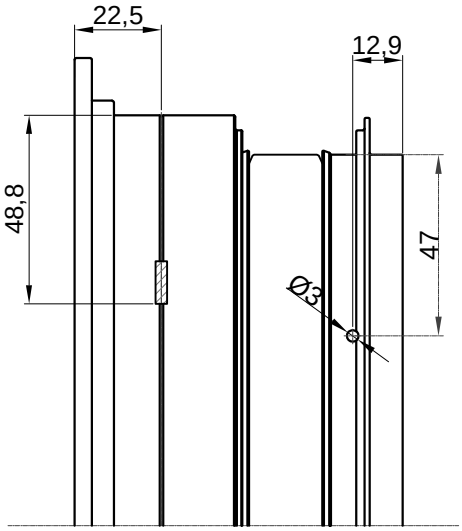
Spajanje profila FT-0565F kutnicima
Connection of profile FT-0565F with corner brackets

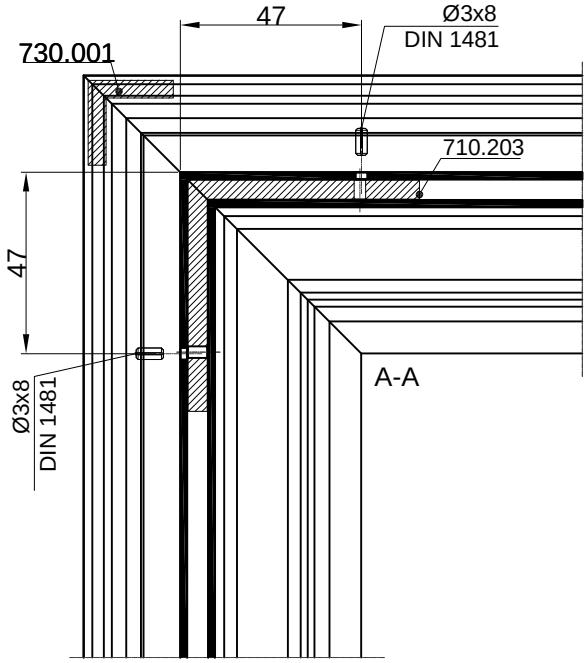

A
B
FT-0565F
710.485
730.008
A
B
C
C
16
17,5
41
46,5
Ø10,5
Ø10,5
431.266
730.008
46,5
10,5
41
41
710.485
730.001

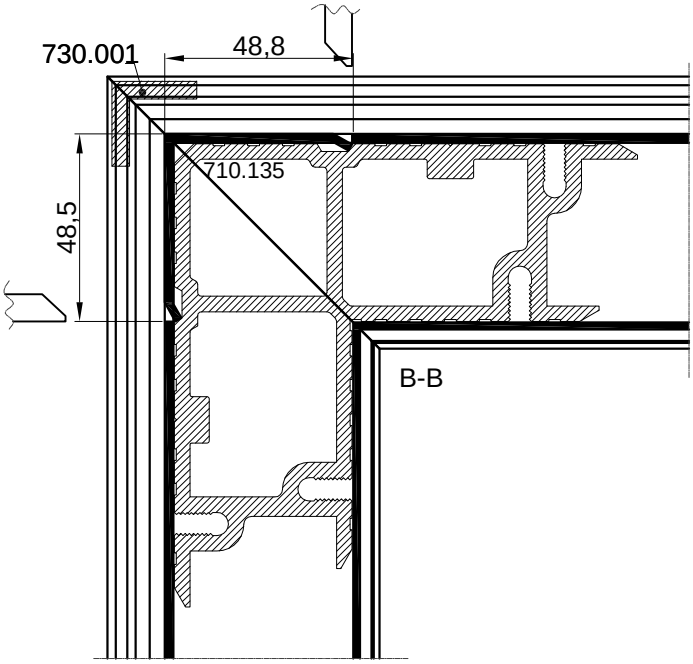


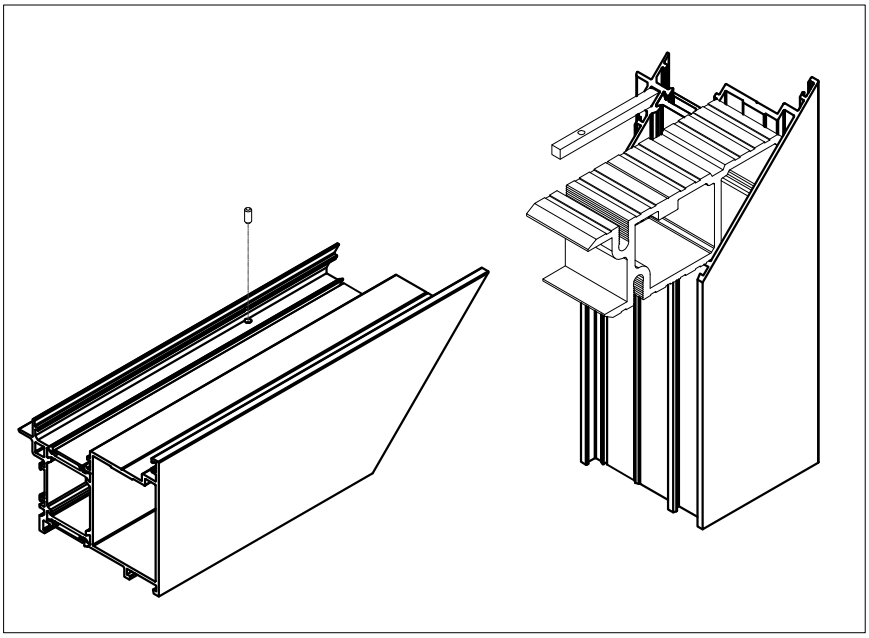

85
A
B
FT-0591F
710.203
71,9
710.135
A
B

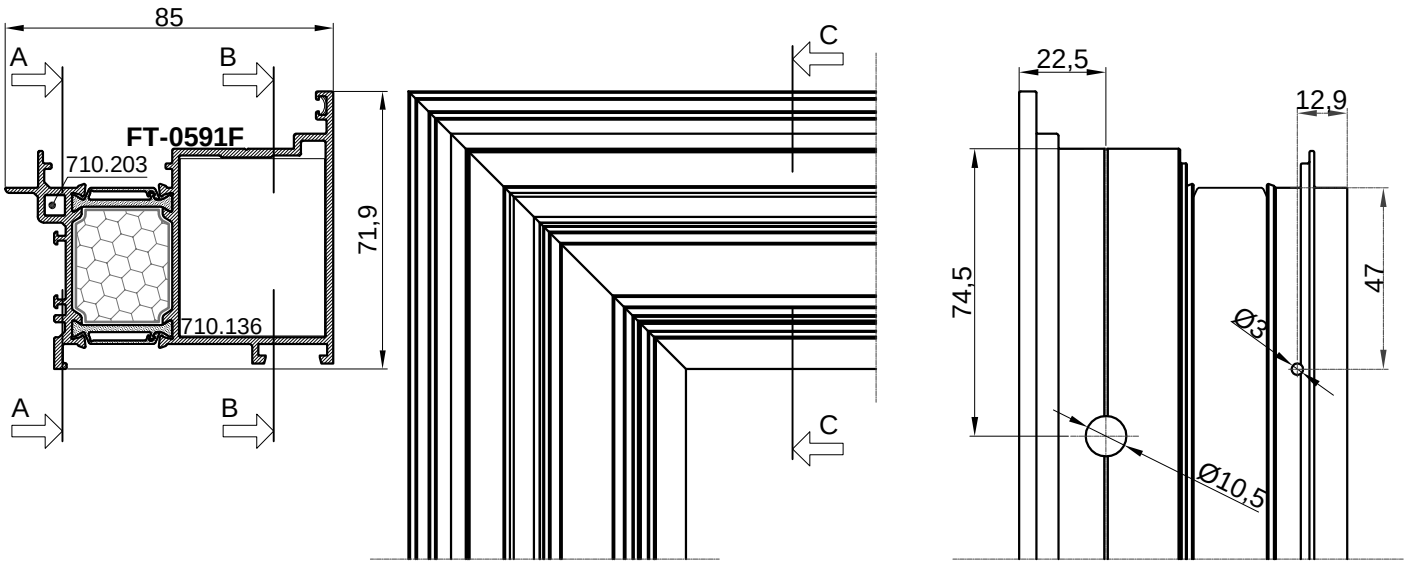

C
C

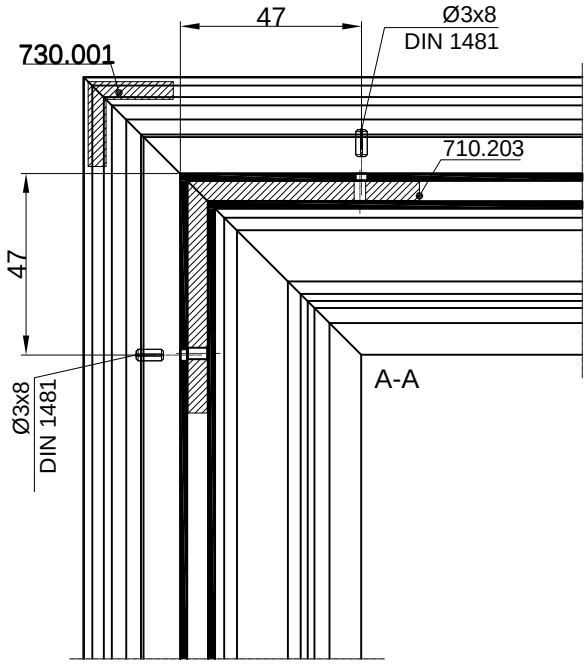

22,5
12,9
48,8
47
Ø3

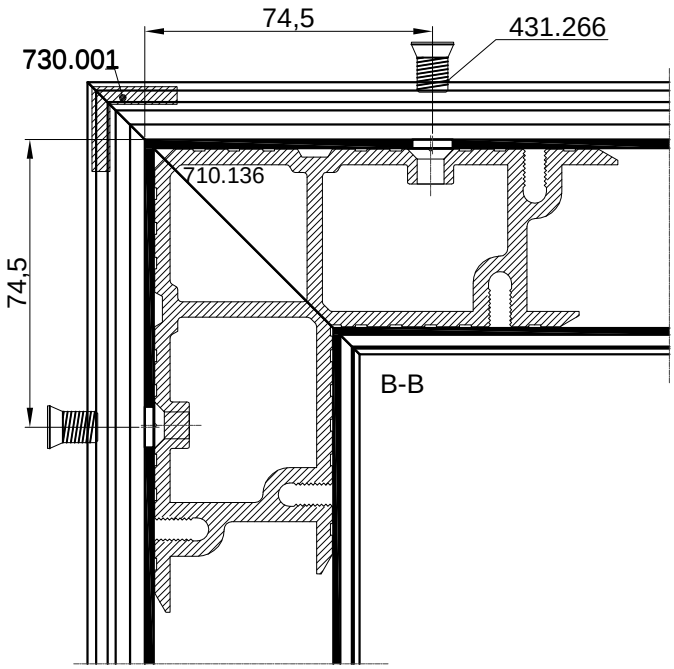

47
Ø3x8
DIN 1481
730.001
710.203
47
Ø3x8
DIN 1481
A-A

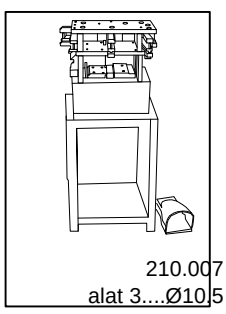

730.001
48,8
710.135
48,5
B-B

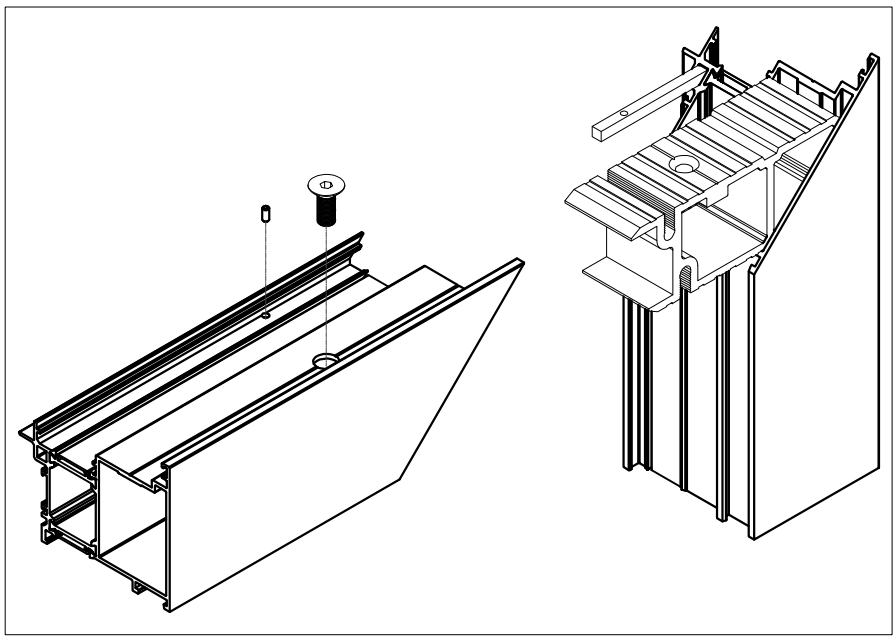


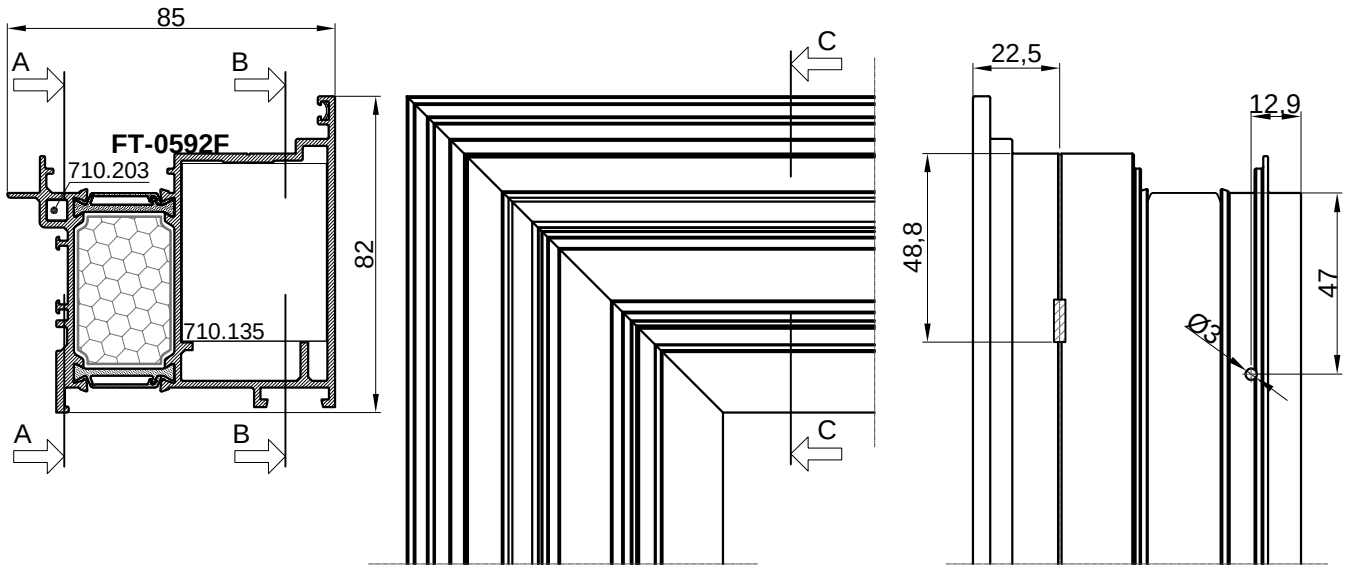

85
A
B
FT-0591F
710.203
71,9
710.136
A
B
C
C
22,5
12,9
74,5
47
Ø3
Ø10,5

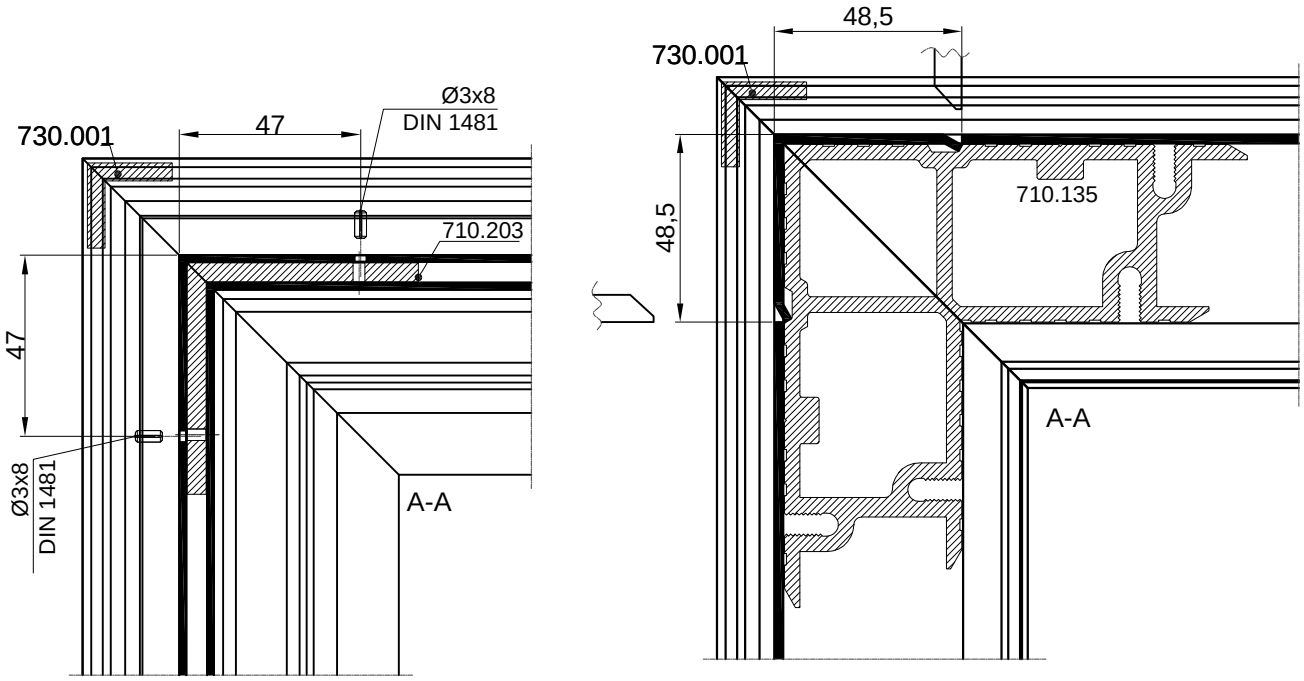

47
Ø3x8
DIN 1481
730.001
710.203
47
Ø3x8
DIN 1481
A-A

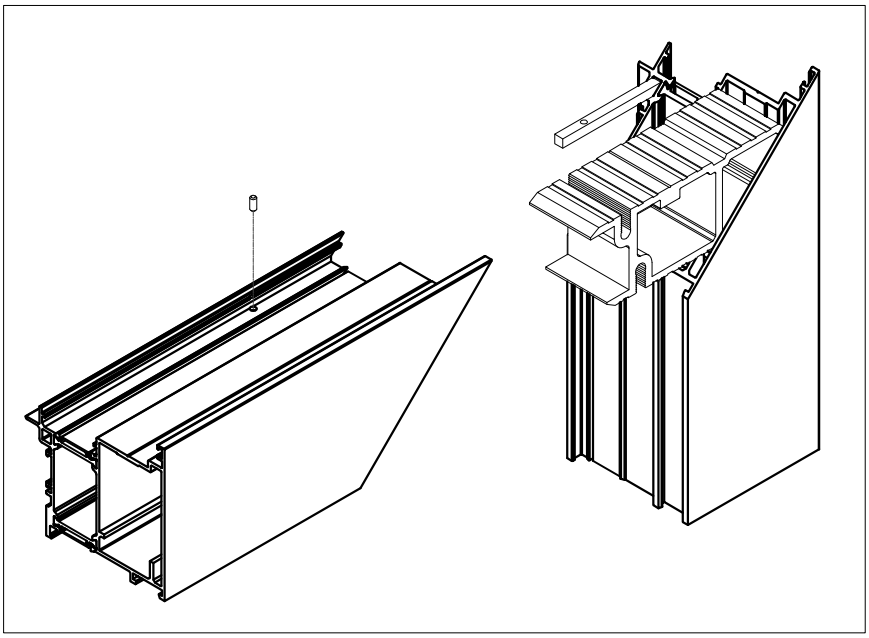

74,5
431.266
730.001
710.136
74,5
B-B


210.007
alat 3...Ø10,5

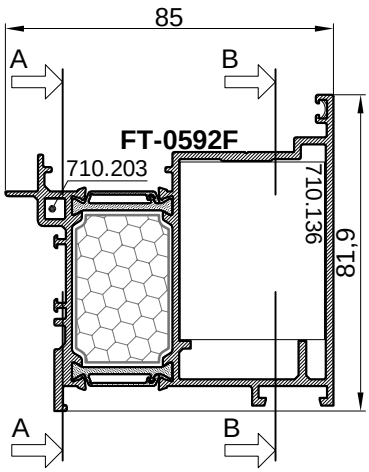


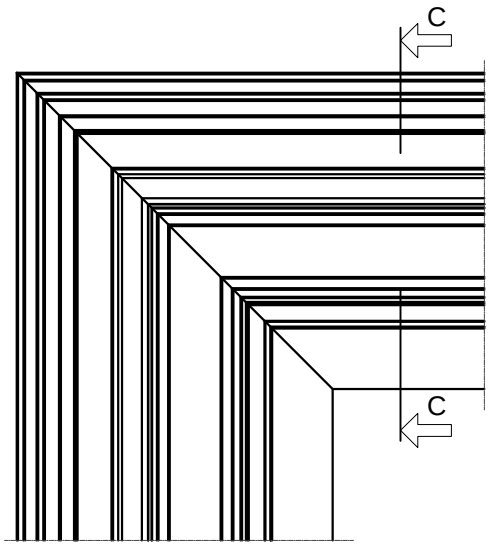


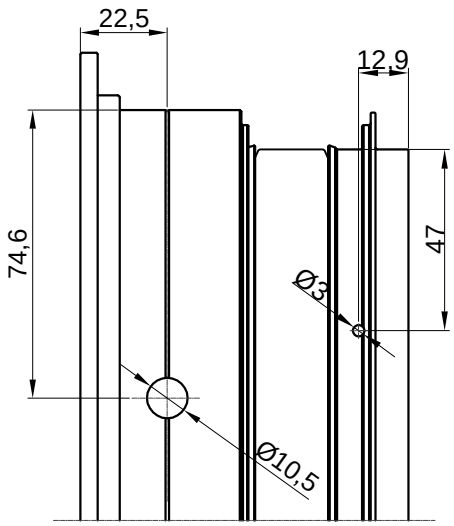


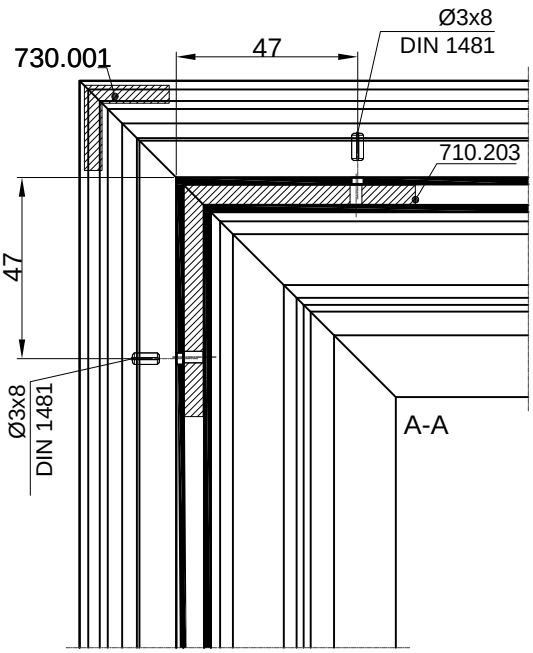


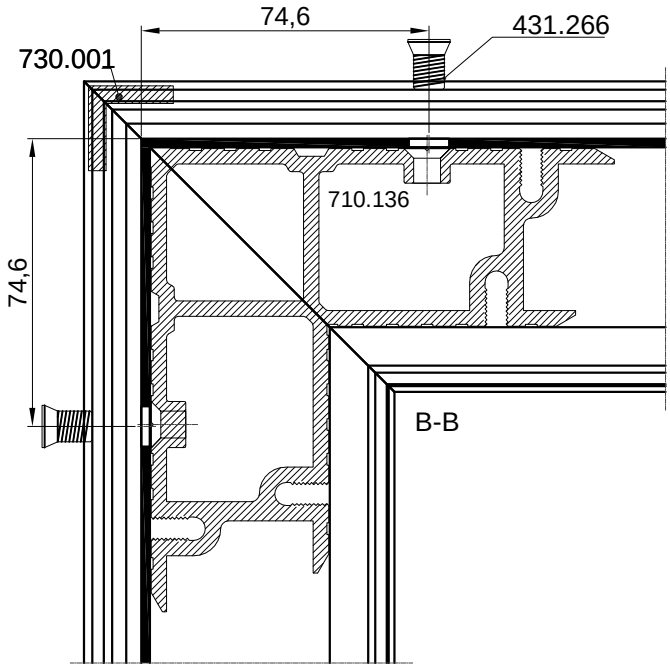
Spajanje profila FT-0592F kutnicima
Connection of profile FT-0592F with corner brackets

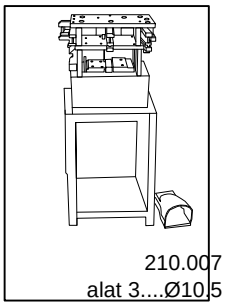


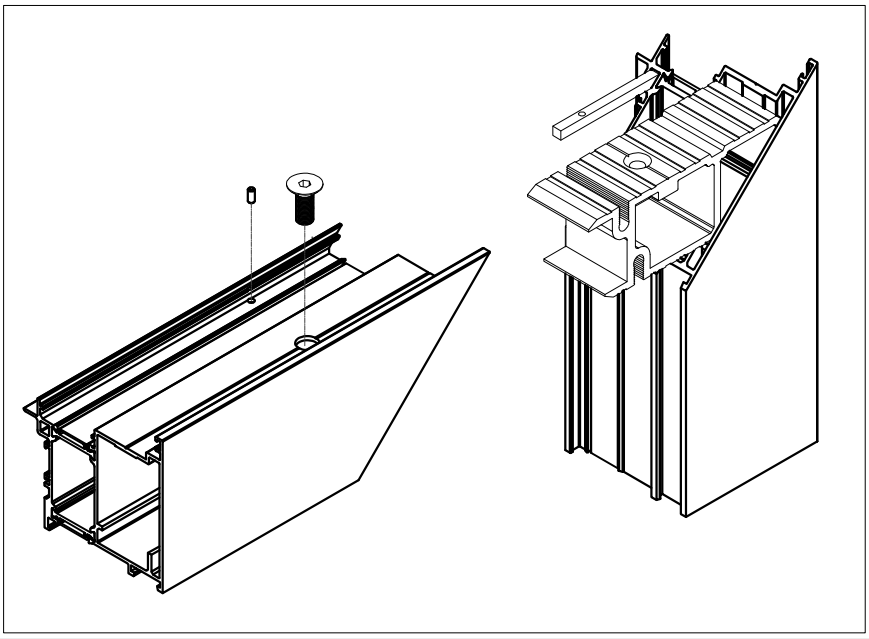




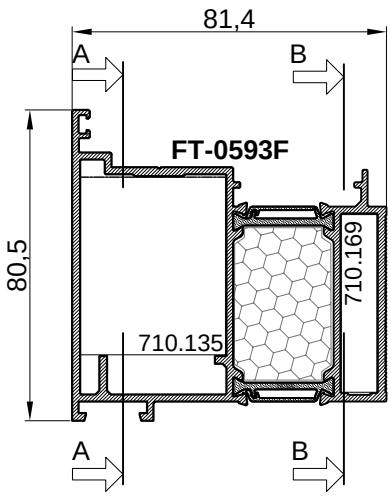


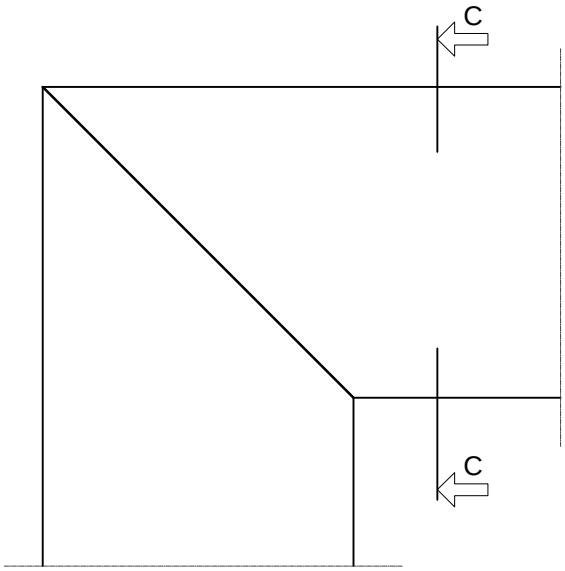


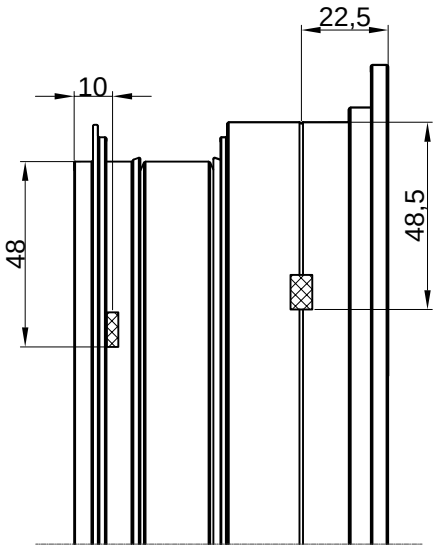


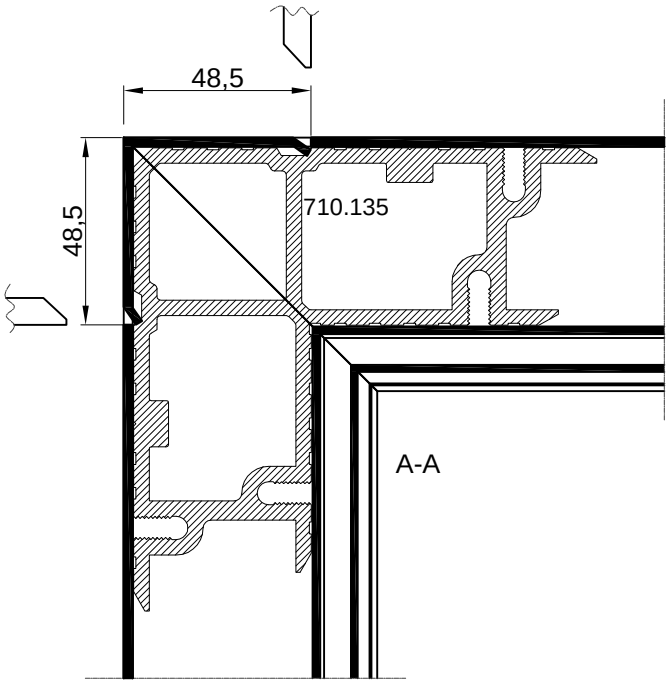


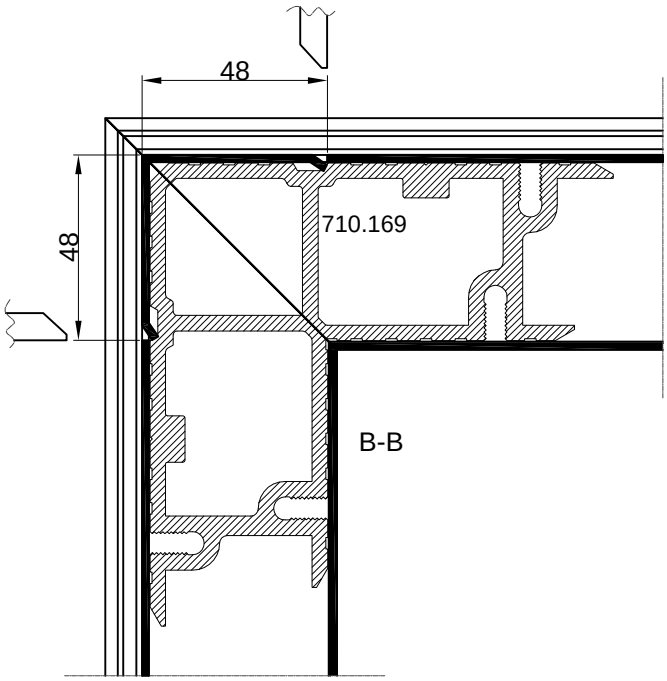
Spajanje profila FT-0592F kutnicima
Connection of profile FT-0592F with corner brackets

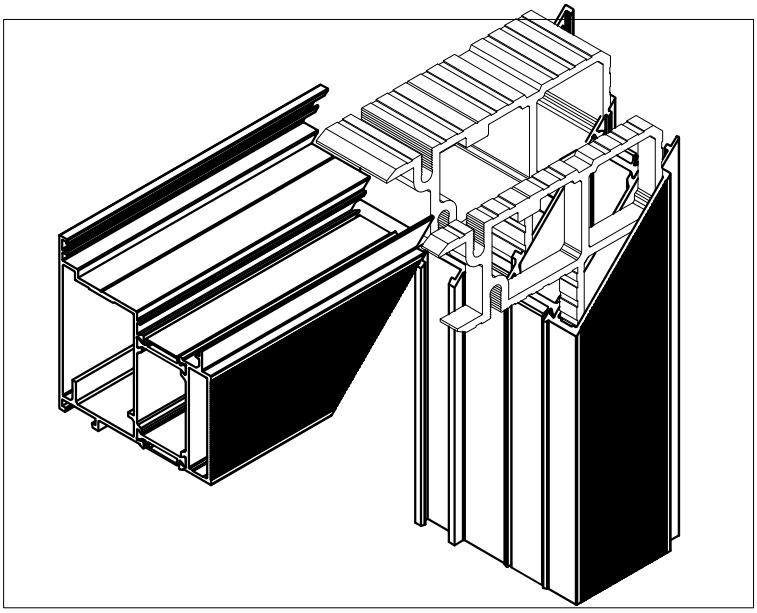

81,4
A
B
FT-0593F
80,5
710.169
710.135
A
B

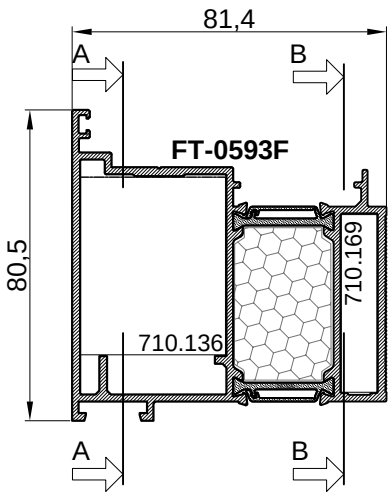

C
C

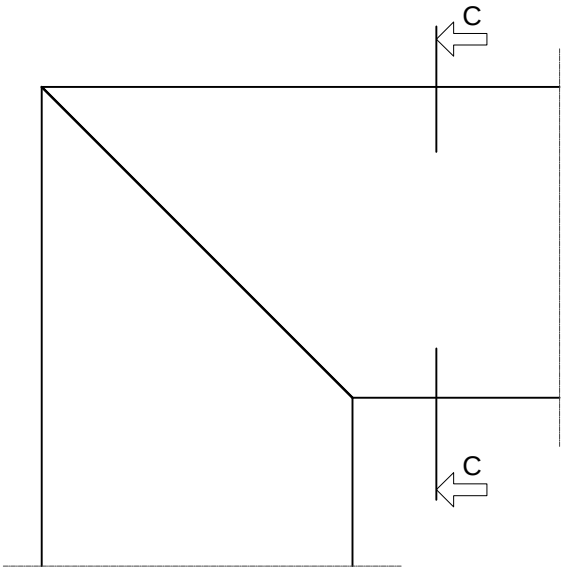

22,5
10
48
48,5

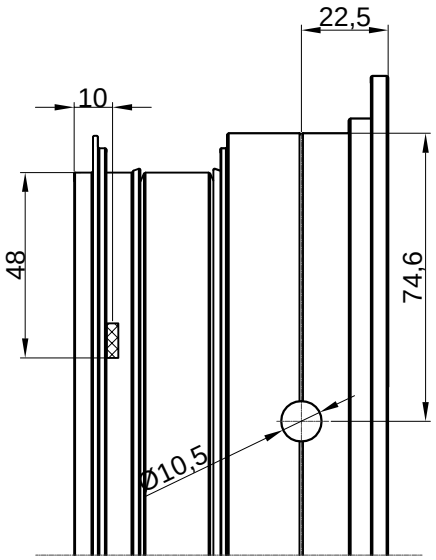

48,5
48,5
710.135
A-A

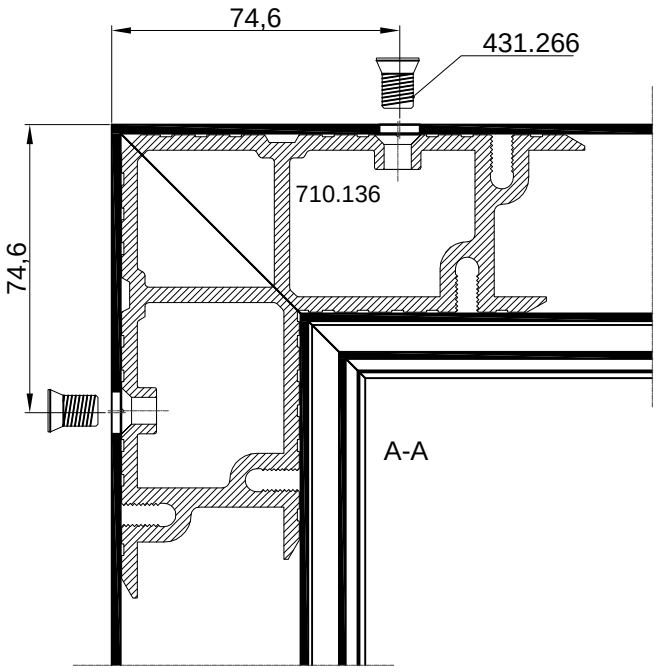

48
48
710.169
B-B

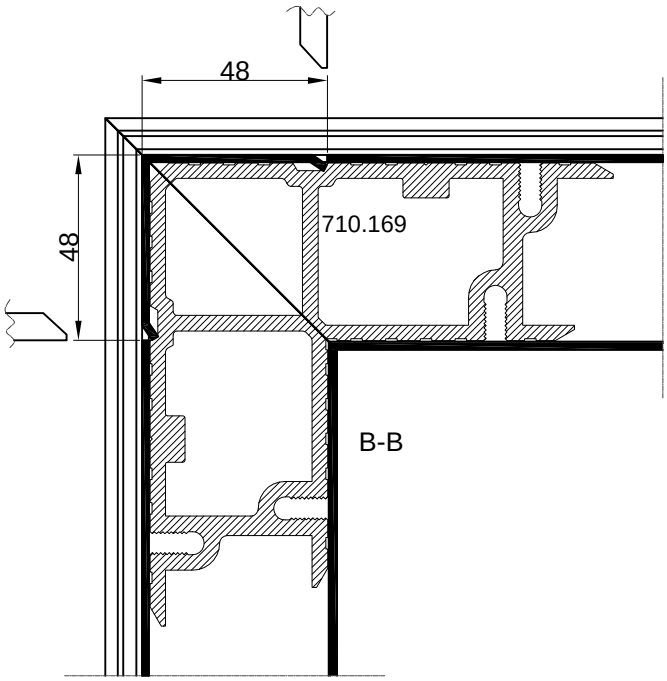


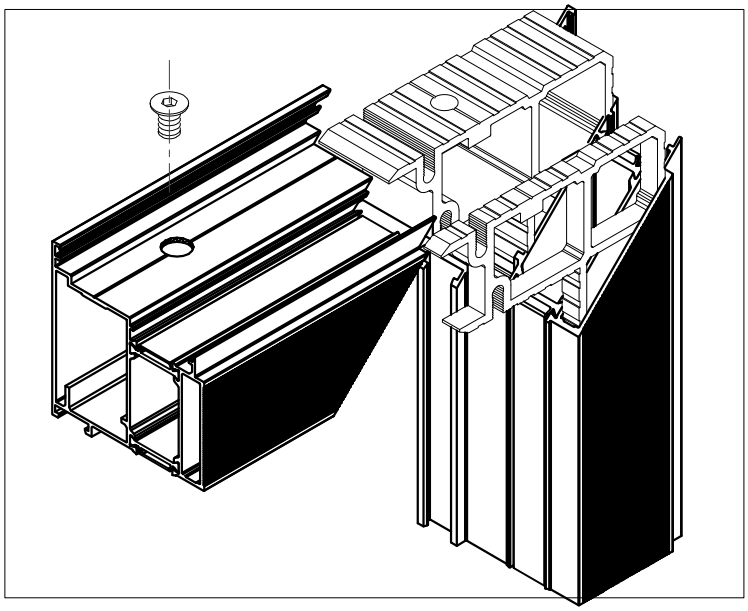

81,4
A
B
FT-0593F
80,5
710.169
710.136
A
B

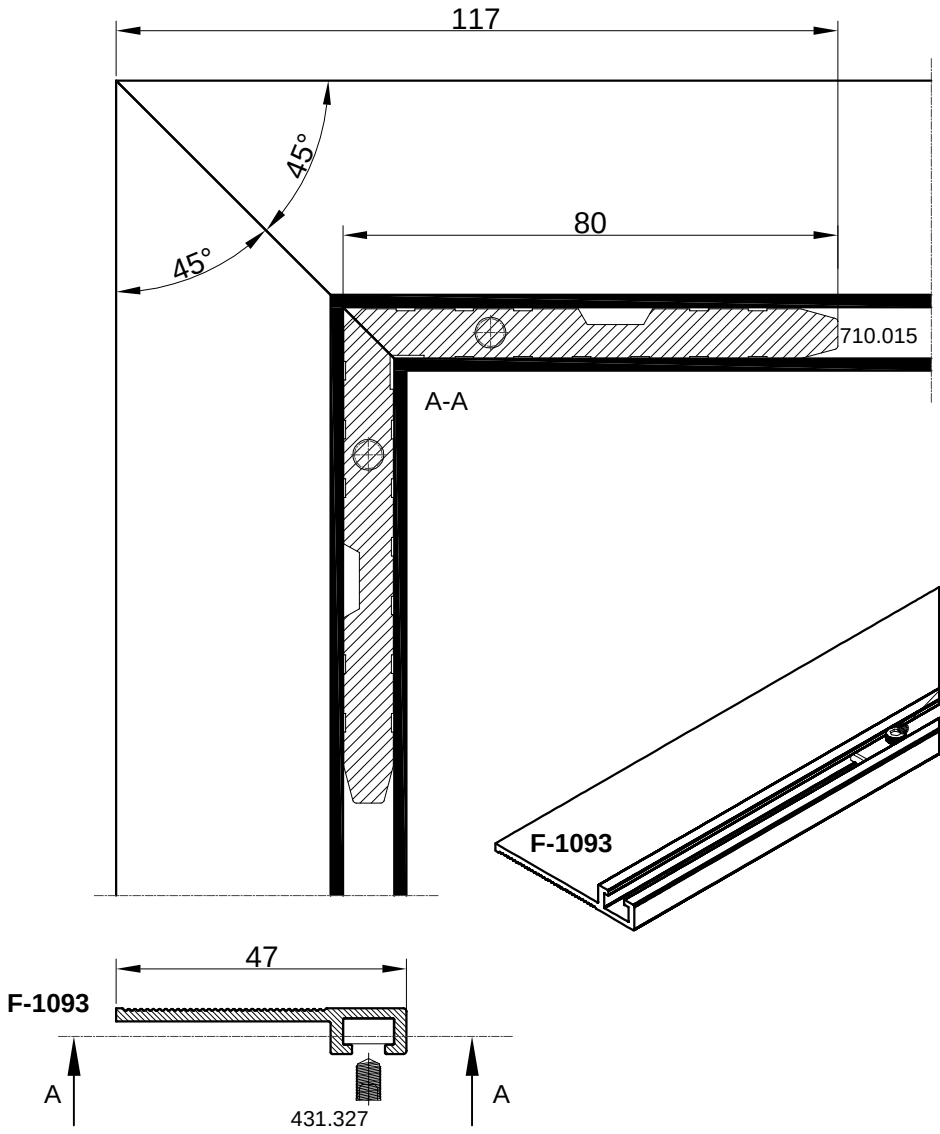

C
C

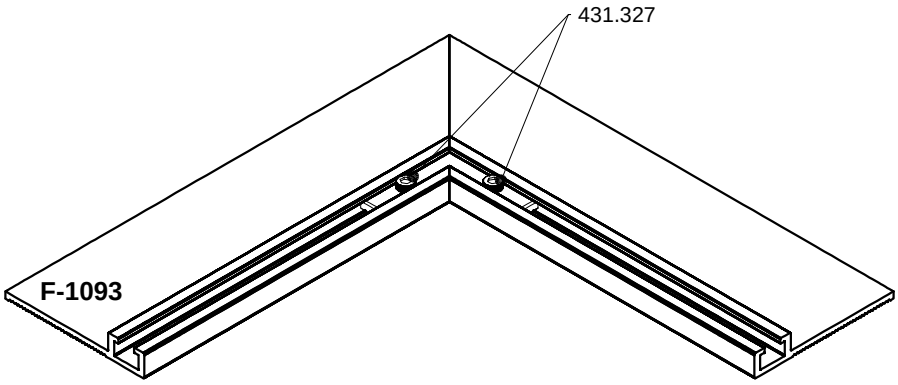

22,5
10
48
74,6
Ø10,5

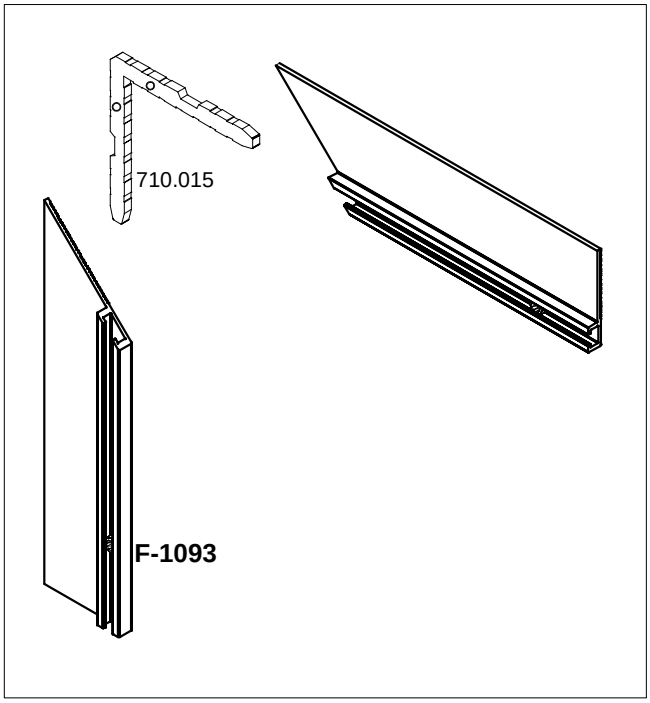

74,6
431.266
710.136
74,6
A-A

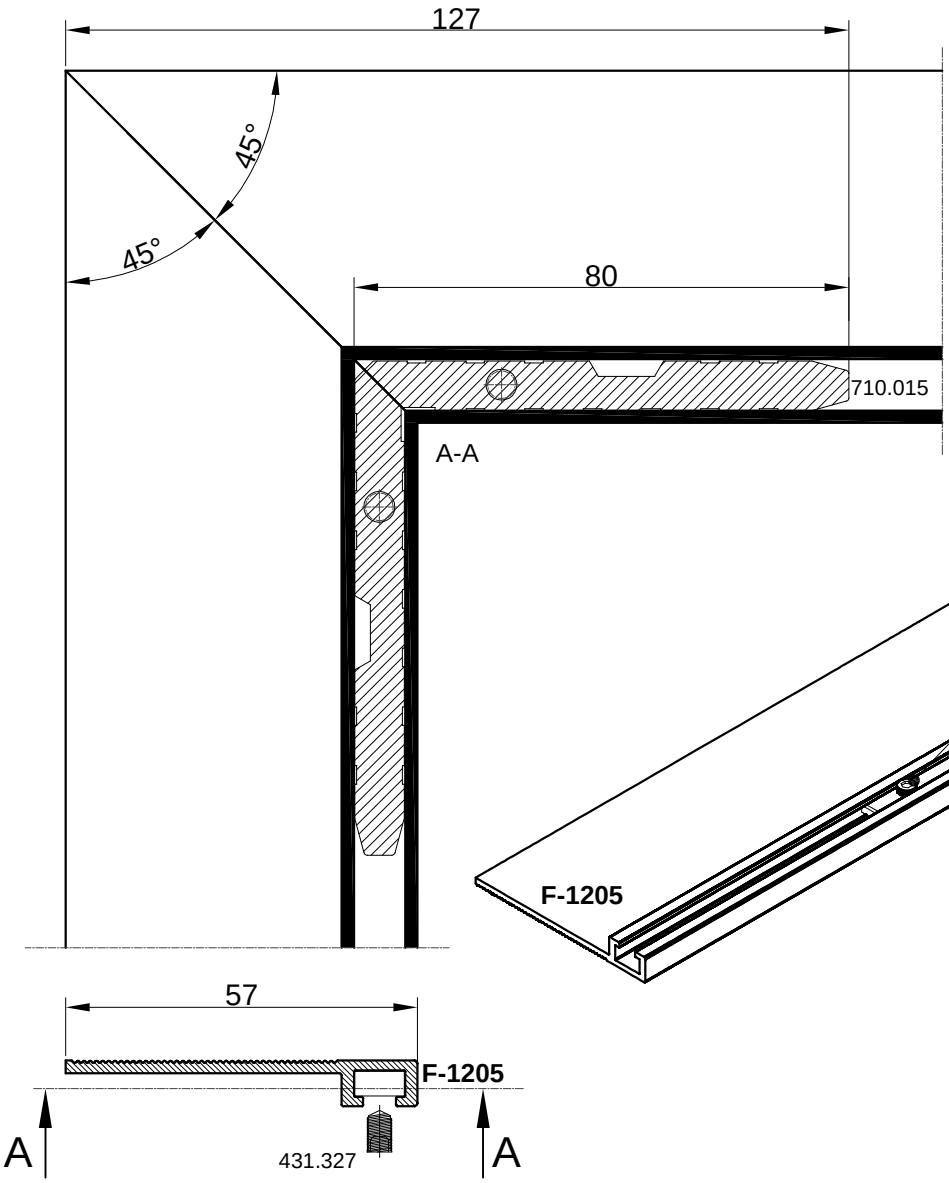

48
710.169
48
B-B

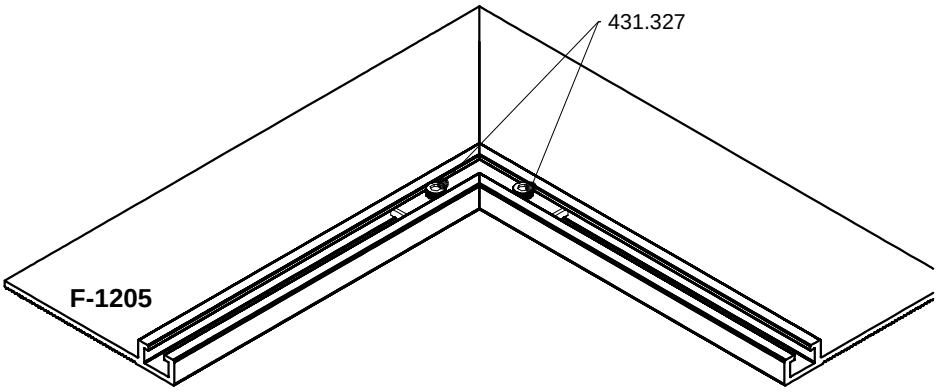



117
45°
45°
80
710.015
A-A
47
F-1093
A
A
431.327

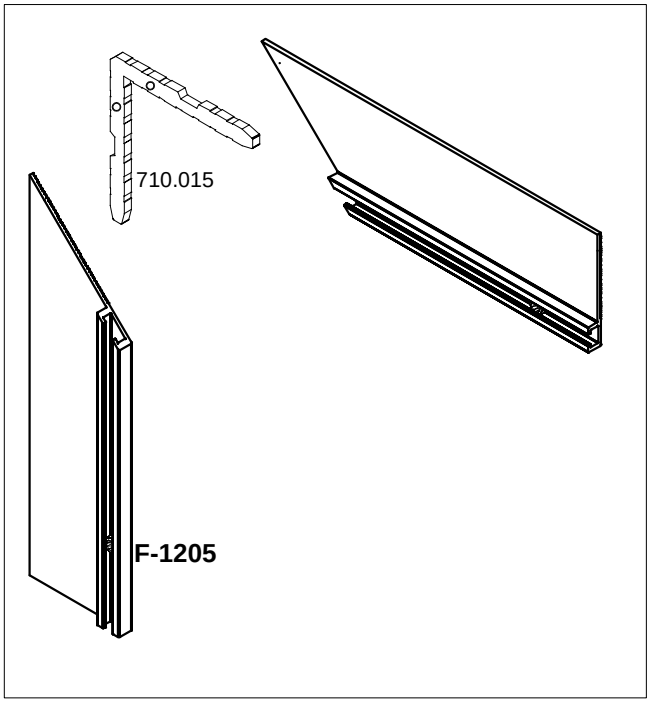

431.327
F-1093

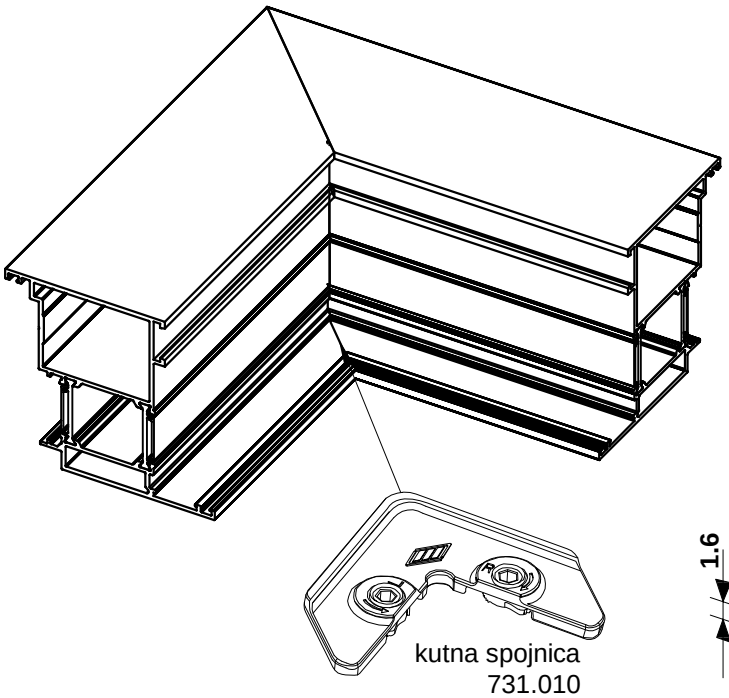

710.015
F-1093


127
45°
45°
80
710.015
A-A

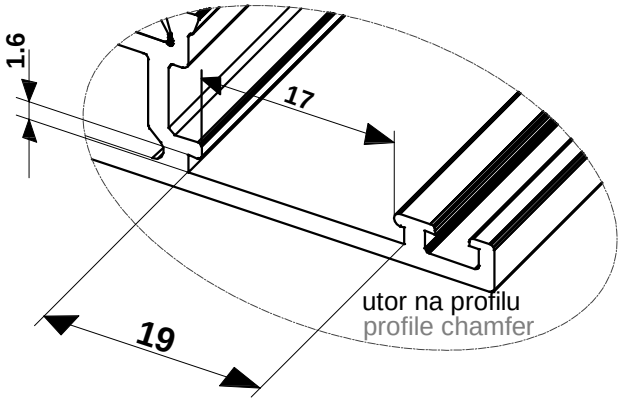

431.327
F-1205

57
F-1205
A
A
431.327

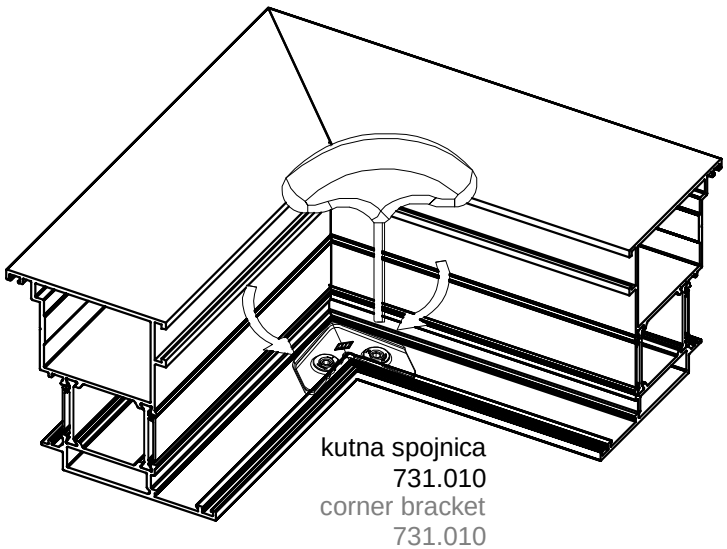

710.015
F-1205



kutna spojnica
731.010
corner bracket
731.010

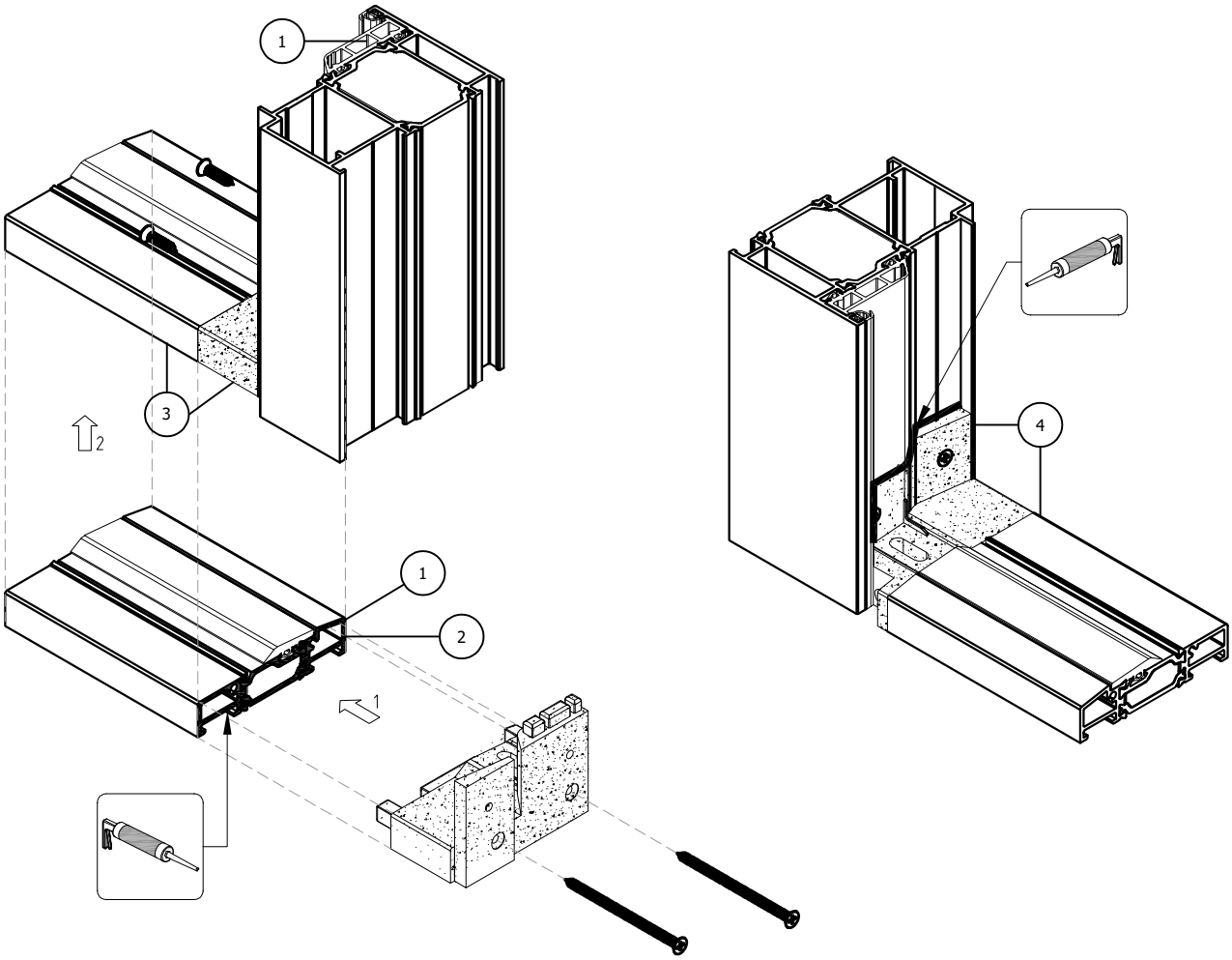


utor na profilu
profile chamfer



kutna spojnica
731.010
corner bracket
731.010

SPAJANJE PROFILA PRAGA SA PROFILOM RAMA POMOĆU UMETKA
CONNECTING THE THRESHOLD PROFILE WITH FRAME PROFILE USING END INSERT



POSTUPAK SPAJANJA PROFILA :

1. Sve površine koje se spajaju-rezove očistiti i odmastiti odgovarajućim sredstvom /npr. "Henkel" - *Teroson VR 20 ili Teroson FL+* /.
2. Na profilu praga premazati sve površine koje se spajaju ljepilom za metal /npr. "Henkel" - *Teroson MS 939* /.

2.1. Ljepilo za metal ubrizgati u komore profila praga na mjestima gdje ulazi umetak (po opsegu komore)

3. Profil praga i umetak izravnati i spojiti.
4. Profil praga sa spojenim umetkom izravnati i spojiti sa profilom rama.
5. **Nakon spajanja profila, sve spojeve profila i umetka ispuniti ljepilom za metal** /npr. "Henkel" - *Teroson MS 939* /.
6. Dio ljepila koji iscuri između rezova očistiti sredstvom za čišćenje i odmašćivanje /npr. "Henkel" - *Teroson VR 20 ili Teroson FL+* /.

NAPOMENA:

Lijepljenjem rezova, kao i svih spojeva profila sa ljepilima za metal, osigurava se potrebna zrako i vodonepropusnosti spoja kao i dodatna mehanička čvrstoća spoja.

PROFILE CONNECTION PROCEDURE:

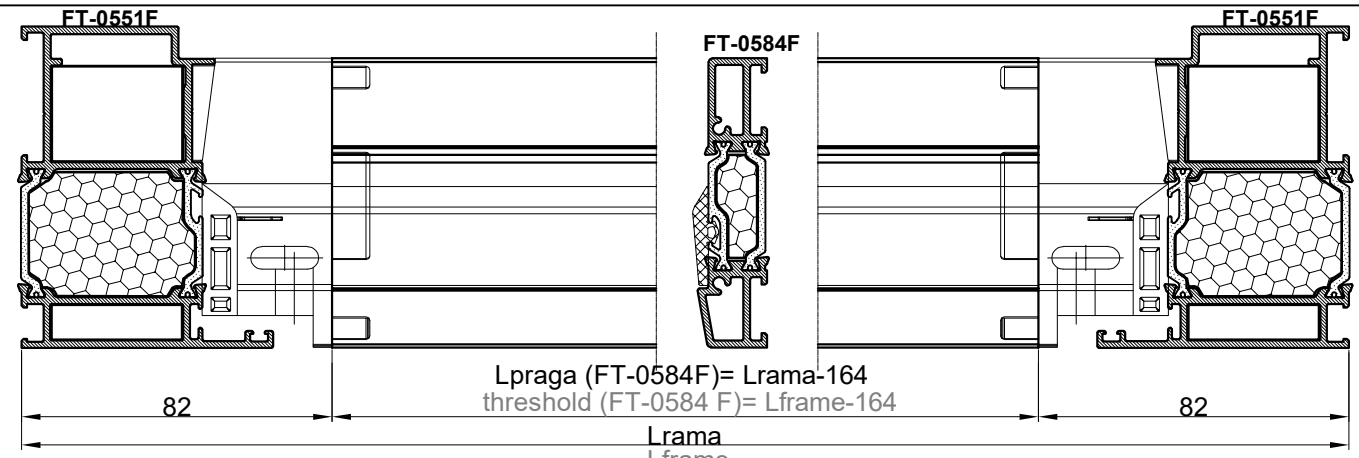
1. Clean and degrease all connecting surfaces with suitable products /e.g. "Henkel" - *Teroson VR 20 ili Teroson FL+* /.
2. On threshold profile smear all connecting surfaces with metal glue /e.g. "Henkel" - *Teroson MS 939* /.

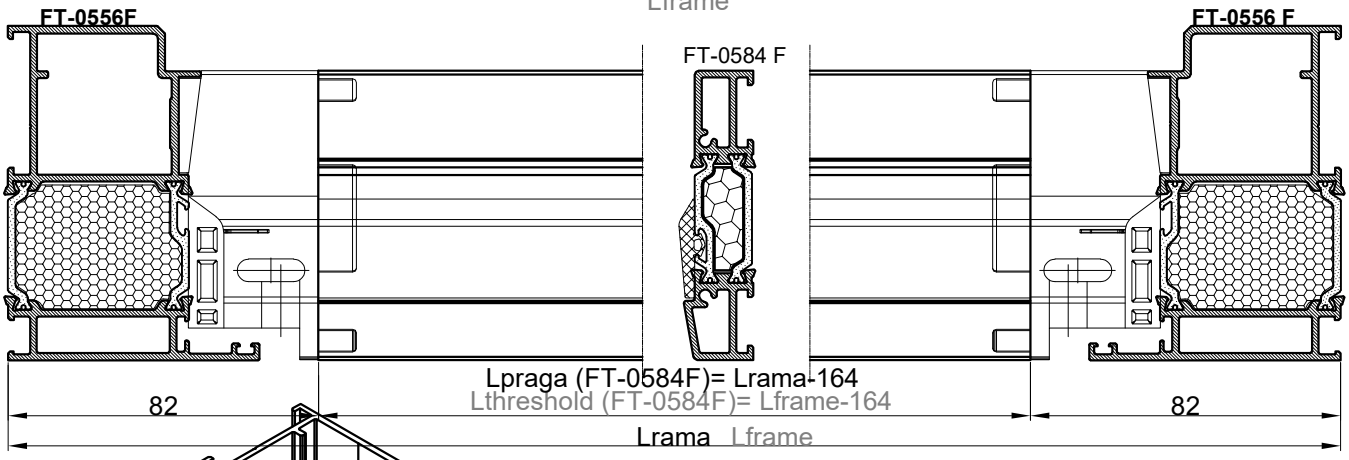
2.1. Inject metal glue into chambers on ends of the profile for the insert (on chamber edges).

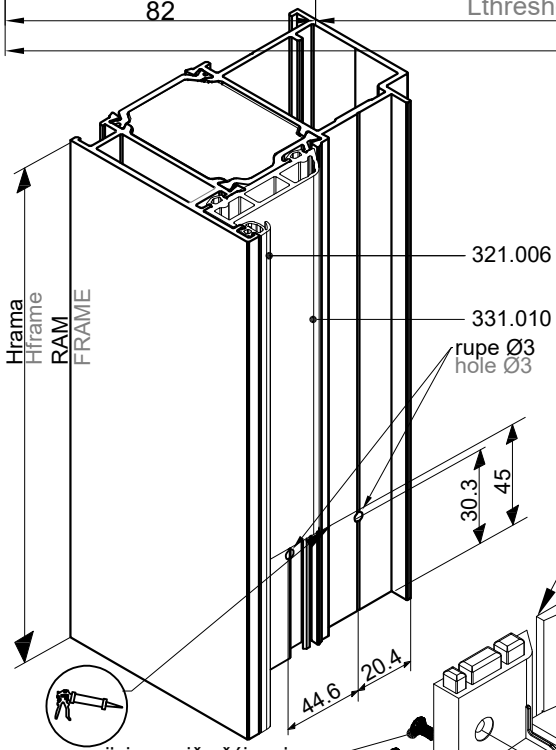
3. Level threshold profile with insert and connect them
4. Level threshold profile with the connected insert with the frame and connect them
5. **After joining the profiles, all profile connections must be filled with metal glue** /e.g. "Henkel" - *Teroson MS 939* /.
6. Leaked glue that comes from the joints remove with cleaning and degreasing products /e.g. "Henkel" - *Teroson VR 20 ili Teroson FL+* /.

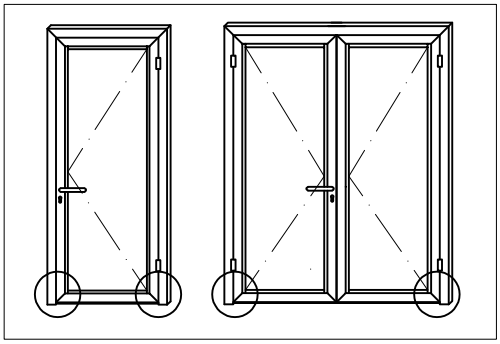
NOTE:

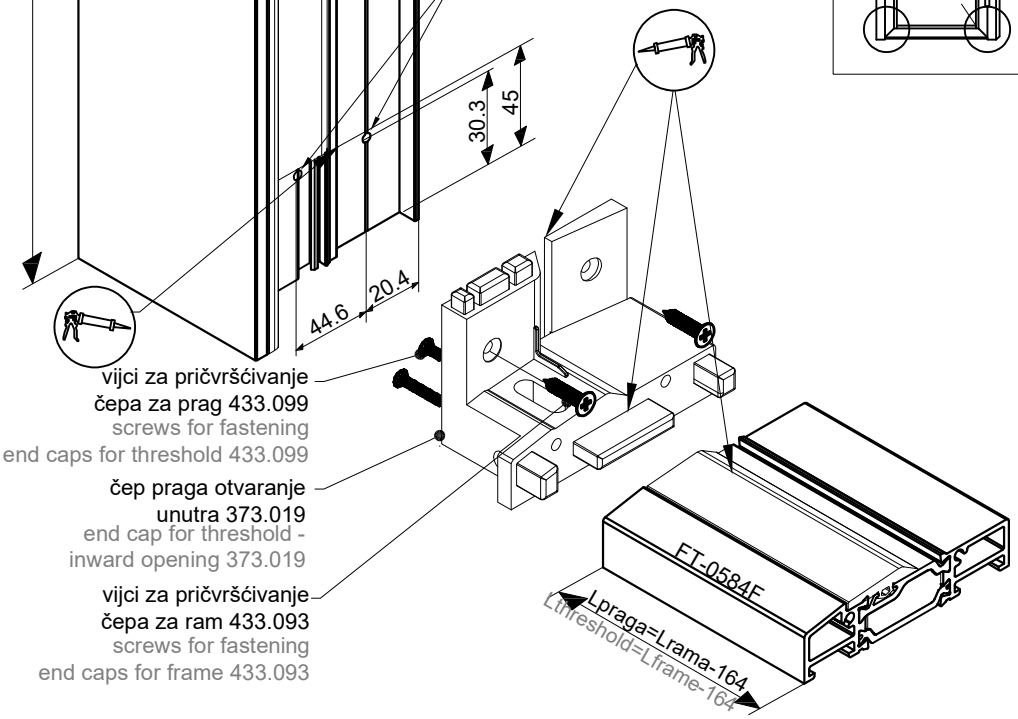
By gluing the profile, as well as all profile joints with a metal glue, necessary air and water tightness of the joint as well as additional mechanical properties is ensured.

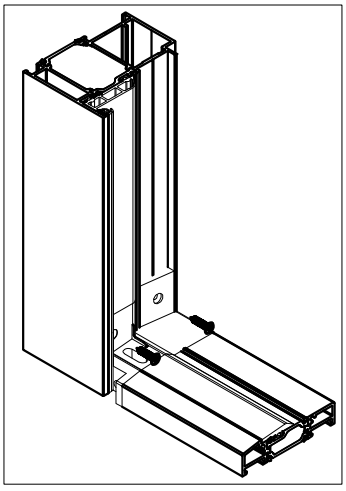

FT-0551F
FT-0584F
FT-0551F
Lpraga (FT-0584F)= Lrama-164
threshold (FT-0584 F)= Lframe-164
82
82
Lrama
Lframe

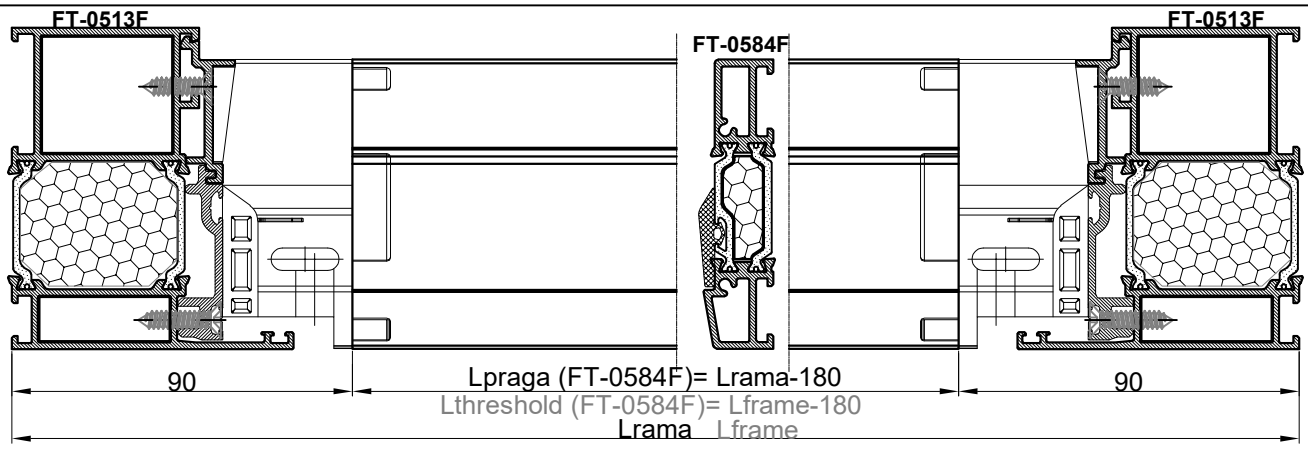

FT-0556F
FT-0584 F
FT-0556 F
Lpraga (FT-0584F)= Lrama-164
Lthreshold (FT-0584F)= Lframe-164
82
82
Lrama
Lframe

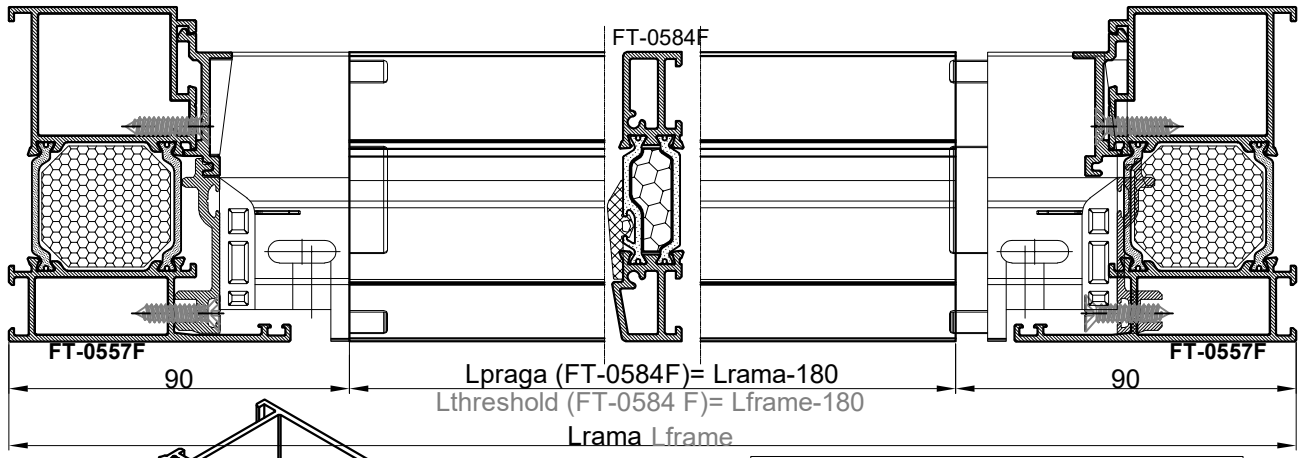

Hrama
Hframe
RAM
FRAME
321.006
331.010
rupe Ø3
hole Ø3
30.3
45
44.6
20.4

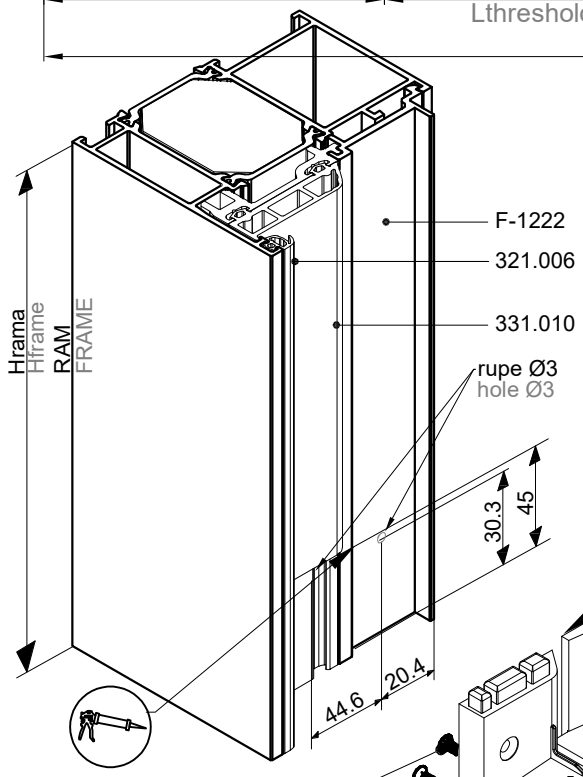


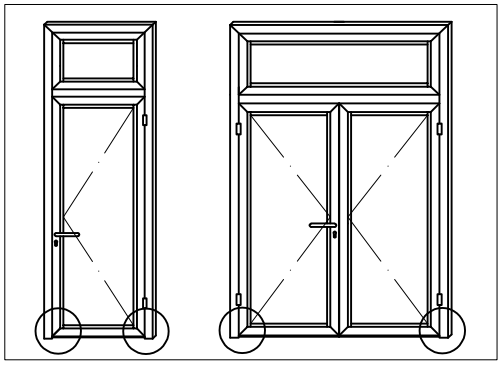

vijci za pričvršćivanje čepa za prag 433.099
screws for fastening end caps for threshold 433.099
čep praga otvaranje unutra 373.019
end cap for threshold - inward opening 373.019
vijci za pričvršćivanje čepa za ram 433.093
screws for fastening end caps for frame 433.093
FT-0584F
Lpraga=Lrama-164
Lthreshold=Lframe-164

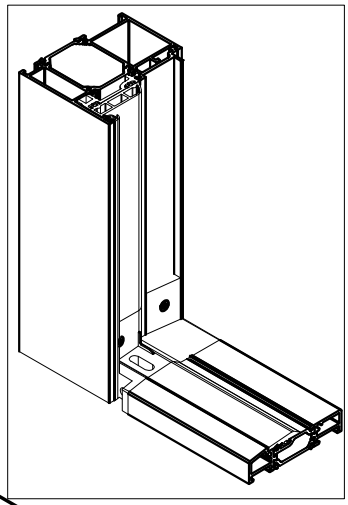


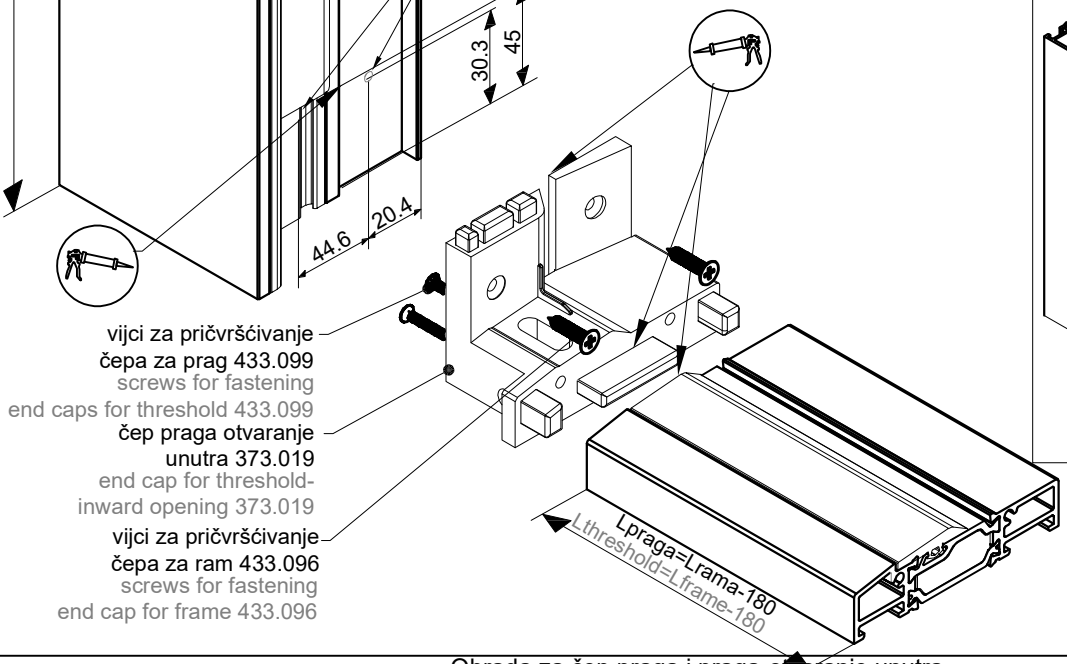

FT-0513F
FT-0584F
FT-0513F
90
Lpraga (FT-0584F)= Lrama-180
Lthreshold (FT-0584F)= Lframe-180
Lrama Lframe
90

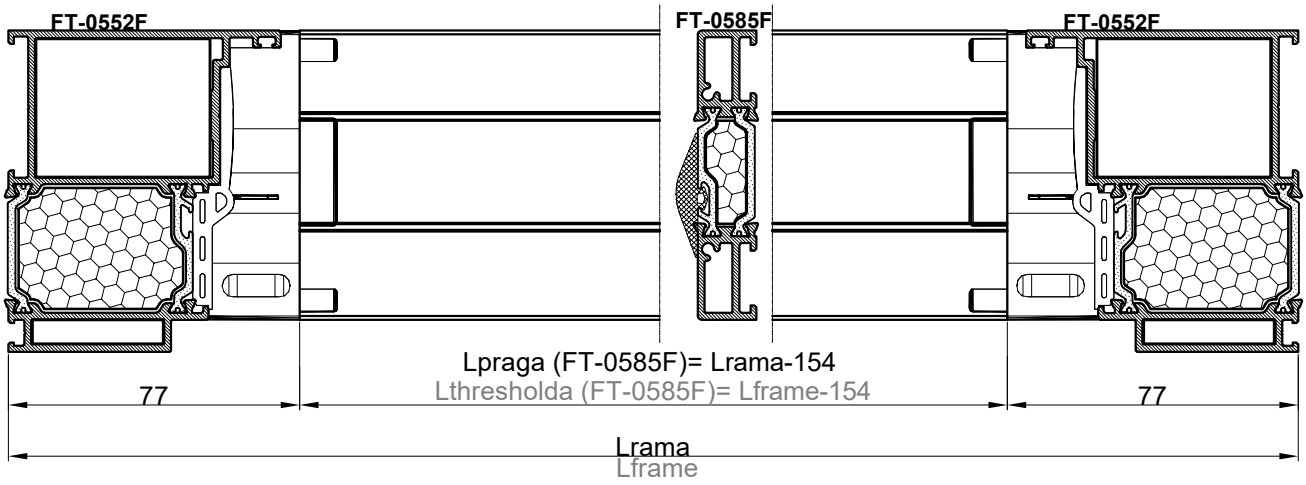

FT-0584F
FT-0557F
FT-0557F
90
Lpraga (FT-0584F)= Lrama-180
Lthreshold (FT-0584 F)= Lframe-180
Lrama Lframe
90

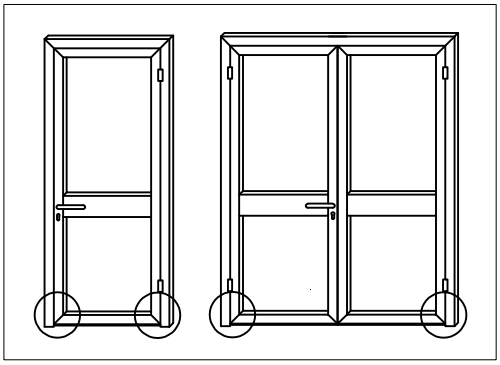

Hrama
Hframe
RAM
FRAME
F-1222
321.006
331.010
rupe Ø3
hole Ø3
30.3
45
44.6
20.4

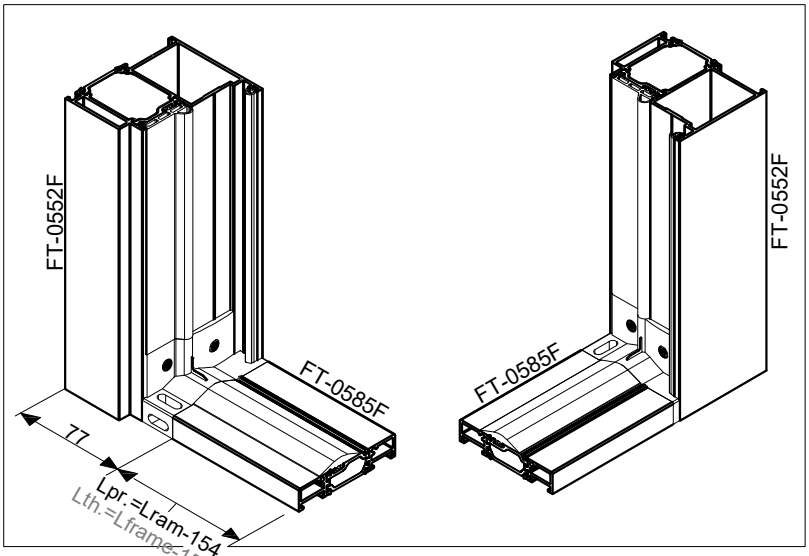


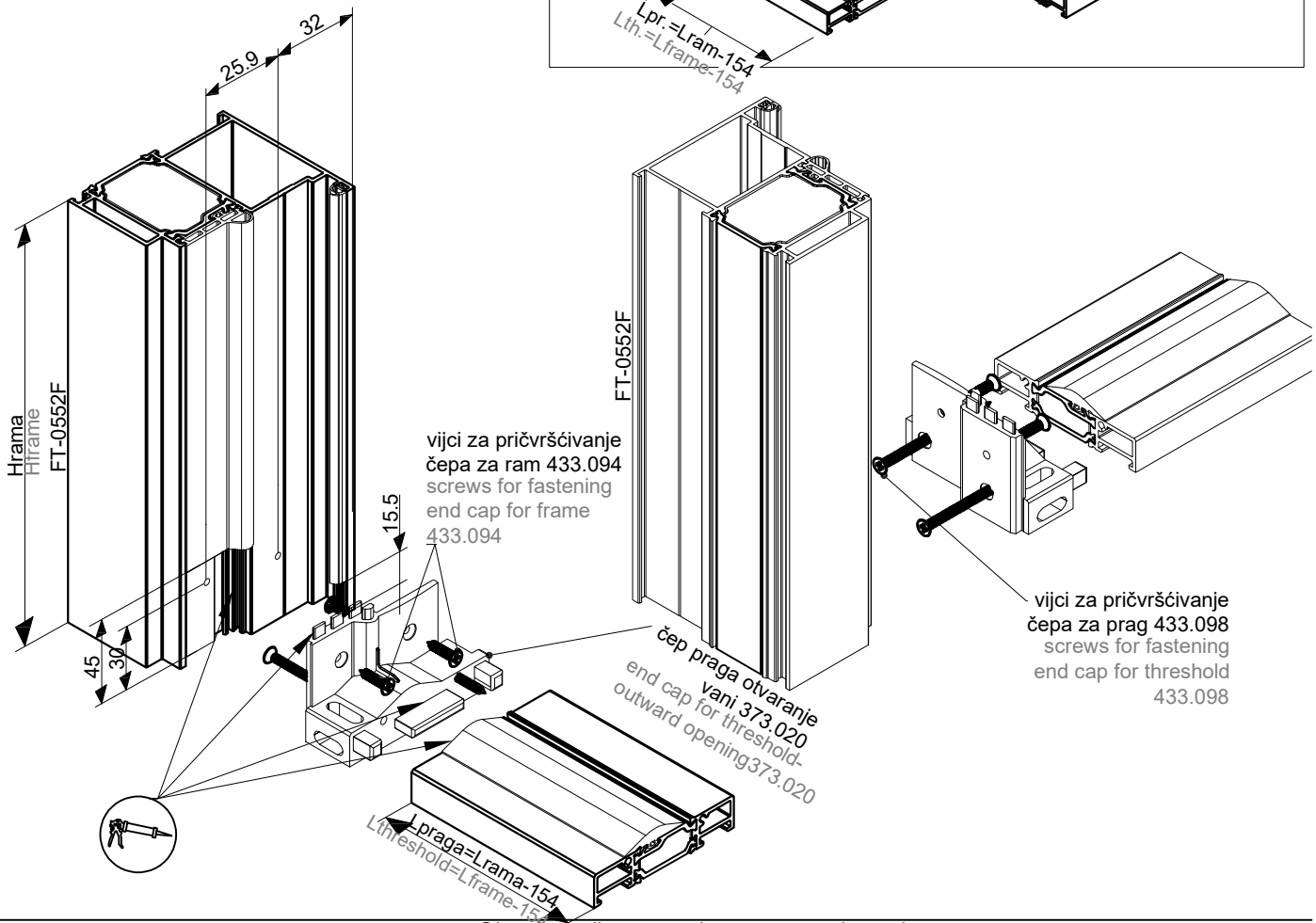


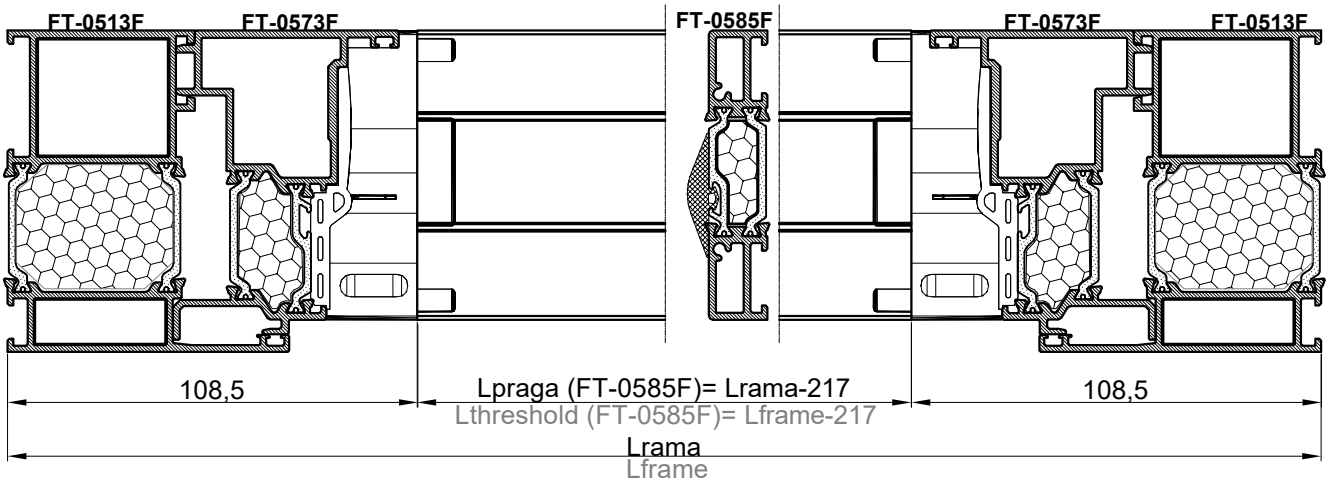

vijci za pričvršćivanje čepa za prag 433.099
screws for fastening end caps for threshold 433.099
čep praga otvaranje unutra 373.019
end cap for threshold-inward opening 373.019
vijci za pričvršćivanje čepa za ram 433.096
screws for fastening end cap for frame 433.096
Lpraga=Lrama-180
Lthreshold=Lframe-180

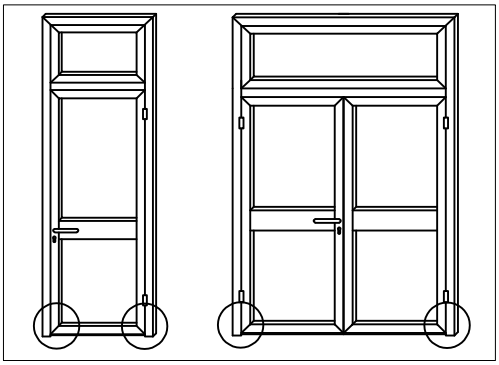

FT-0552F
FT-0585F
FT-0552F
Lpraga (FT-0585F)= Lrama-154
Lthresholda (FT-0585F)= Lframe-154
77
77
Lrama
Lframe

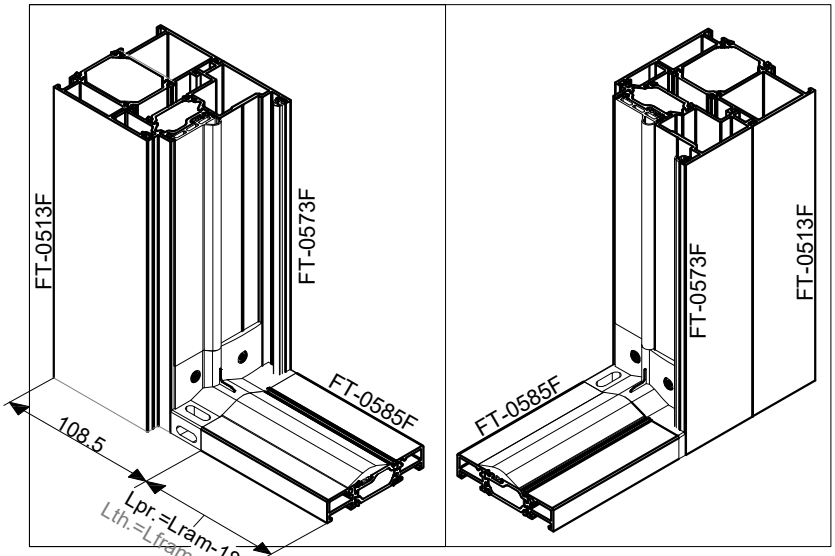


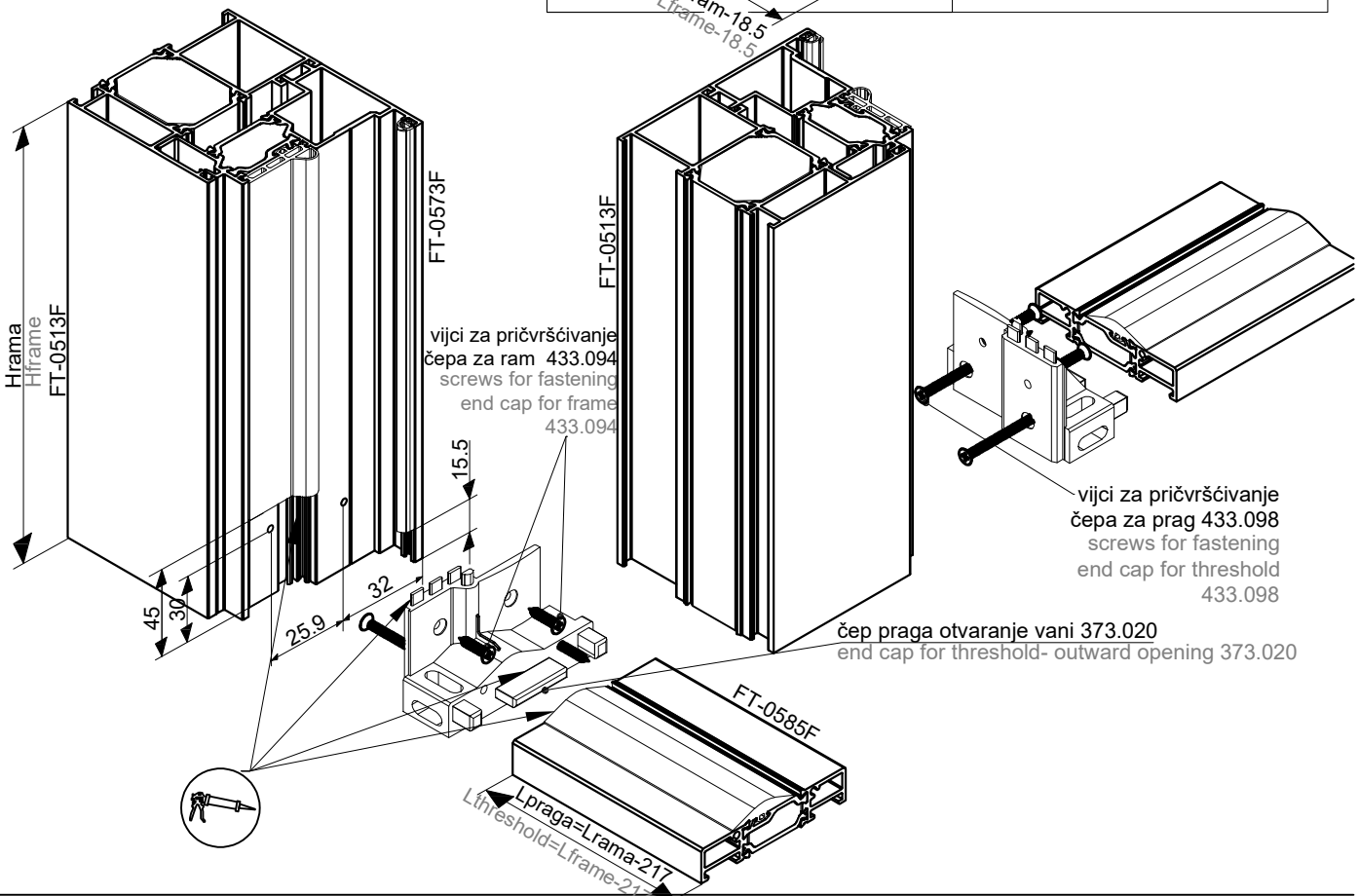

FT-0552F
FT-0585F
77
Lpr.=Lram-154
Lth.=Lframe-154
FT-0585F
FT-0552F

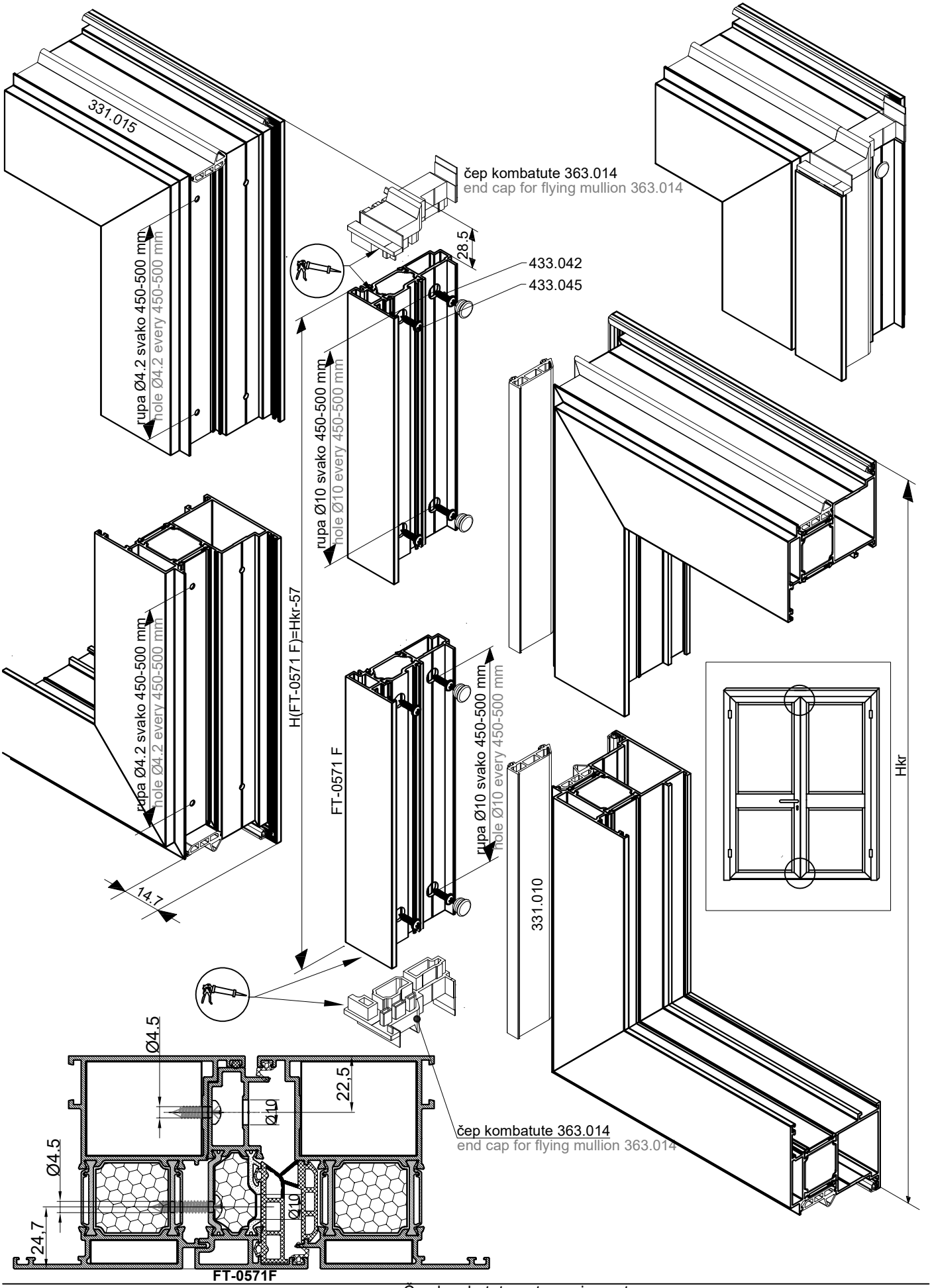

25.9
32
Hrama
Hframe
FT-0552F
45
30
15.5
vijci za pričvršćivanje čepa za ram 433.094
screws for fastening end cap for frame 433.094
FT-0552F
čep praga otvaranje vani 373.020
end cap for threshold-outward opening373.020
vijci za pričvršćivanje čepa za prag 433.098
screws for fastening end cap for threshold 433.098
Lpraga=Lrama-154
Lthreshold=Lframe-154

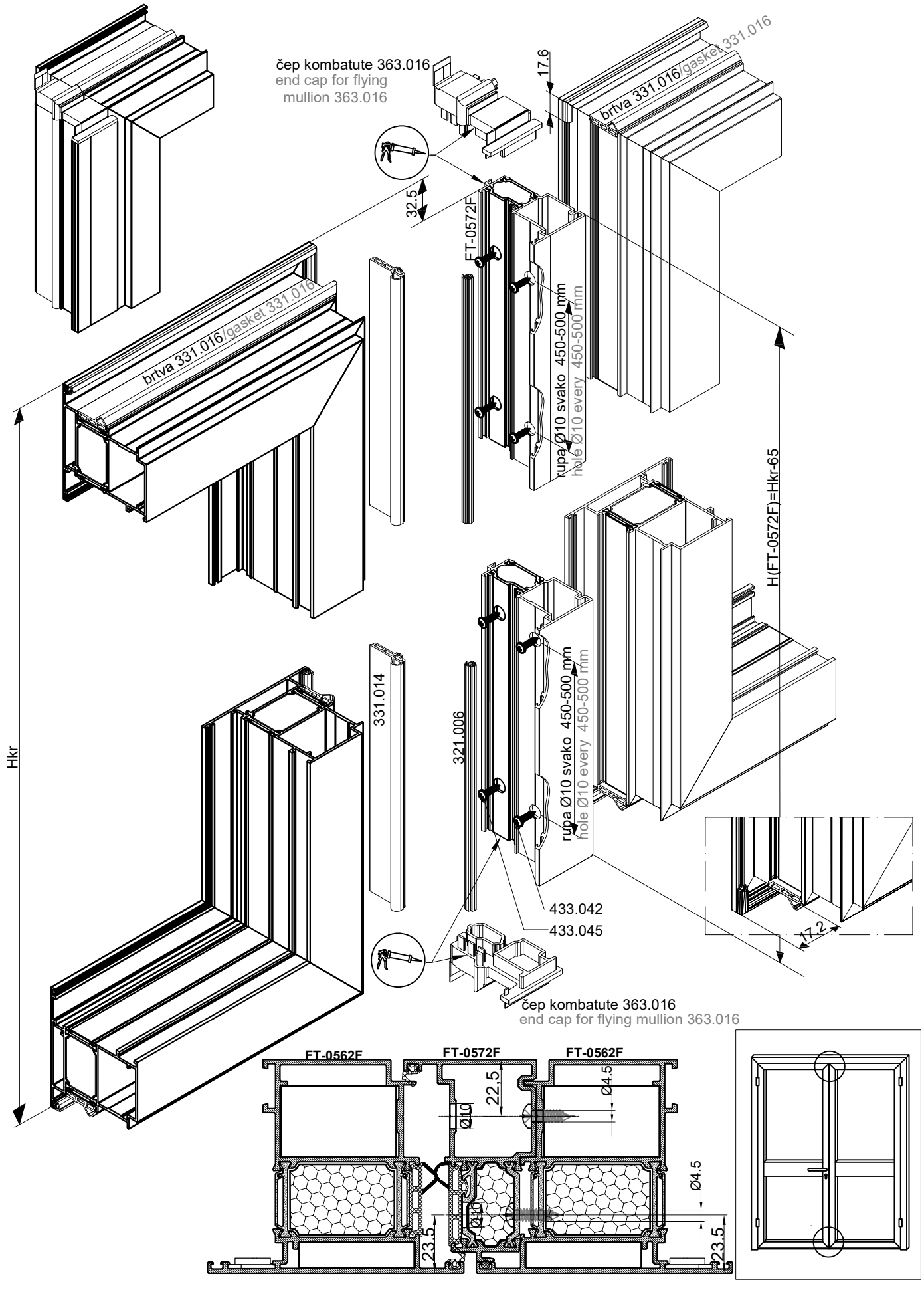

FT-0513F
FT-0573F
FT-0585F
FT-0573F
FT-0513F
108,5
Lpraga (FT-0585F)= Lrama-217
Lthreshold (FT-0585F)= Lframe-217
108,5
Lrama
Lframe

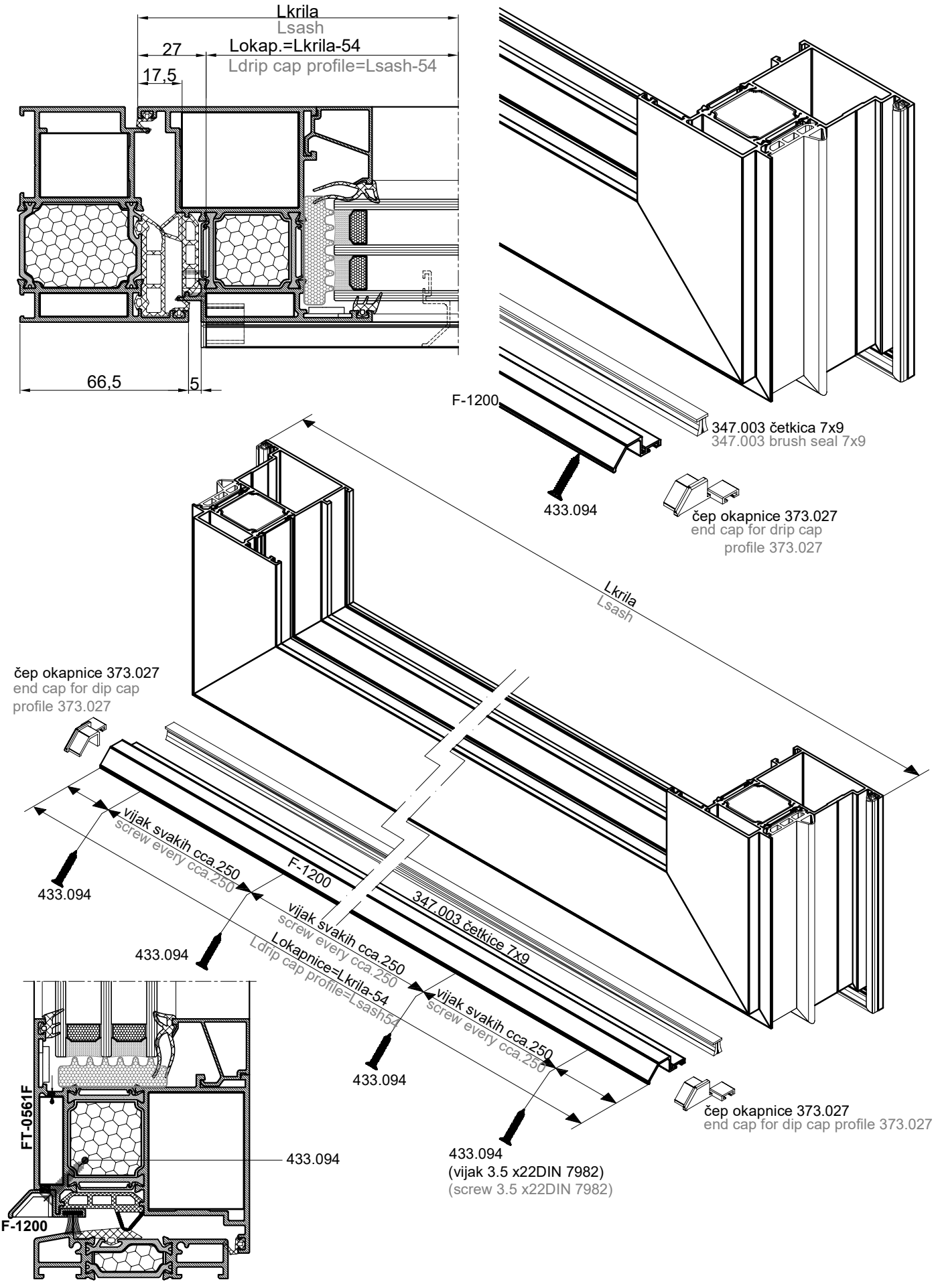


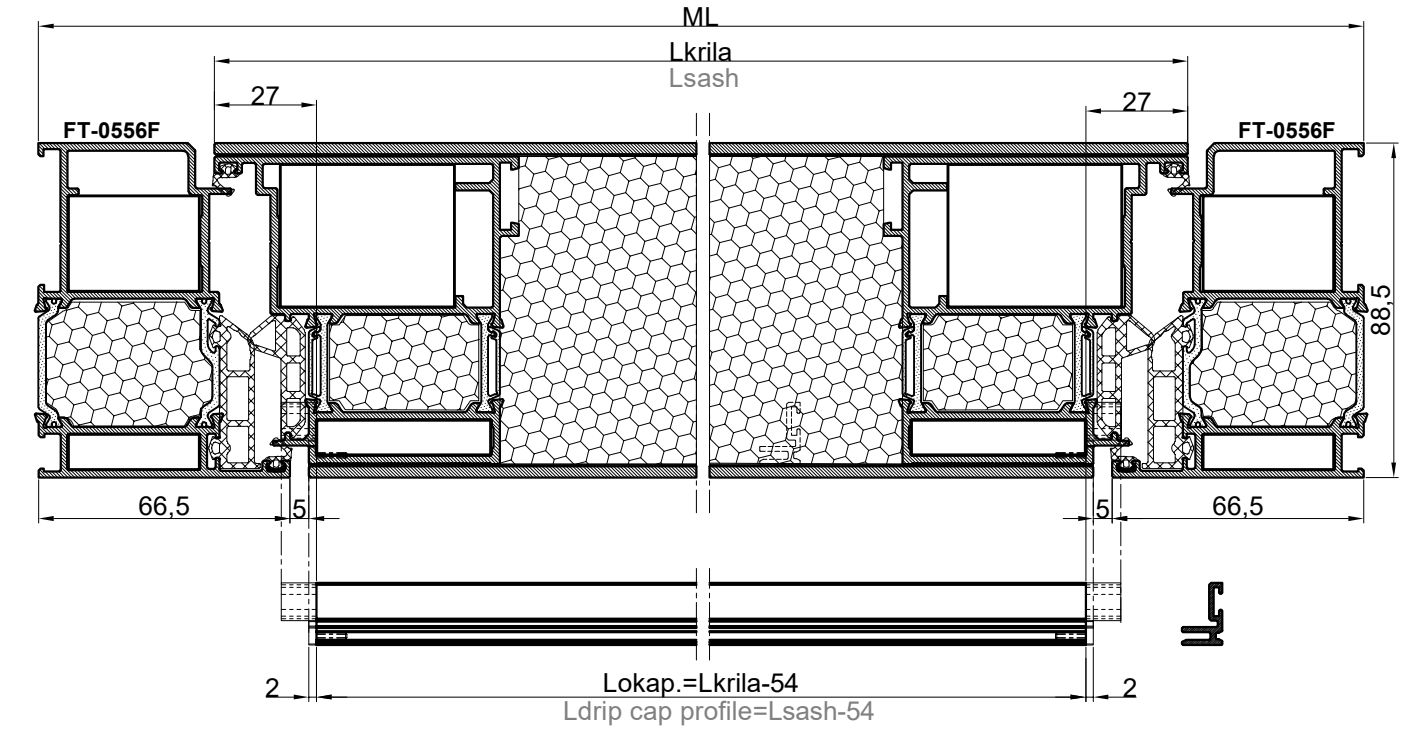

FT-0513F
FT-0573F
FT-0585F
108.5
Lpr.=Lram-18.5
Lth.=Lframe-18.5
FT-0585F
FT-0573F
FT-0513F

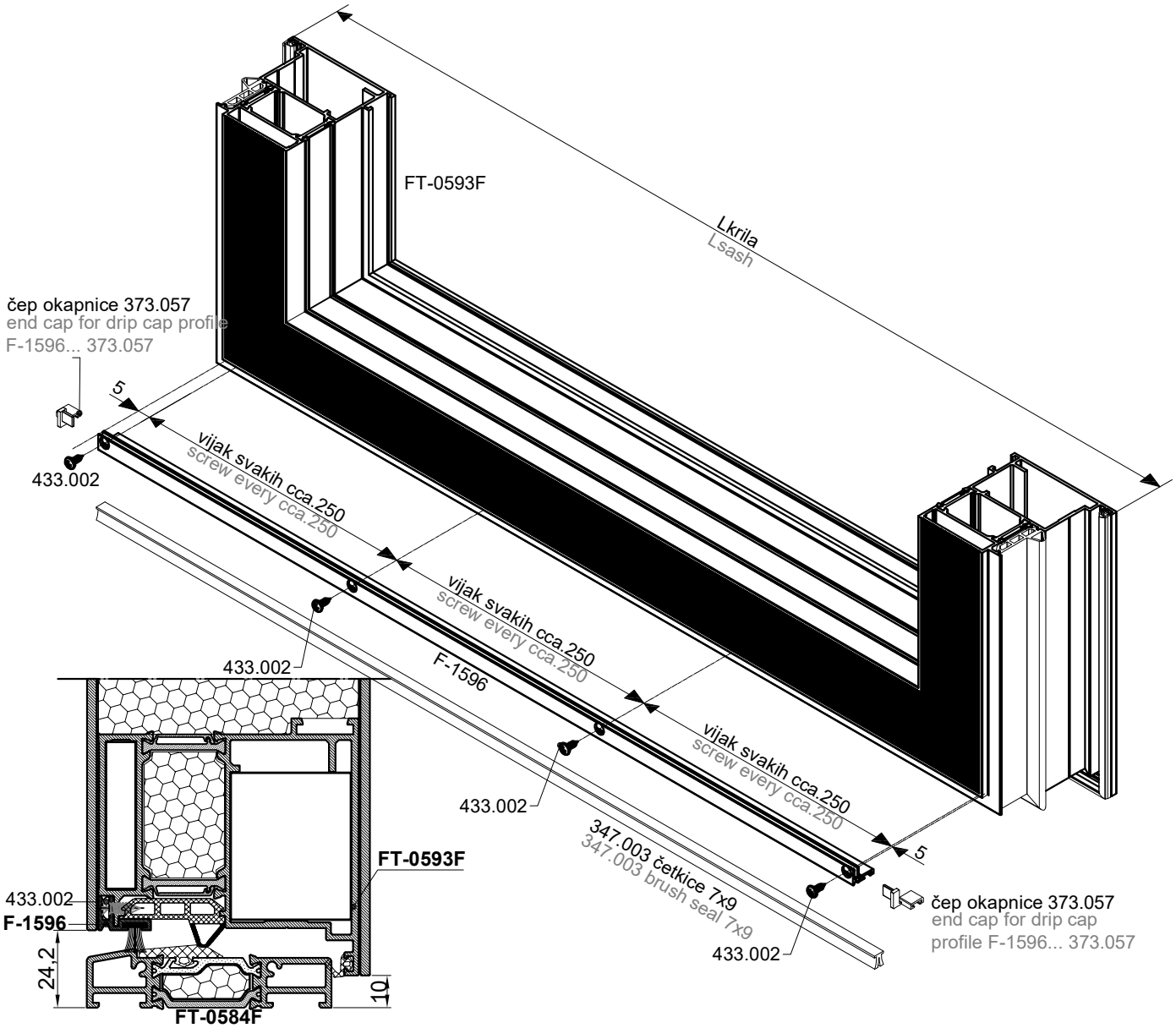

Hrama
Hframe
FT-0513F
FT-0573F
45
30
25.9
32
15.5
vijci za pričvršćivanje čepa za ram 433.094
screws for fastening end cap for frame 433.094
FT-0513F
vijci za pričvršćivanje čepa za prag 433.098
screws for fastening end cap for threshold 433.098
čep praga otvaranje vani 373.020
end cap for threshold- outward opening 373.020
FT-0585F
Lpraga=Lrama-217
Lthreshold=Lframe-217


331.015
rupa Ø4.2 svako 450-500 mm
hole Ø4.2 every 450-500 mm
čep kombatute 363.014
end cap for flying mullion 363.014
28.5
433.042
433.045
rupa Ø10 svako 450-500 mm
hole Ø10 every 450-500 mm
H(FT-0571 F)=Hkr-57
rupa Ø4.2 svako 450-500 mm
hole Ø4.2 every 450-500 mm
14.7
FT-0571 F
rupa Ø10 svako 450-500 mm
hole Ø10 every 450-500 mm
331.010
Hkr
Ø4.5
22,5
Ø10
Ø4.5
Ø10
24.7
FT-0571F
čep kombatute 363.014
end cap for flying mullion 363.014

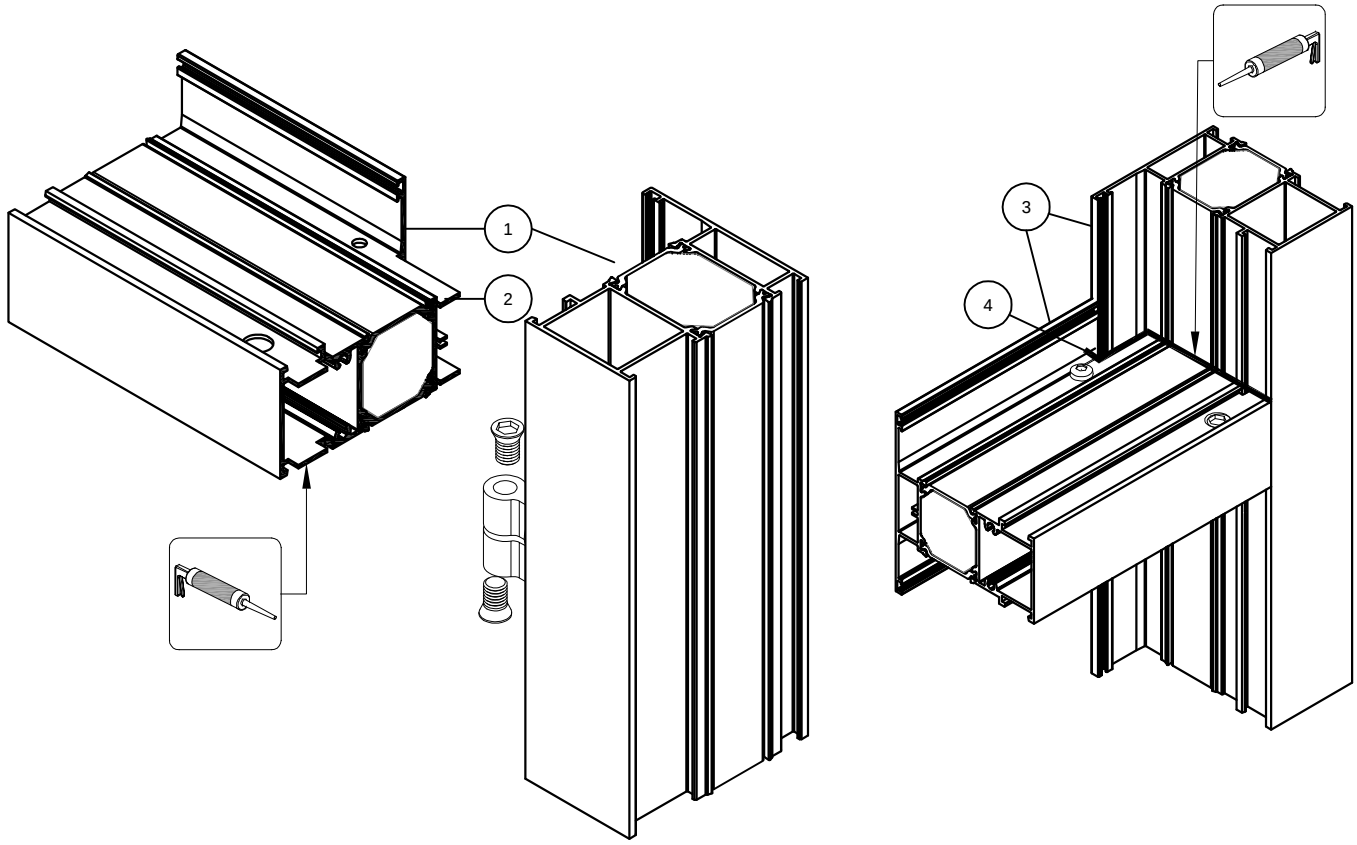

čep kombatute 363.016
end cap for flying mullion 363.016
17.6
brtva 331.016/gasket 331.016
32.5
FT-0572F
rupa Ø10 svako 450-500 mm
hole Ø10 every 450-500 mm
brtva 331.016/gasket 331.016
H(FT-0572F)=Hkr-65
Hkr
331.014
321.006
rupa Ø10 svako 450-500 mm
hole Ø10 every 450-500 mm
433.042
433.045
17.2
čep kombatute 363.016
end cap for flying mullion 363.016
FT-0562F
FT-0572F
FT-0562F
22.5
Ø10
Ø4.5
Ø4.5
Ø10
23.5
23.5


Lkrila
Lsash
27
Lokap.=Lkrila-54
Ldrip cap profile=Lsash-54
17,5
66,5
5
F-1200
347.003 četkica 7x9
347.003 brush seal 7x9
433.094
čep okapnice 373.027
end cap for drip cap profile 373.027
Lkrila
Lsash
čep okapnice 373.027
end cap for dip cap profile 373.027
vijak svakih cca.250
screw every cca.250
433.094
F-1200
347.003 četkice 7x9
433.094
vijak svakih cca.250
screw every cca.250
Lokapnice=Lkrila-54
Ldrip cap profile=Lsash54
433.094
vijak svakih cca.250
screw every cca.250
čep okapnice 373.027
end cap for dip cap profile 373.027
FT-0561F
433.094
F-1200
433.094
(vijak 3.5 x22DIN 7982)
(screw 3.5 x22DIN 7982)


ML
Lkrila
Lsash
27
27
FT-0556F
FT-0556F
88,5
66,5
5
5
66,5
2
Lokap.=Lkrila-54
Ldrip cap profile=Lsash-54
2


FT-0593F
Lkrila
Lsash
čep okapnice 373.057
end cap for drip cap profile
F-1596... 373.057
5
433.002
vijak svakih cca.250
screw every cca.250
vijak svakih cca.250
screw every cca.250
vijak svakih cca.250
screw every cca.250
433.002
F-1596
433.002
347.003 četkice 7x9
347.003 brush seal 7x9
433.002
5
čep okapnice 373.057
end cap for drip cap
profile F-1596... 373.057
FT-0593F
433.002
F-1596
24.2
10
FT-0584F

SPAJANJE PROFILA POMOĆU VEZNIKA
CONNECTING OF PROFILES BY USING CONNECTING ELEMENT -(T-BRACKET)



POSTUPAK SPAJANJA PROFILA :

1. Sve površine koje se spajaju-rezove očistiti i odmastiti odgovarajućim sredstvom /npr. "Henkel" - *Teroson VR 20 ili Teroson FL+* /.
2. Premazati sve površine koje se spajaju ljepilom za metal /npr. "Henkel" - *Teroson MS 939* /.
3. Profile s veznicima izravnati i spojiti
4. **Nakon spajanja profila, sve spojeve profila ispuniti ljepilom za metal** /npr. "Henkel" - *Teroson MS 939* /.
5. Dio ljepila koji iscuri između rezova očistiti sredstvom za čišćenje i odmašćivanje /npr. "Henkel" - *Teroson VR 20 ili Teroson FL+* /.

NAPOMENA:

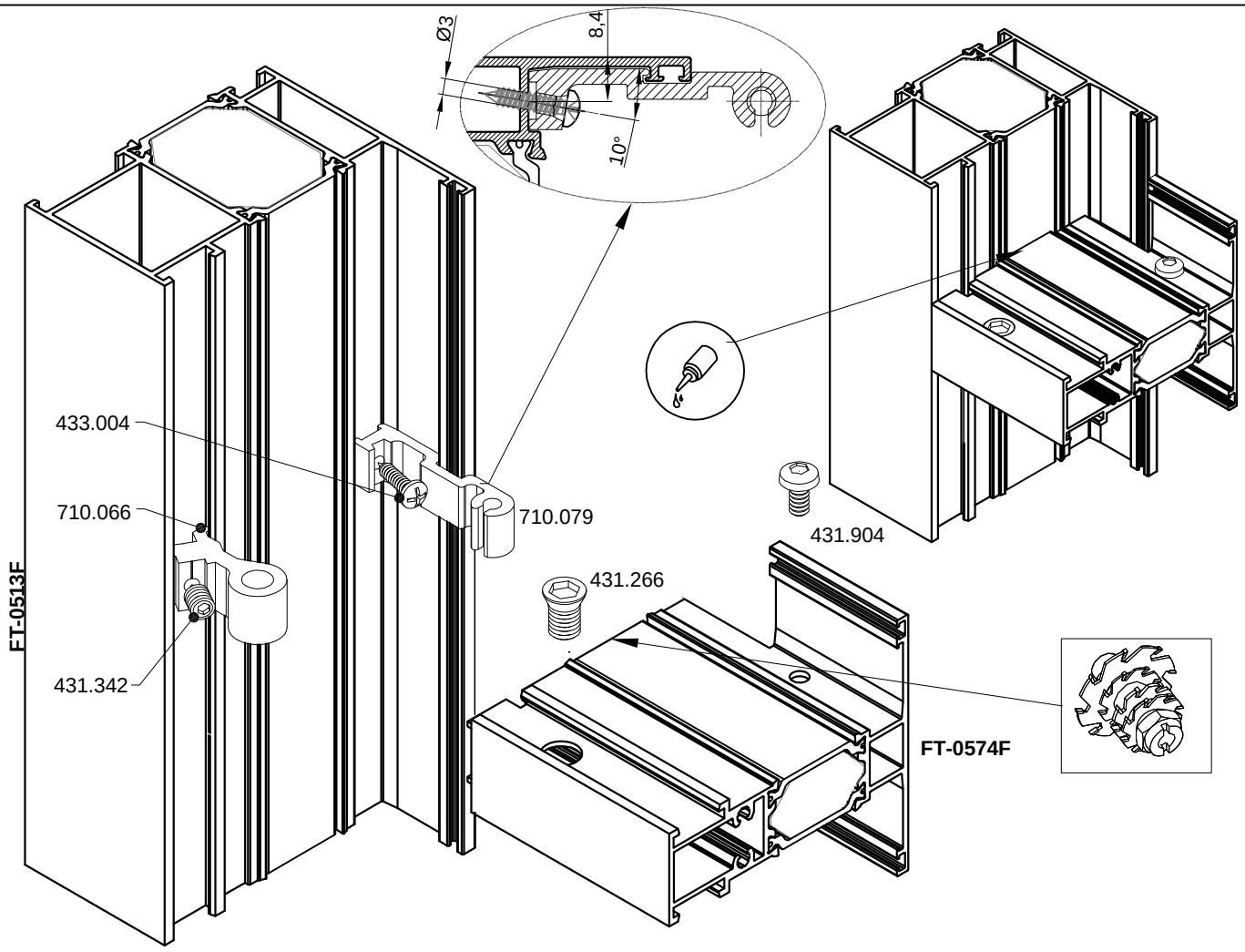
Lijepljenjem rezova, kao i svih spojeva profila sa ljepilima za metal, osigurava se potrebna zrako i vodonepropusnosti spoja kao i dodatna mehanička čvrstoća spoja.

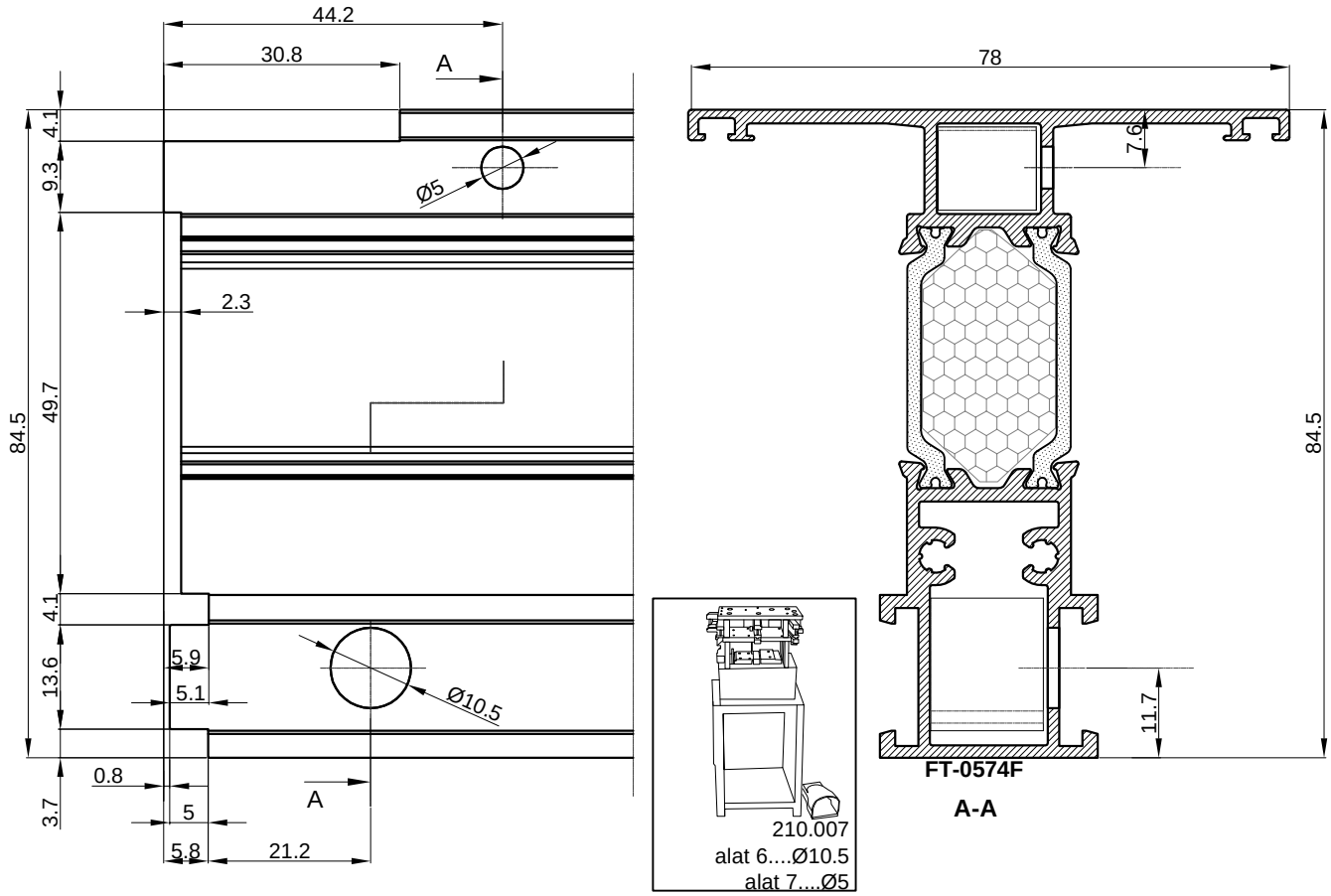
PROFILE CONNECTION PROCEDURE:

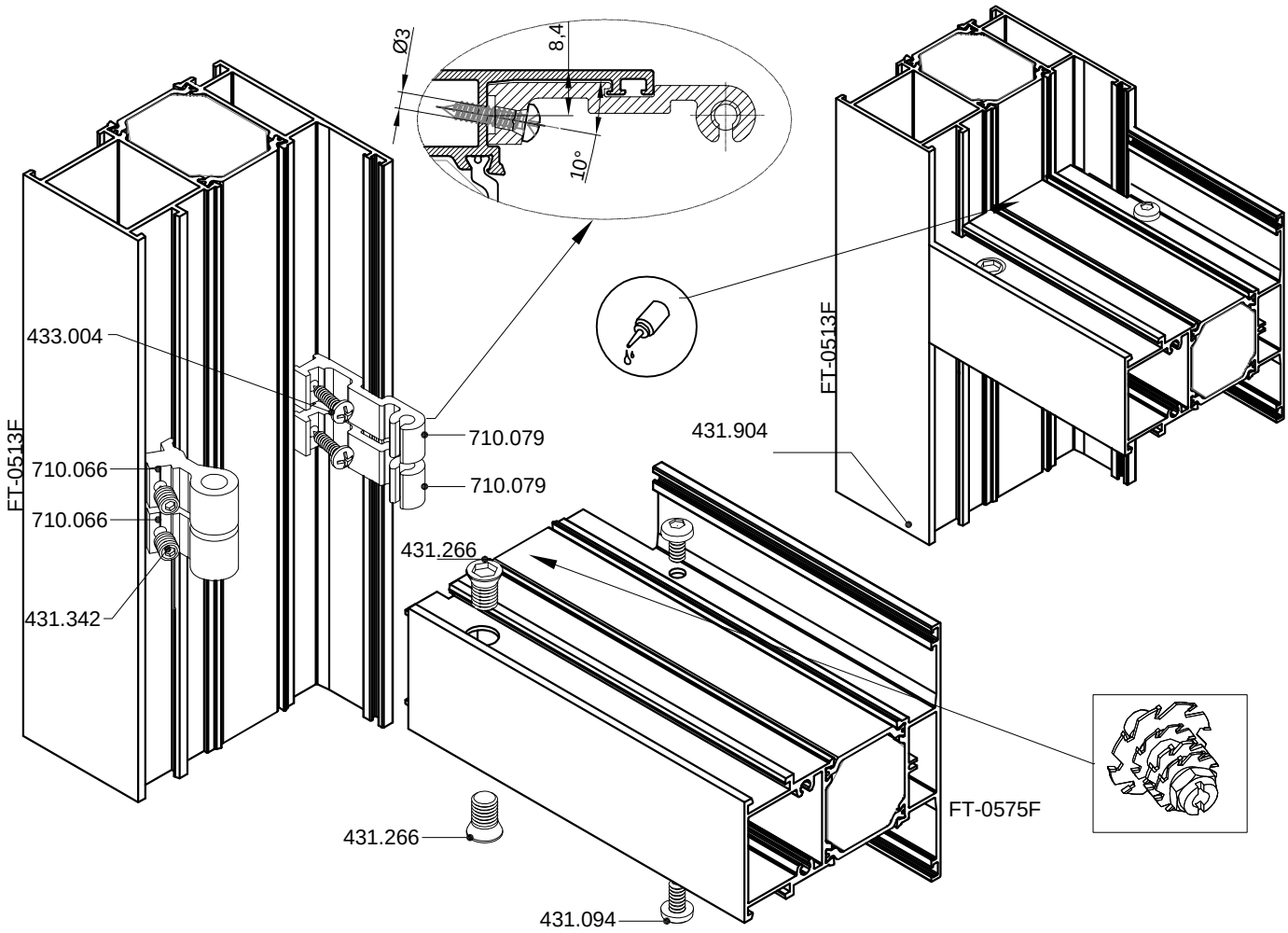
1. Clean and degrease all connecting surfaces with suitable products /e.g. "Henkel" - *Teroson VR 20 ili Teroson FL+* /.
2. Smear connecting all surfaces with metal glue /e.g. "Henkel" - *Teroson MS 939* /.
3. Level profiles with connecting element (T-bracket) and connect
4. **After joining the profile, all profile joints must be filled with metal glue** /e.g. "Henkel" - *Teroson MS 939* /.
5. Leaked glue that comes from the joints remove with cleaning and degreasing products /e.g. "Henkel" - *Teroson VR 20 ili Teroson FL+* /.

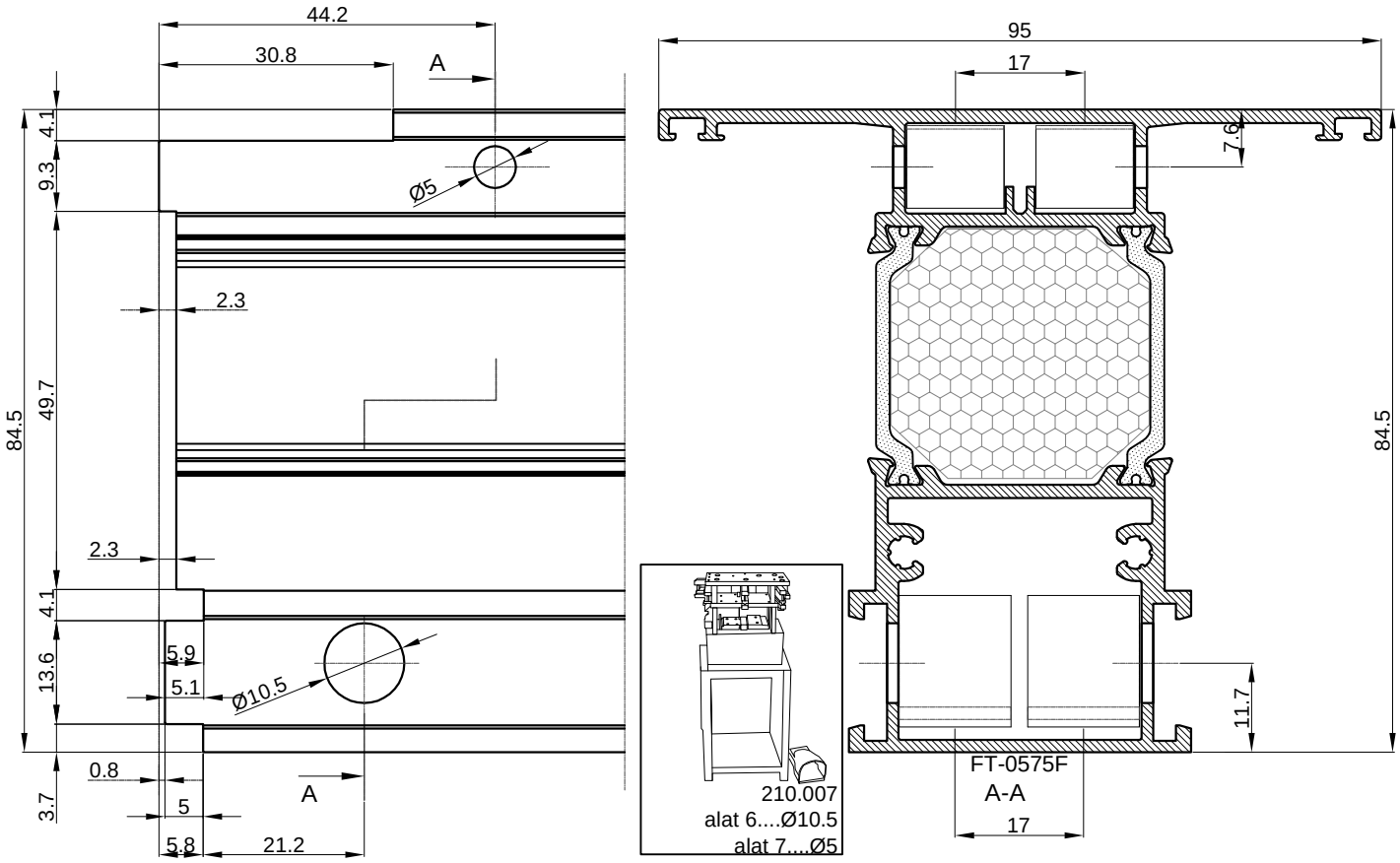
NOTE:

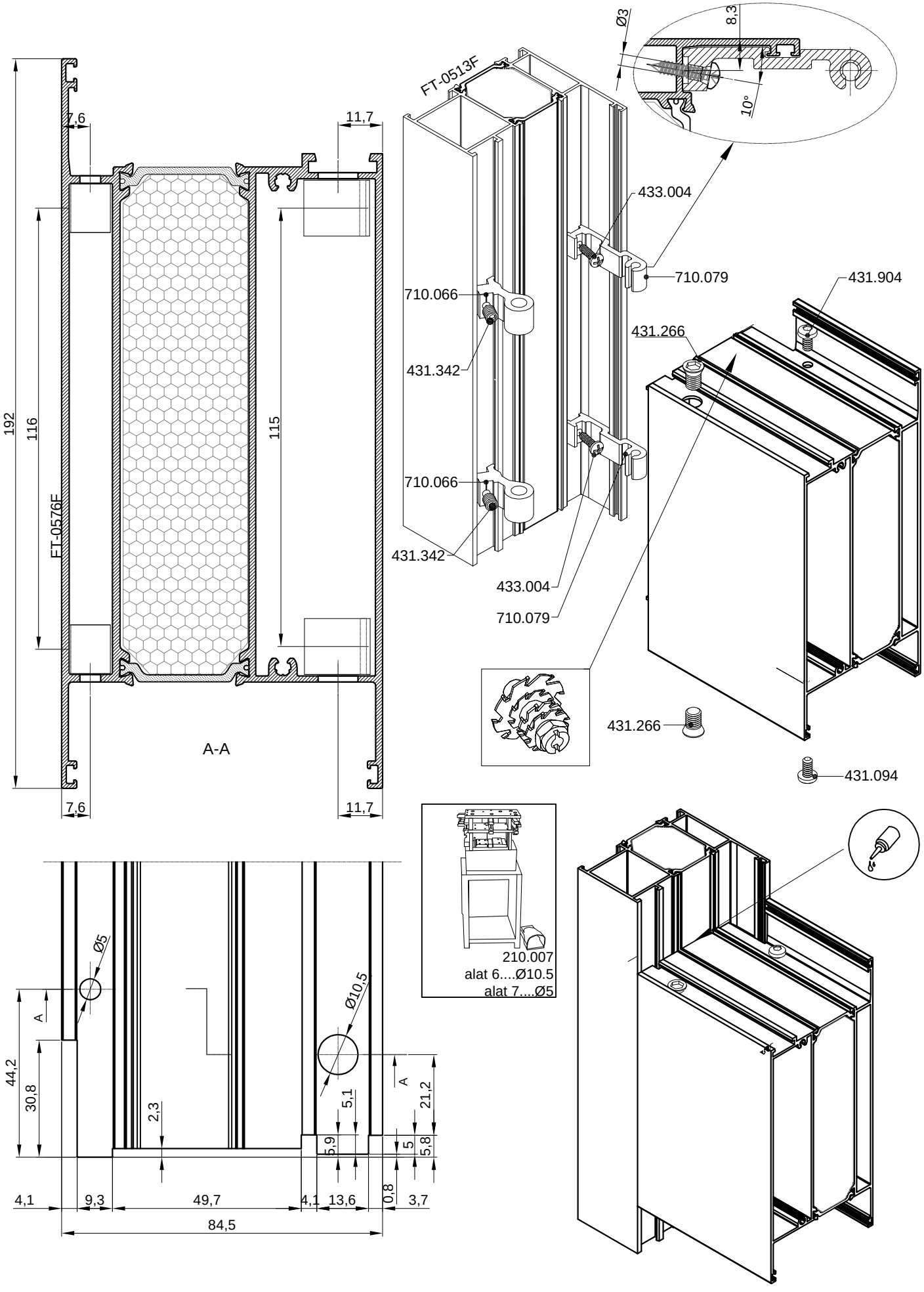
By gluing the profile, as well as all profile joints with a metal glue, necessary air and water tightness of the joint as well as additional mechanical properties is ensured.

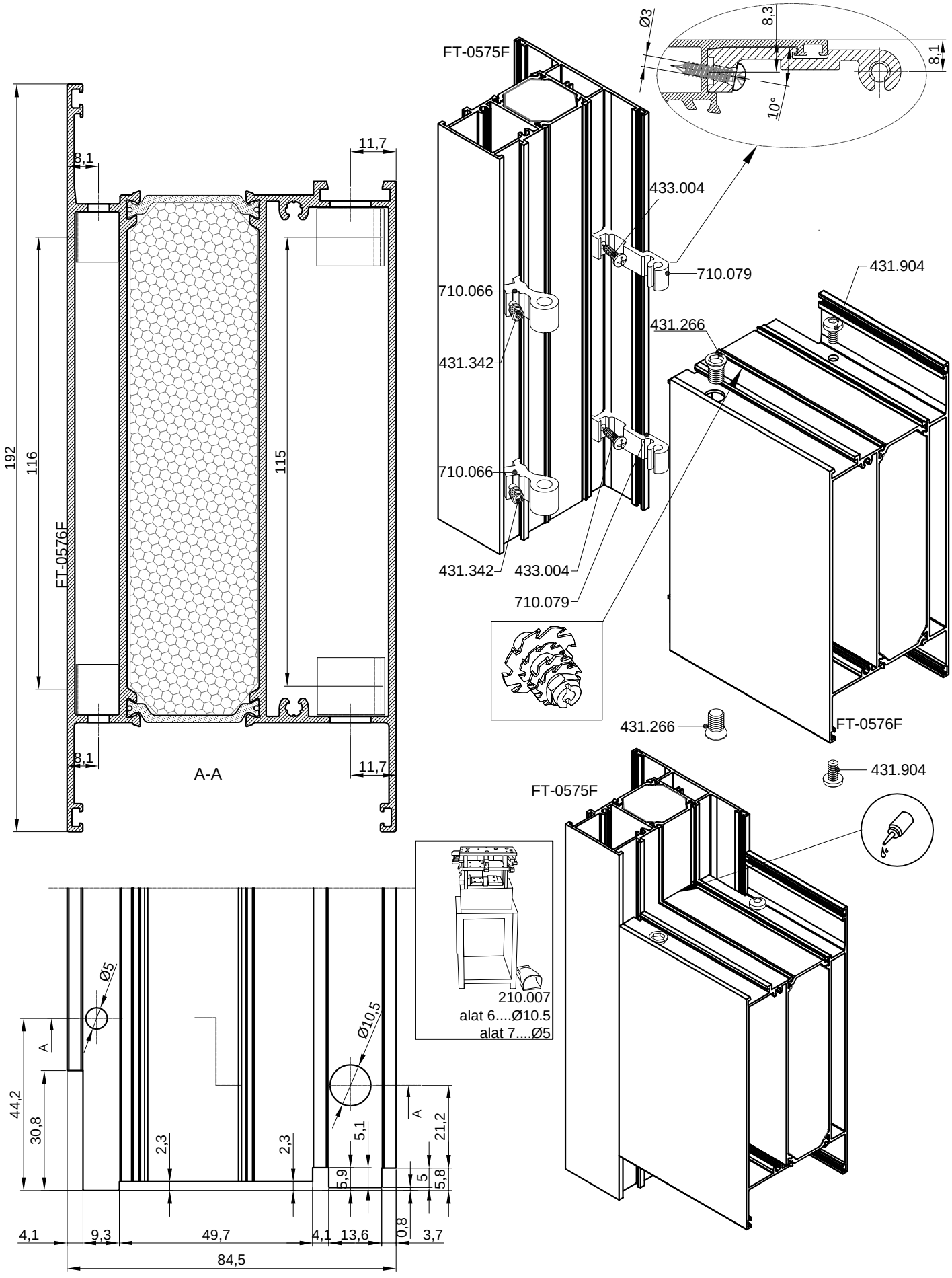

Ø3
8.4
10°
433.004
710.066
710.079
431.342
FT-0513F
431.904
431.266
FT-0574F

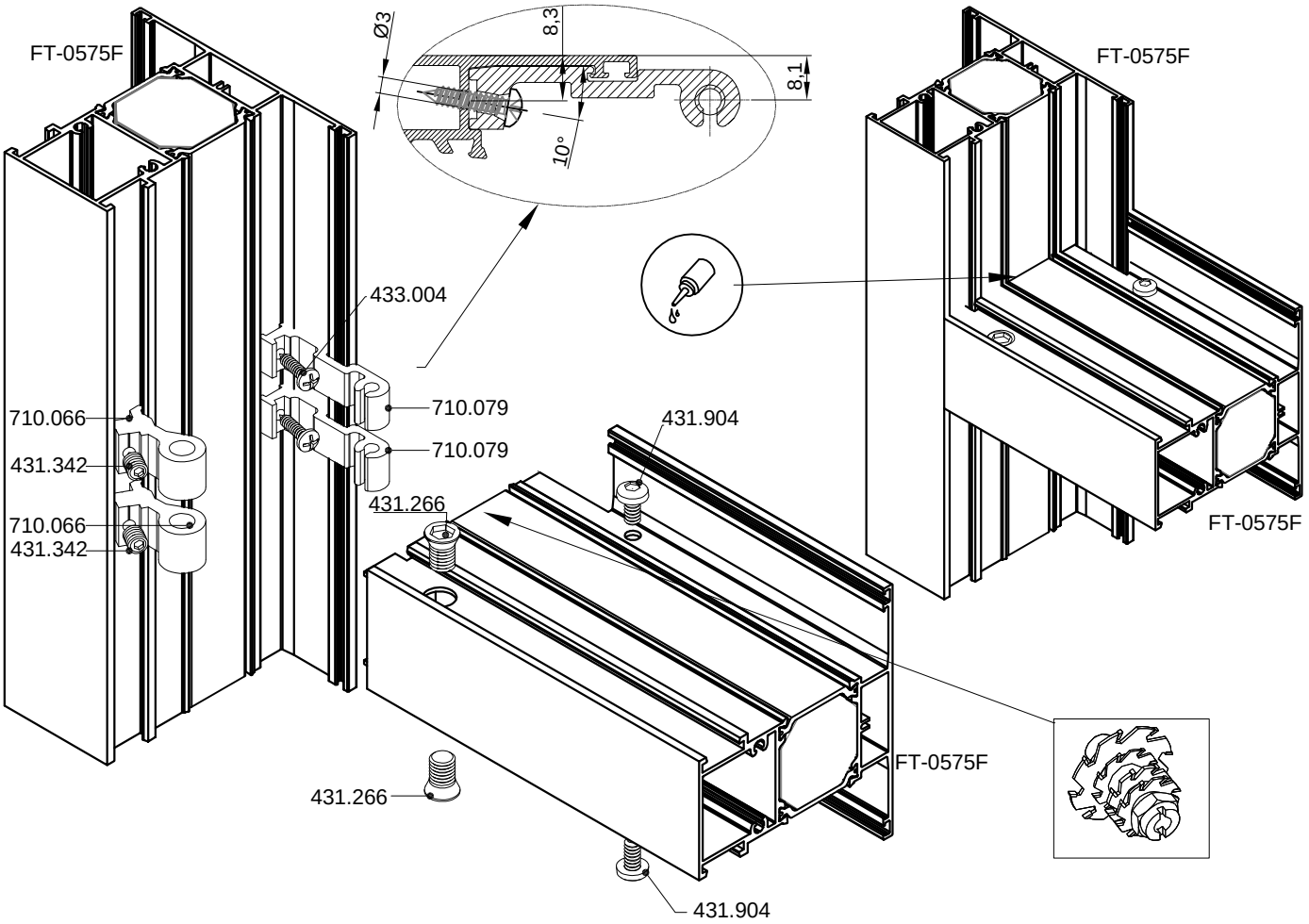

44.2
30.8
A
4.1
9.3
Ø5
2.3
84.5
49.7
4.1
13.6
5.9
5.1
Ø10.5
0.8
5
5.8
21.2
3.7
A
78
7.6
84.5
11.7
FT-0574F
A-A
210.007
alat 6....Ø10.5
alat 7....Ø5

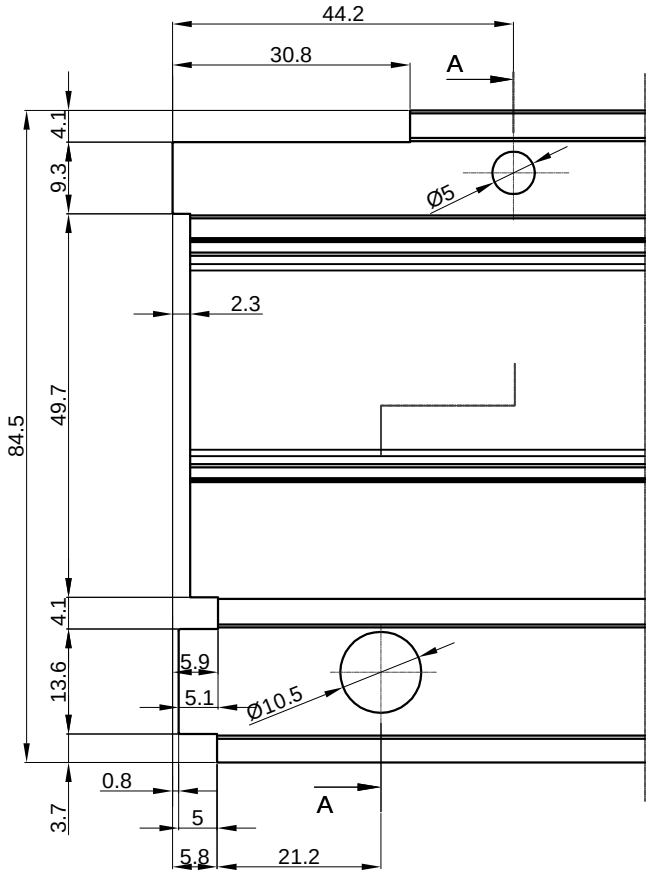

Ø3
8.4
10°
433.004
FT-0513F
710.066
710.066
431.342
710.079
710.079
FT-0513F
431.904
431.266
431.266
431.094
FT-0575F

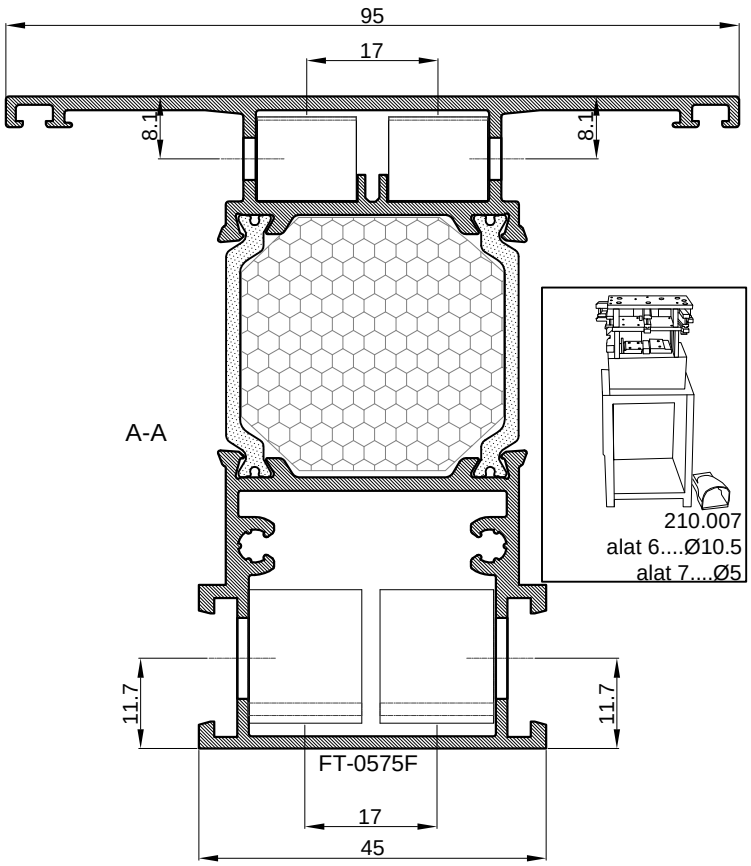

44.2
30.8
A
4.1
9.3
Ø5
2.3
84.5
49.7
2.3
4.1
13.6
5.9
5.1
Ø10.5
0.8
5
5.8
21.2
3.7
A
95
17
7.6
84.5
11.7
FT-0575F
A-A
17
210.007
alat 6....Ø10.5
alat 7....Ø5

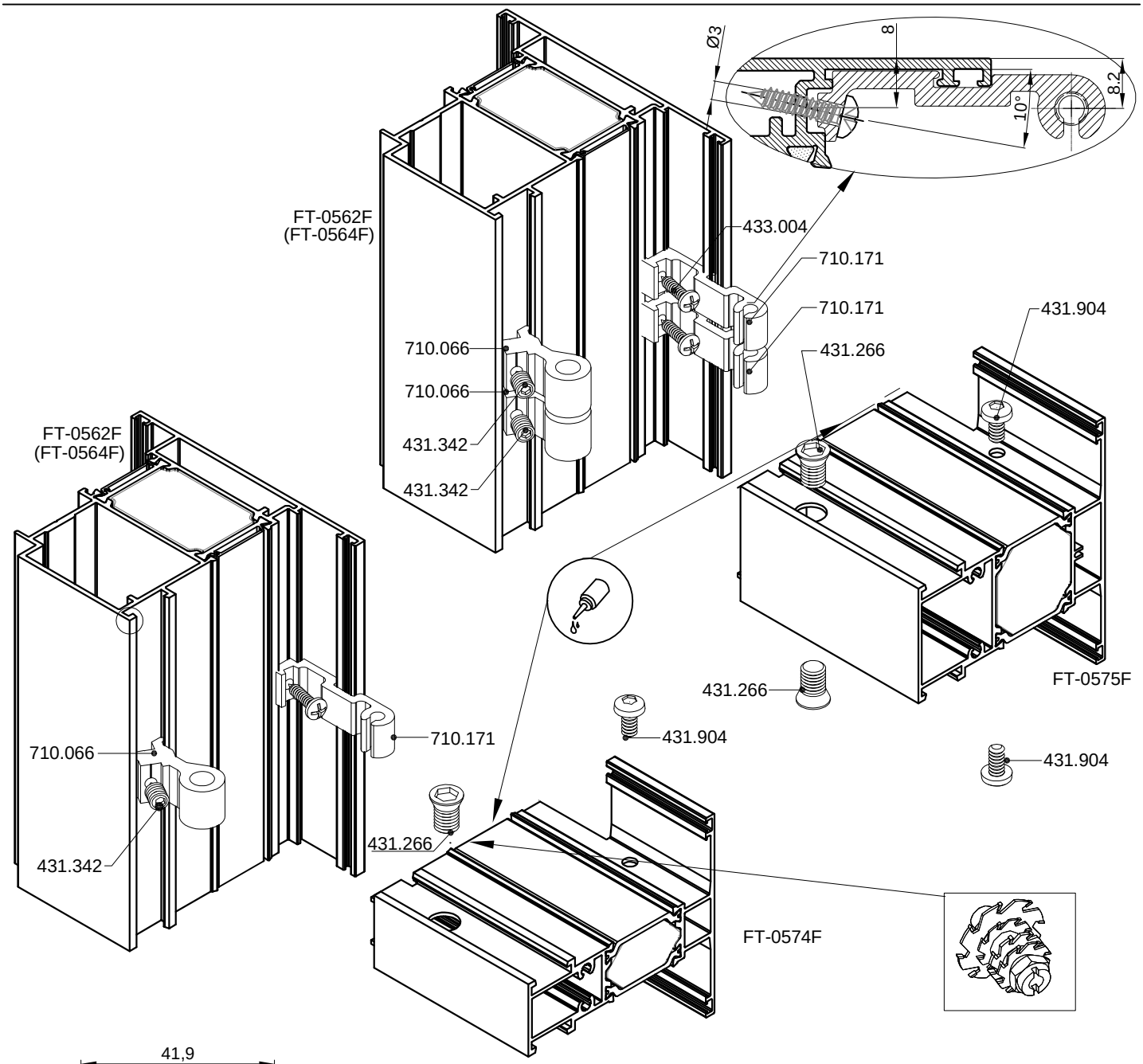

FT-0513F
Ø3
8,3
10°
433.004
710.079
431.904
710.066
431.266
431.342
710.066
431.342
433.004
710.079
431.266
431.094
7,6
11,7
192
116
115
FT-0576F
A-A
7,6
11,7
210.007
alat 6....Ø10.5
alat 7....Ø5
Ø5
Ø10,5
A
44,2
30,8
2,3
5,1
A
21,2
5,9
5
5,8
4,1
9,3
49,7
4,1
13,6
0,8
3,7
84,5

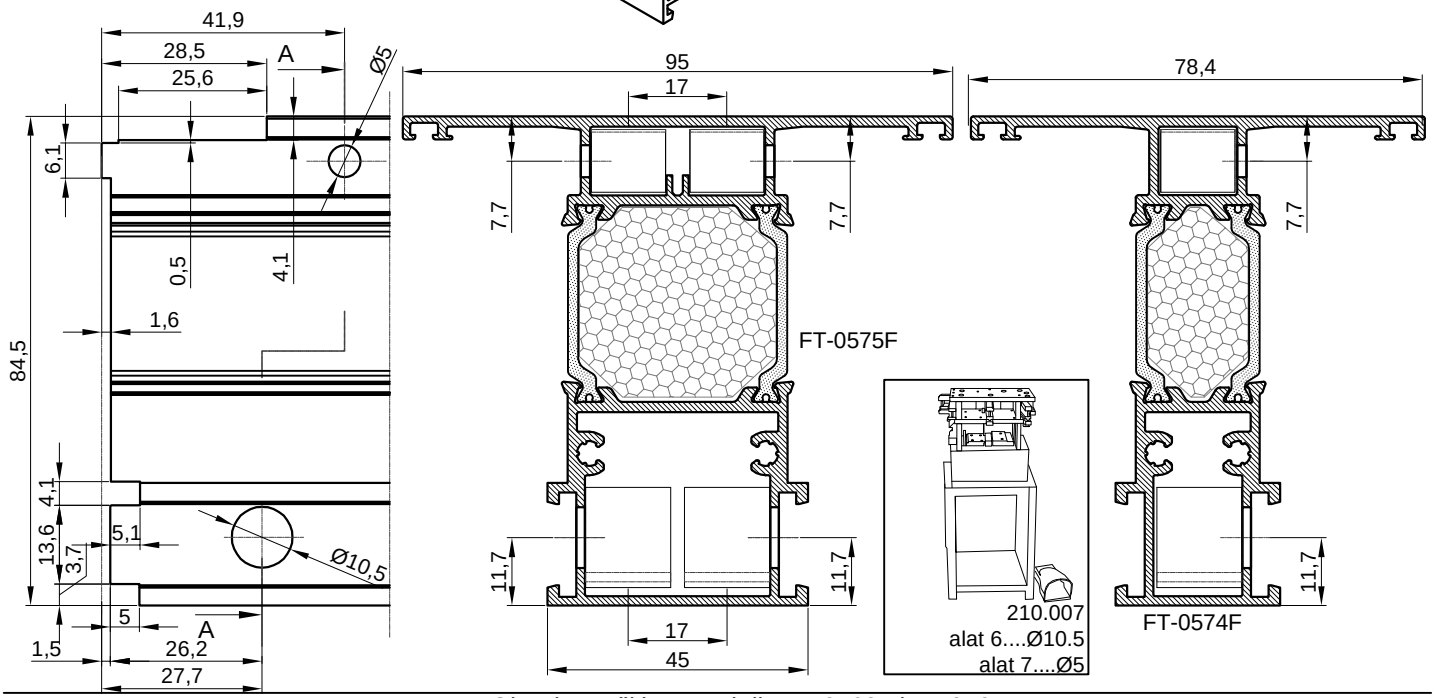

FT-0575F
Ø3
8,3
8,1
10°
433.004
710.079
431.904
710.066
431.266
431.342
710.066
431.342
433.004
710.079
FT-0576F
431.266
431.904
FT-0575F
210.007
alat 6....Ø10.5
alat 7....Ø5
192
116
115
FT-0576F
8,1
11,7
A-A
Ø5
Ø10,5
A
44,2
30,8
2,3
2,3
5,1
5,9
5
5,8
21,2
4,1
9,3
49,7
4,1
13,6
0,8
3,7
84,5

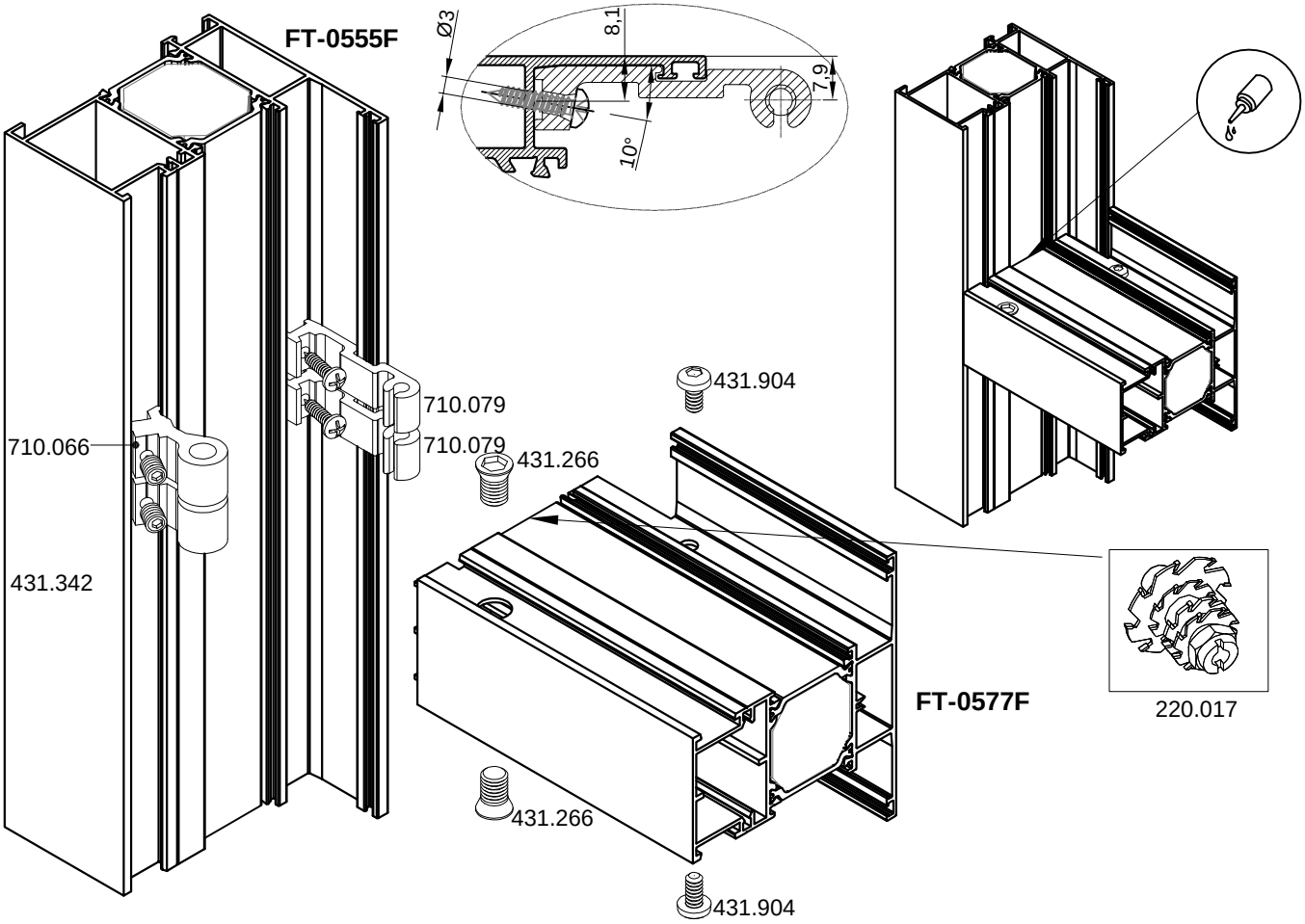

FT-0575F
Ø3
8,3
8,1
10°
433.004
710.066
431.342
710.066
431.342
710.079
710.079
431.266
431.904
FT-0575F
FT-0575F
431.266
431.904

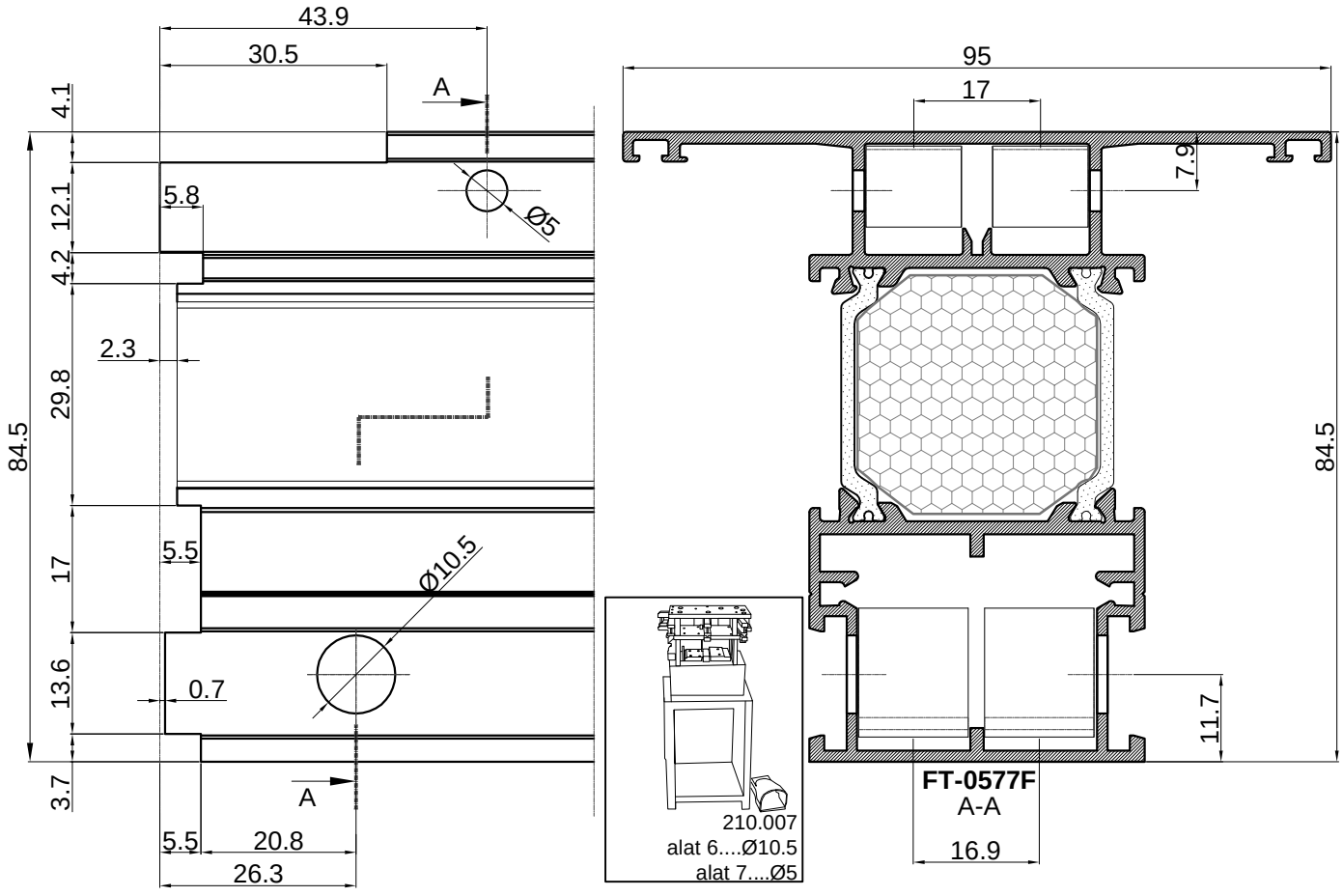

44.2
30.8
A
4.1
9.3
Ø5
2.3
84.5
49.7
4.1
13.6
5.9
5.1
Ø10.5
0.8
3.7
5
5.8
21.2
A

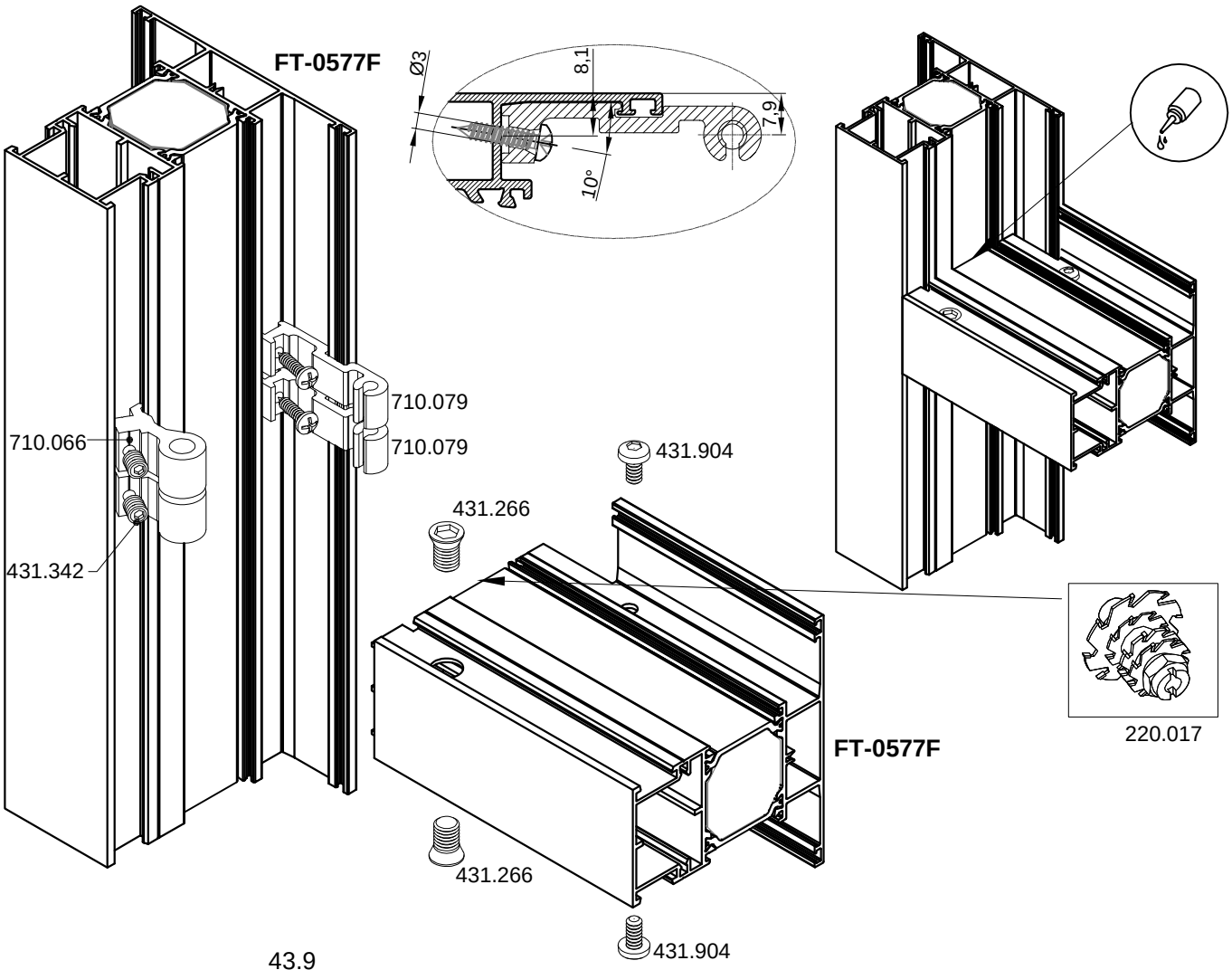

95
17
8.1
8.1
A-A
210.007
alat 6....Ø10.5
alat 7....Ø5
11.7
11.7
FT-0575F
17
45

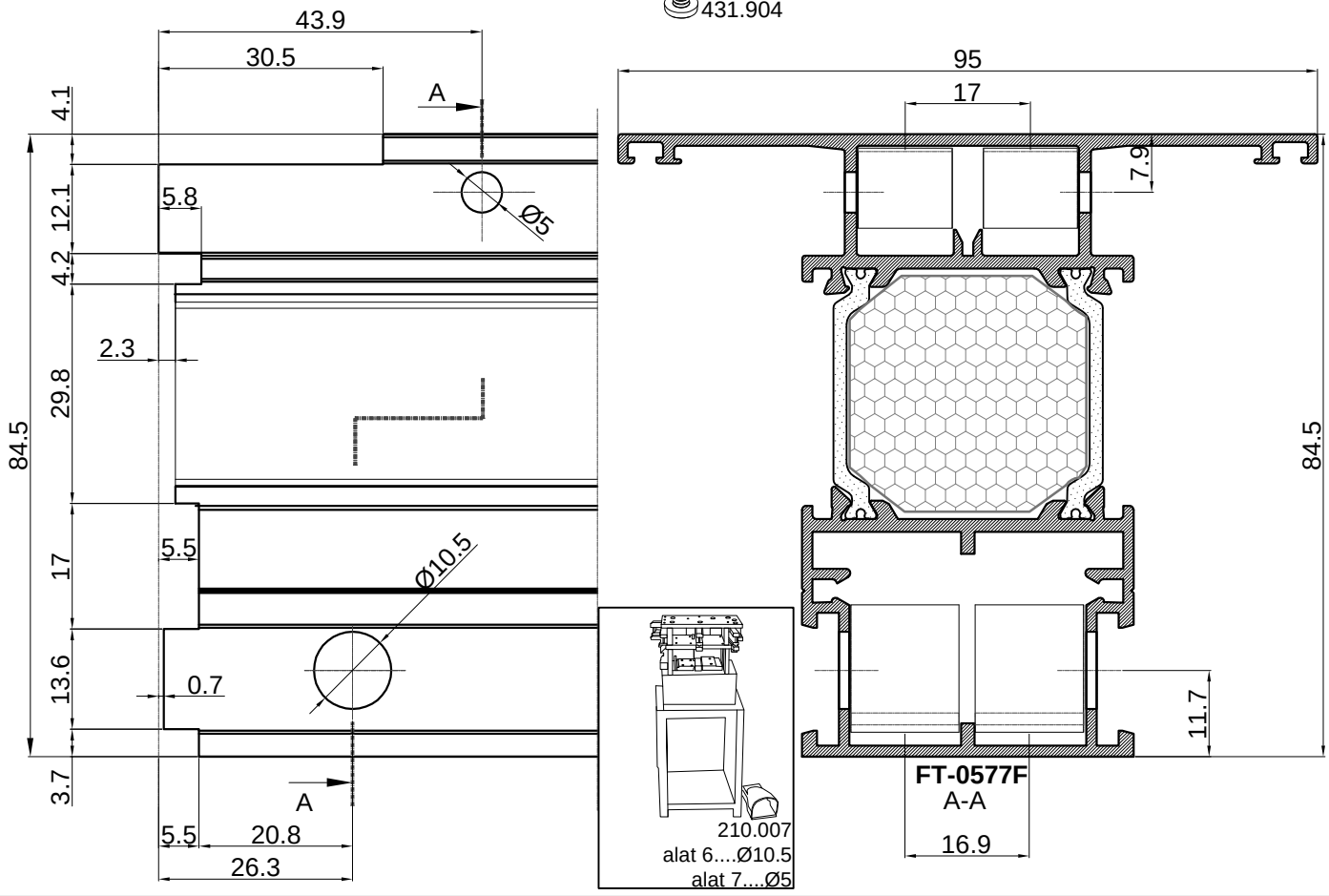

Ø3
8
8,2
10°
FT-0562F
(FT-0564F)
433.004
710.171
710.171
710.066
710.066
431.342
431.342
431.904
431.266
FT-0575F
431.266
431.904
431.904
710.171
710.066
431.342
431.266
FT-0574F

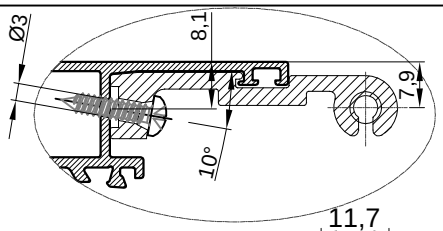

41,9
28,5
25,6
A
Ø5
6,1
0,5
4,1
1,6
84,5
4,1
13,6
3,7
5,1
Ø10,5
5
A
1,5
26,2
27,7
95
17
78,4
7,7
7,7
7,7
FT-0575F
11,7
11,7
11,7
17
45
210.007
alat 6....Ø10.5
alat 7....Ø5
FT-0574F

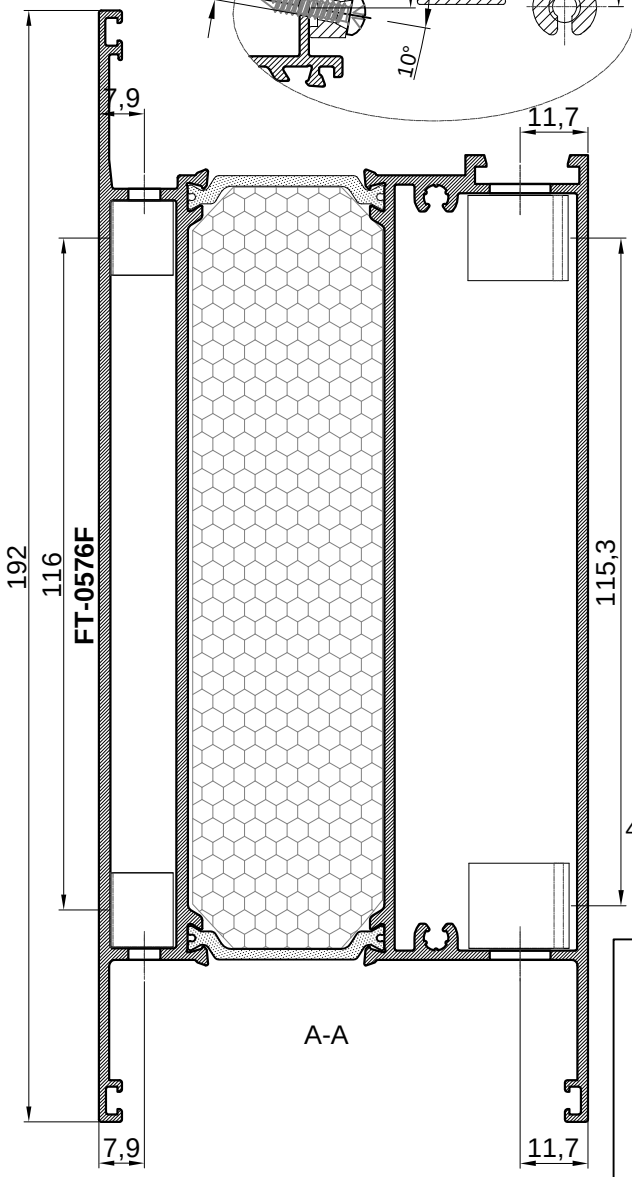

FT-0555F
Ø3
8.1
7.9
10°
710.066
710.079
710.079
431.904
431.266
431.342
431.266
431.904
FT-0577F
220.017

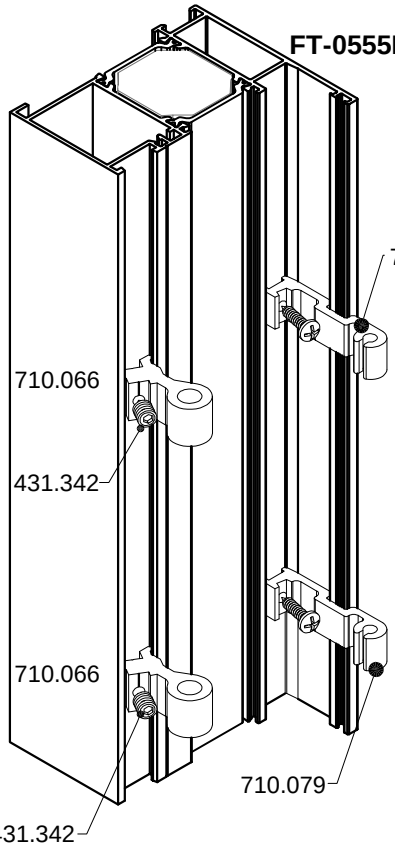

43.9
30.5
A
4.1
12.1
4.2
29.8
17
13.6
3.7
84.5
5.8
Ø5
2.3
5.5
Ø10.5
0.7
A
5.5
20.8
26.3
95
17
7.9
84.5
11.7
FT-0577F
A-A
16.9
210.007
alat 6....Ø10.5
alat 7....Ø5

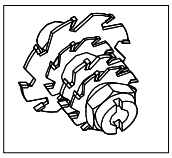

FT-0577F
Ø3
8,1
7,9
10°
710.079
710.079
710.066
431.342
431.904
431.266
431.266
431.904
FT-0577F
220.017

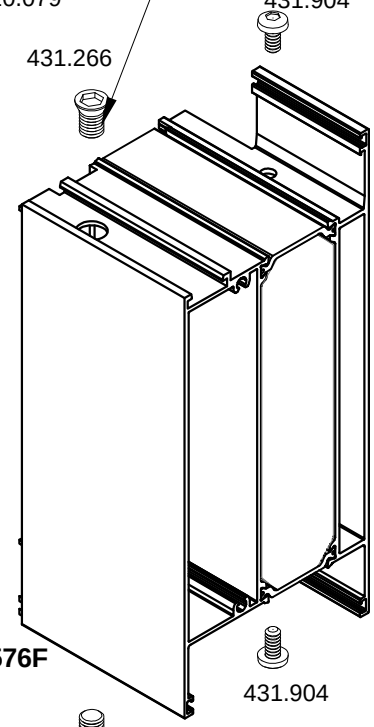

43.9
30.5
A
4.1
12.1
4.2
29.8
17
13.6
3.7
84.5
5.8
Ø5
2.3
5.5
Ø10.5
0.7
A
5.5
20.8
26.3
95
17
7.9
84.5
11.7
FT-0577F
A-A
16.9
210.007
alat 6....Ø10.5
alat 7....Ø5

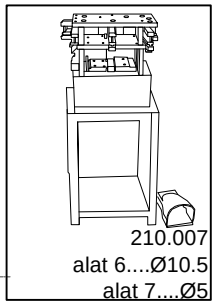

Ø3
8,1
7,9
10°

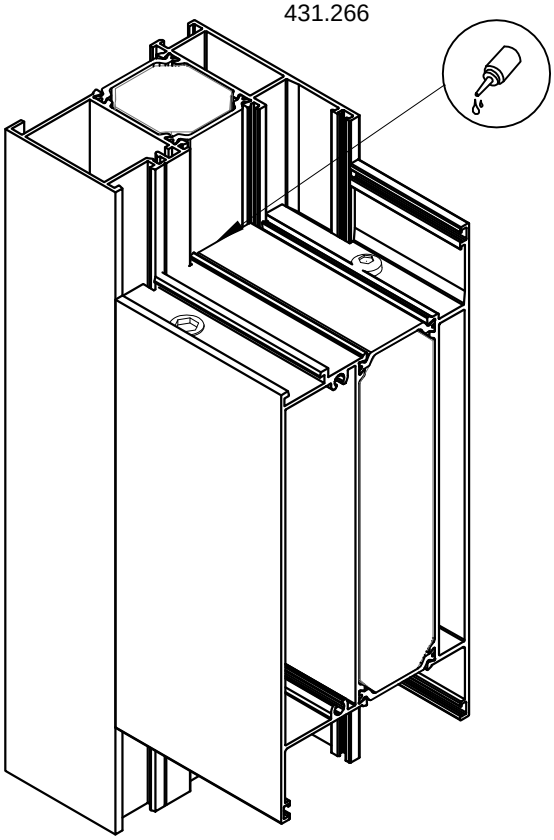

7,9
11,7
192
116
FT-0576F
115,3
A-A
7,9
11,7

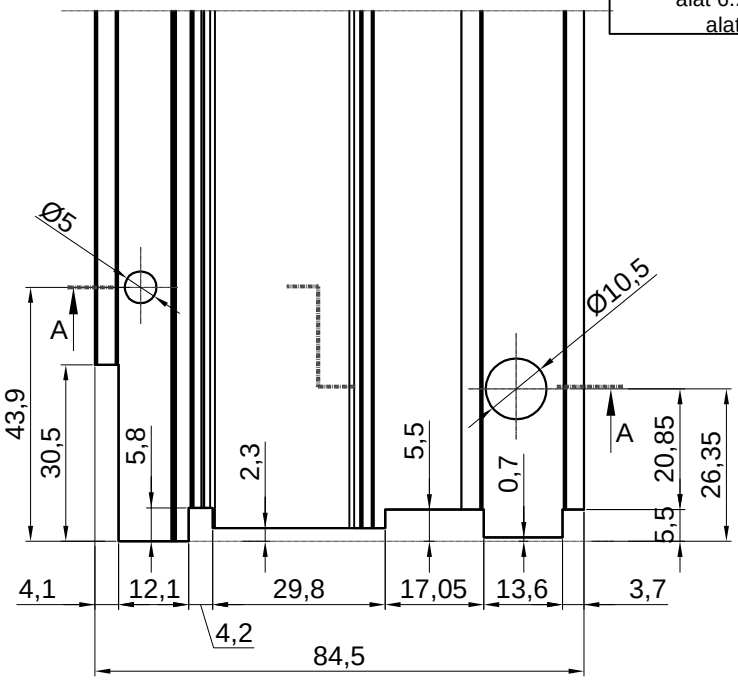

FT-0555F
710.079
710.066
431.342
710.066
710.079
431.342

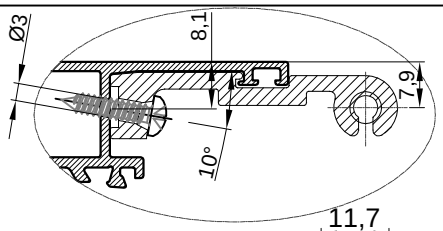

220.017

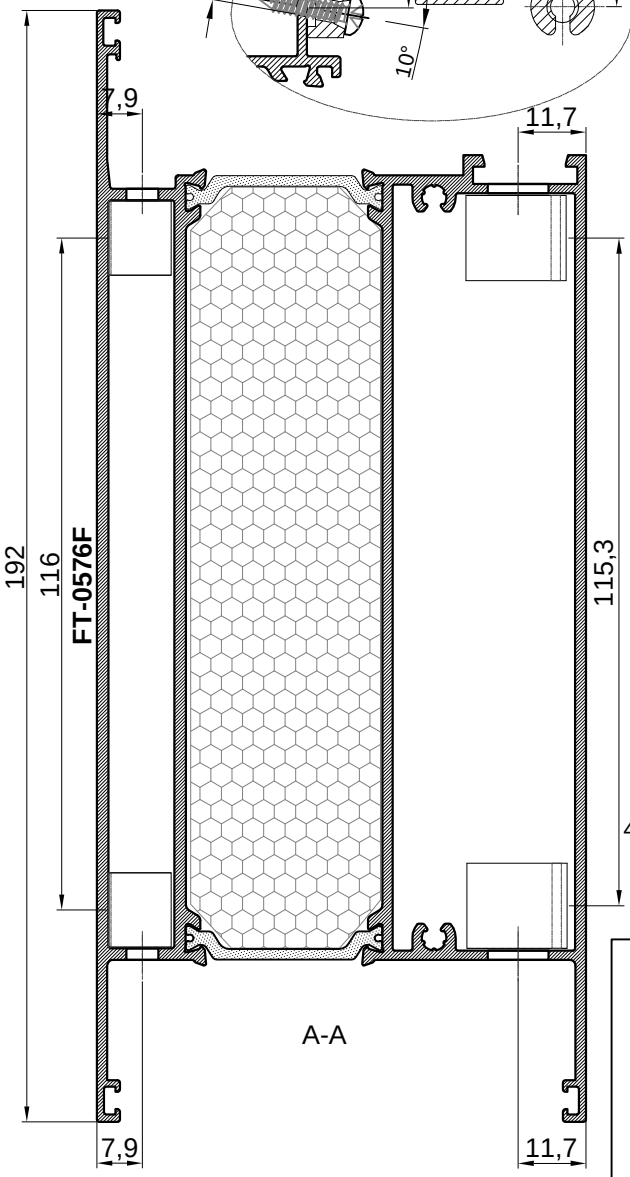

431.904
431.266
FT-0576F
431.904
431.266

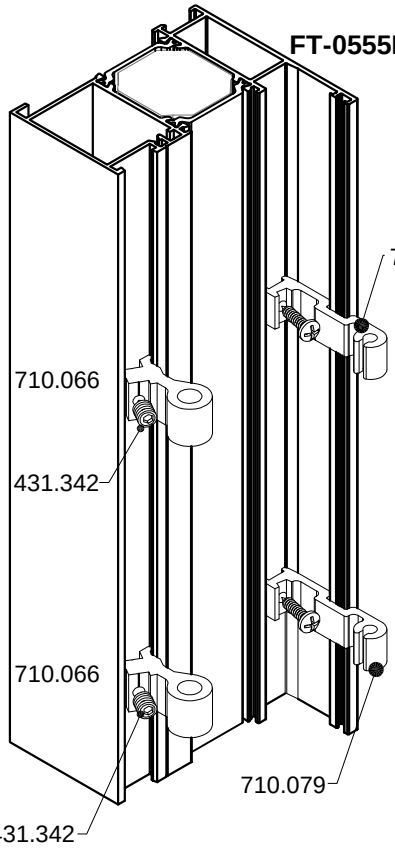

210.007
alat 6....Ø10.5
alat 7....Ø5

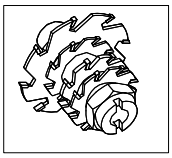


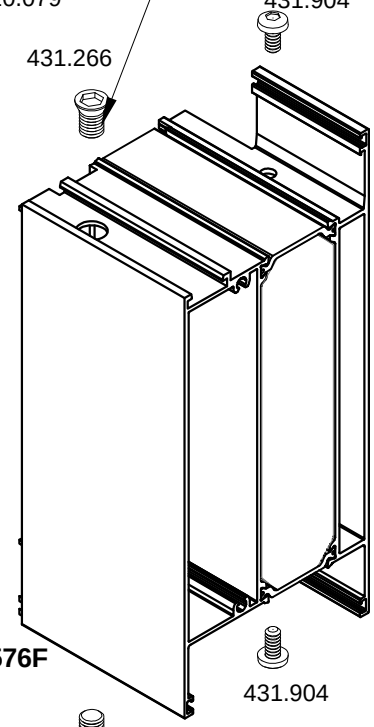

Ø5
A
Ø10,5
A
43,9
30,5
5,8
2,3
5,5
0,7
20,85
26,35
5,5
4,1
12,1
29,8
17,05
13,6
3,7
4,2
84,5

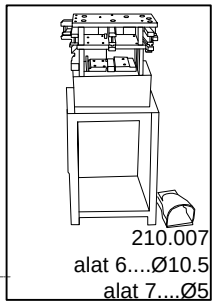

Ø3
8,1
7,9
10°

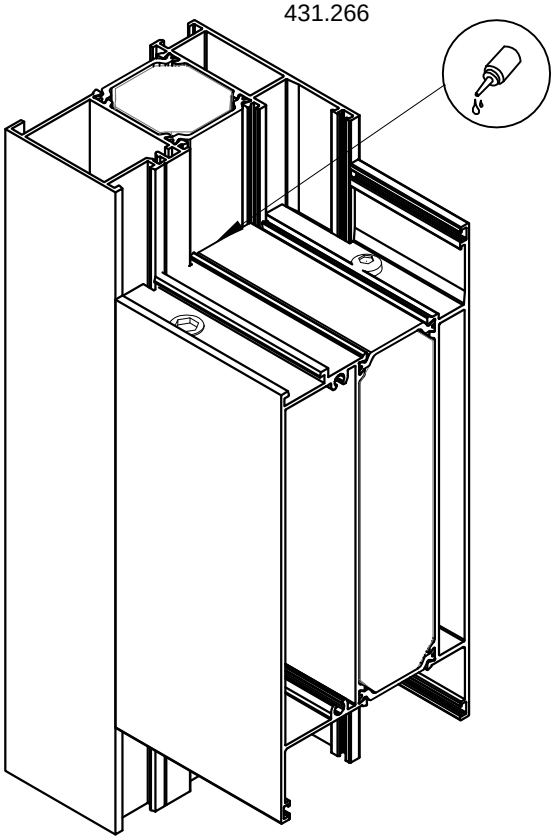

7,9
11,7
192
116
FT-0576F
115,3
A-A
7,9
11,7

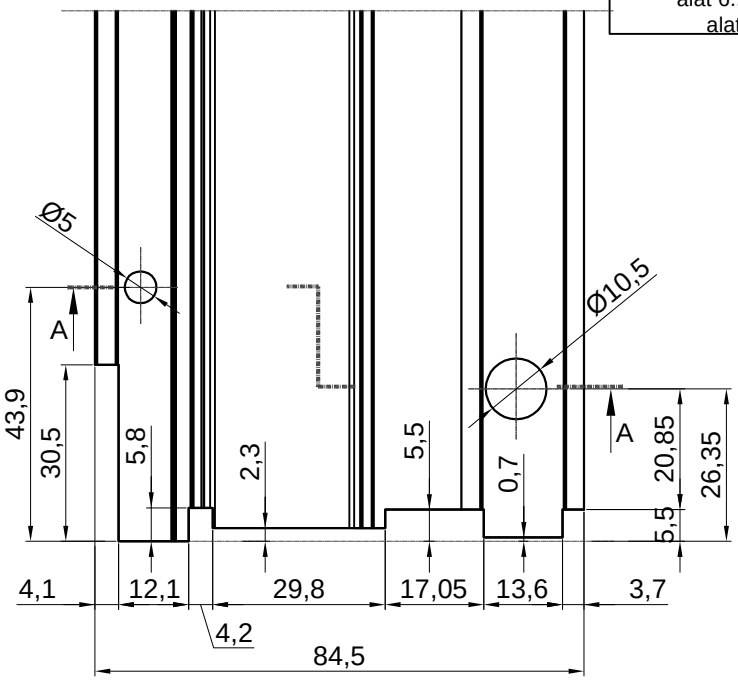

FT-0555F
710.079
710.066
431.342
710.066
710.079
431.342

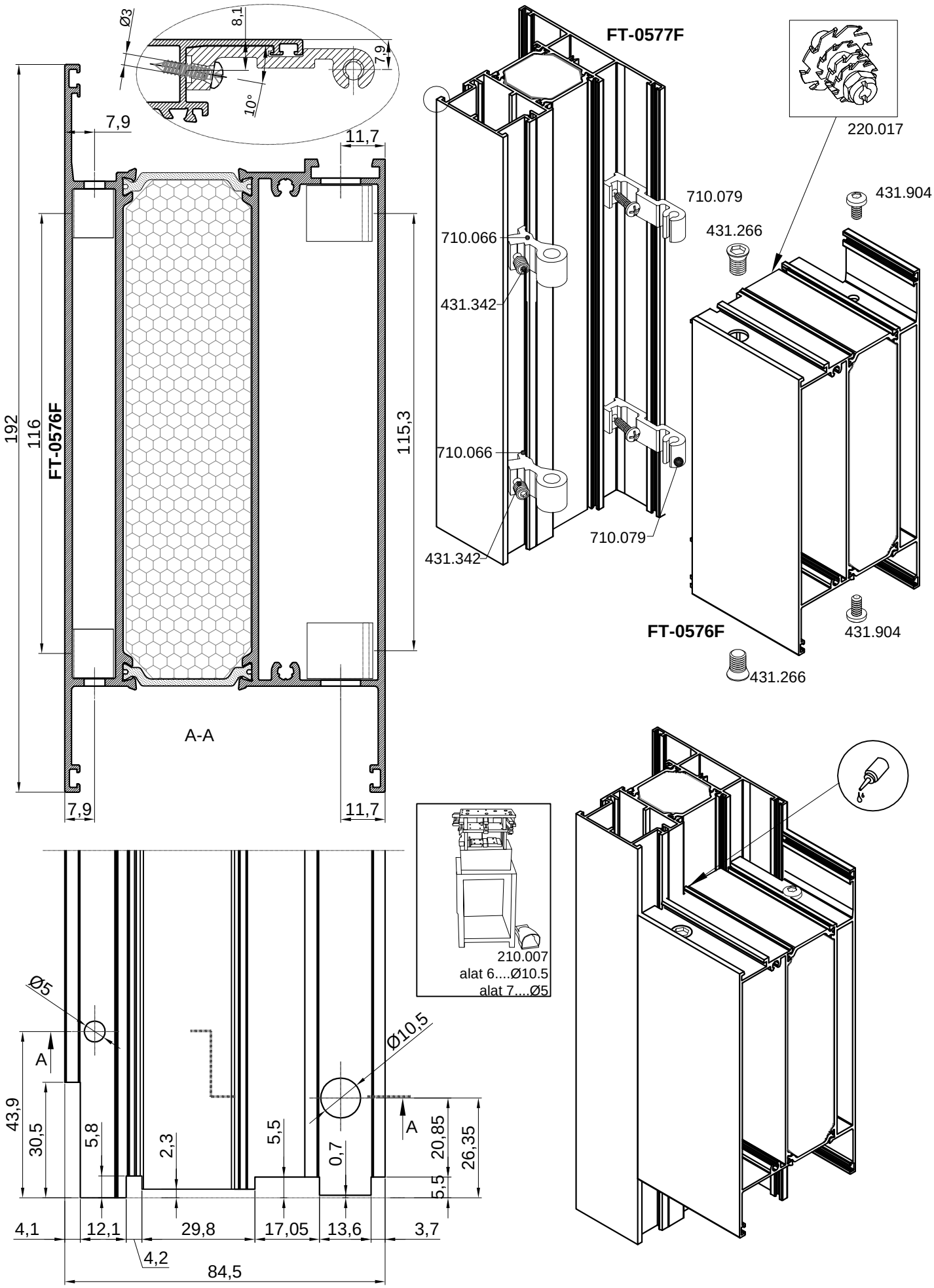

220.017

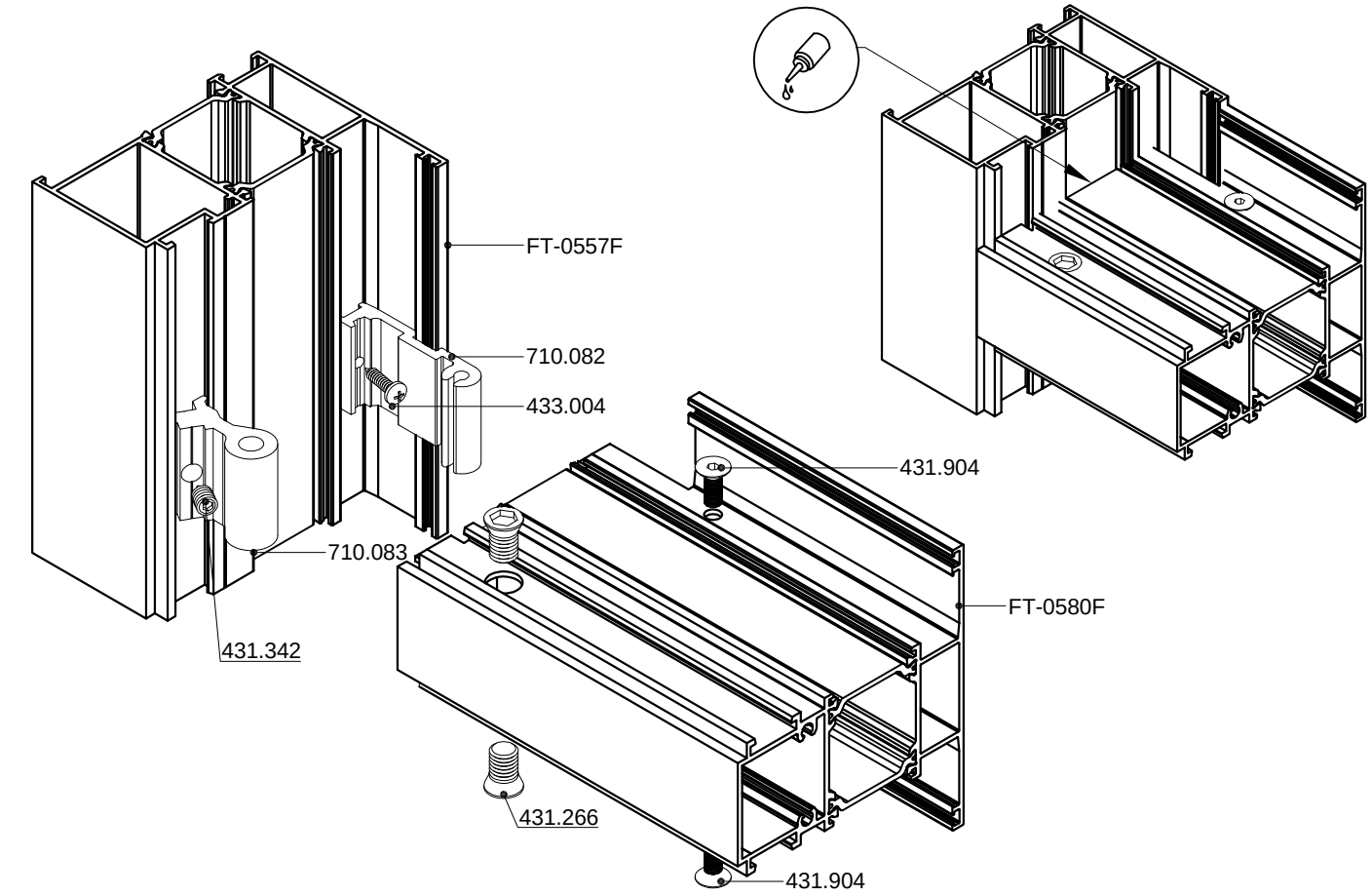

431.904
431.266
FT-0576F
431.904
431.266

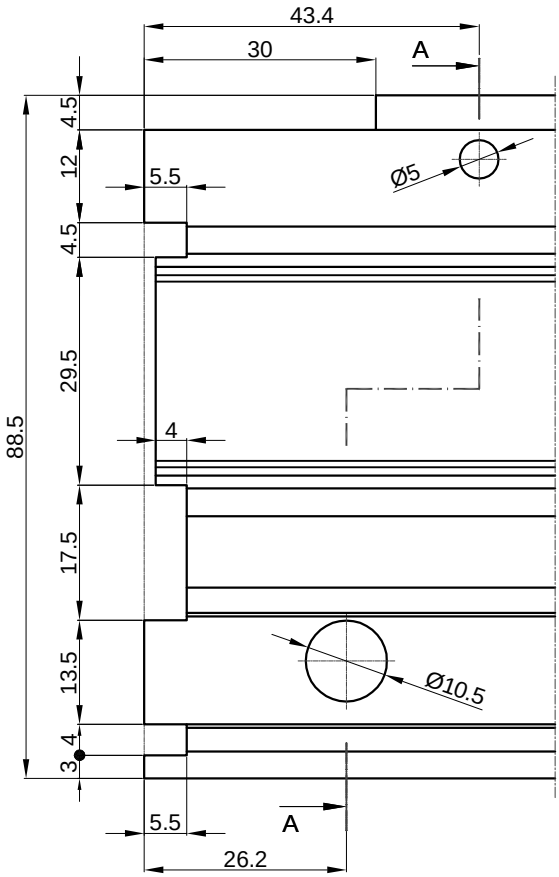

210.007
alat 6....Ø10.5
alat 7....Ø5

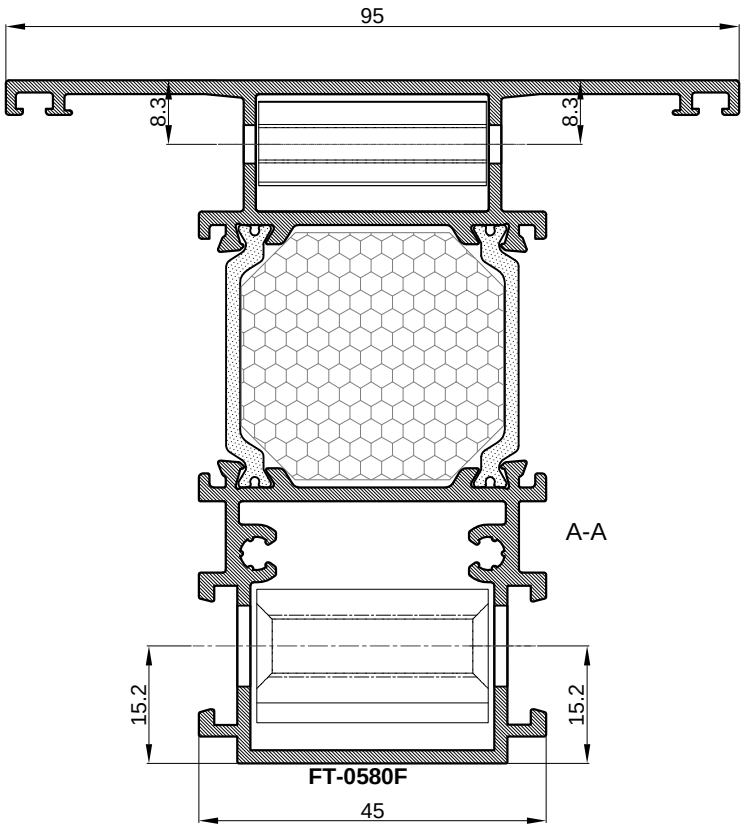


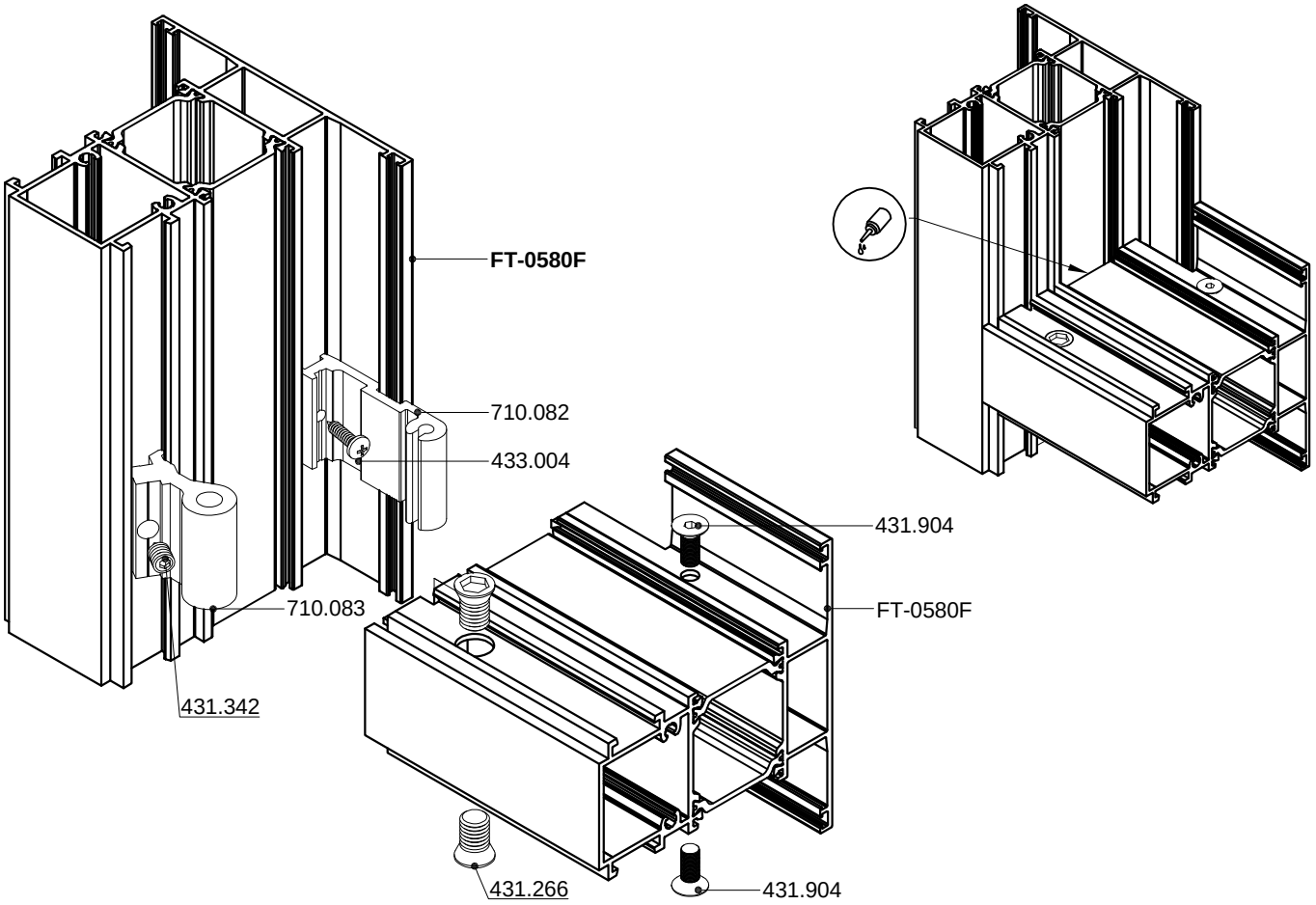

Ø5
A
Ø10,5
A
43,9
30,5
5,8
2,3
5,5
0,7
20,85
26,35
5,5
4,1
12,1
29,8
17,05
13,6
3,7
4,2
84,5

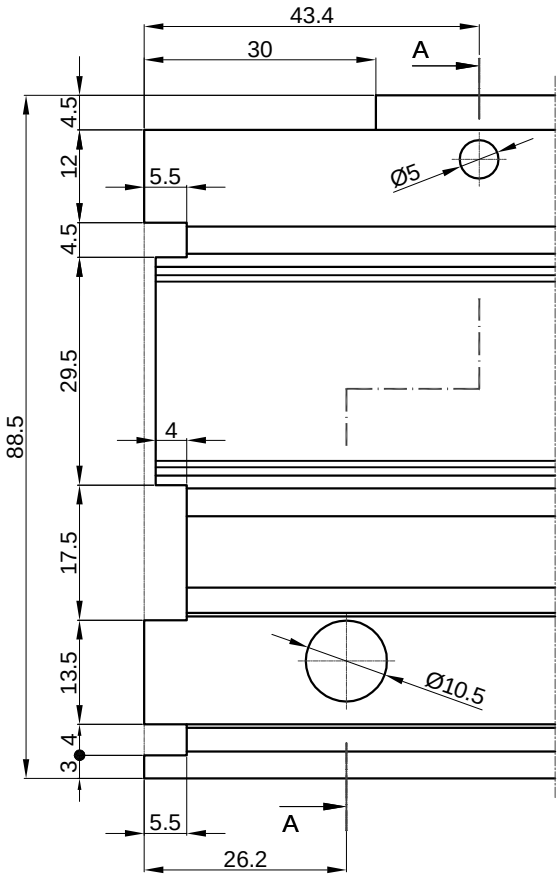

Ø3
8,1
7,9
10°
7,9
11,7
192
116
FT-0576F
115,3
7,9
11,7
A-A
FT-0577F
710.079
431.904
431.266
710.066
431.342
710.066
710.079
431.342
220.017
FT-0576F
431.904
431.266
210.007
alat 6....Ø10.5
alat 7....Ø5
Ø5
A
Ø10,5
A
43,9
30,5
5,8
2,3
5,5
0,7
20,85
26,35
5,5
4,1
12,1
29,8
17,05
13,6
3,7
4,2
84,5

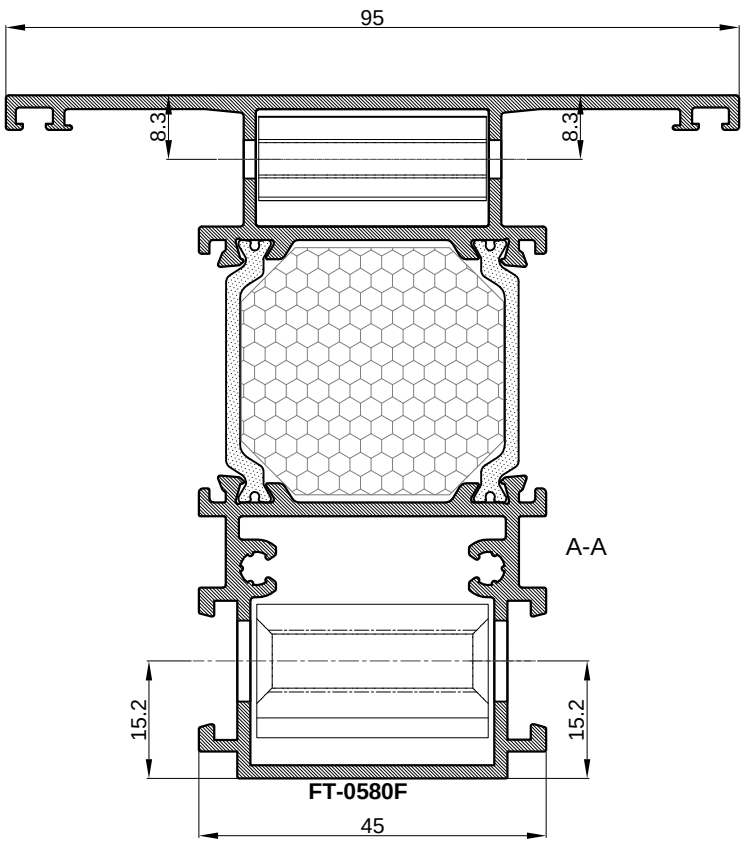

FT-0557F
710.082
433.004
710.083
431.342
431.904
FT-0580F
431.266
431.904

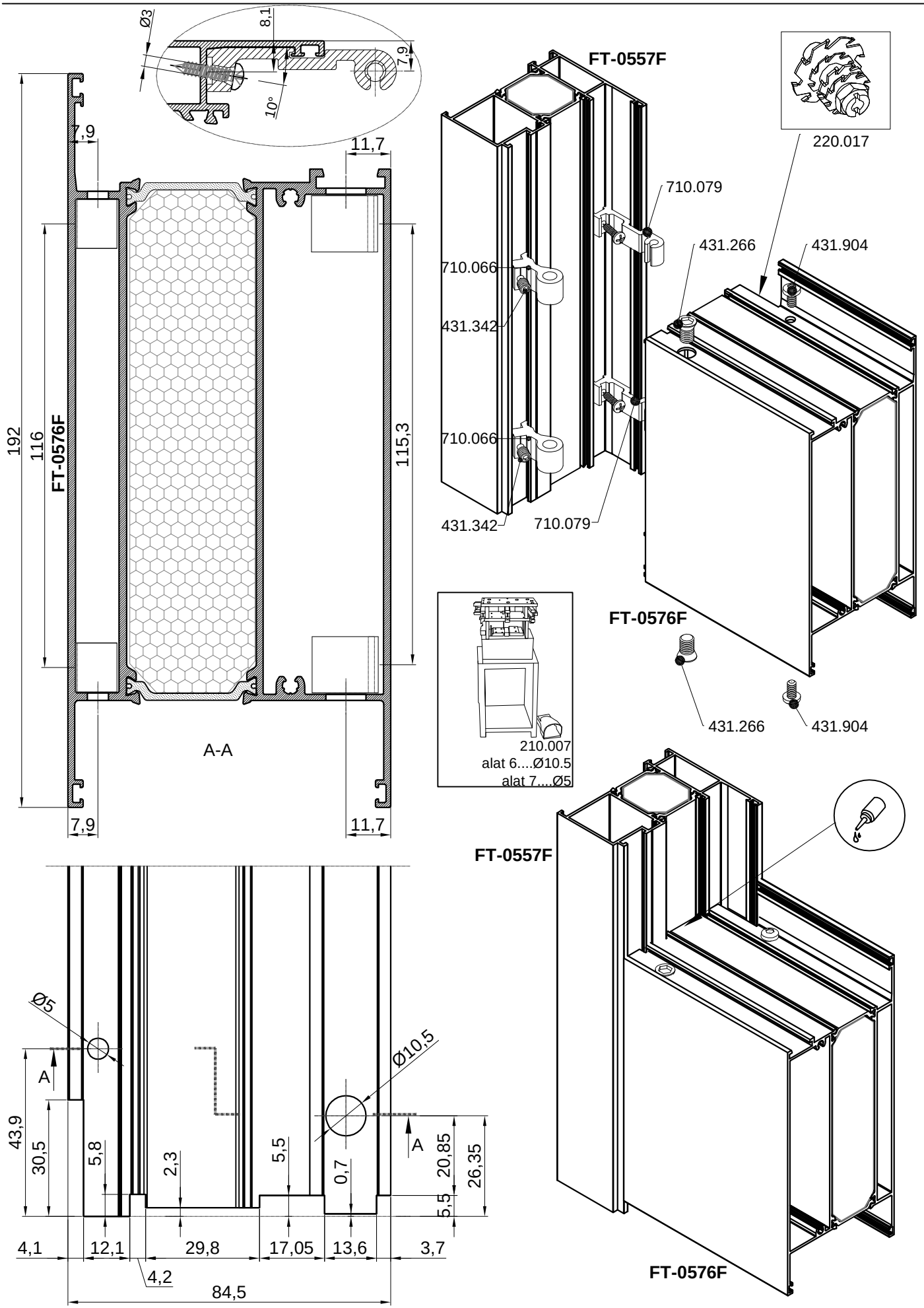

43.4
30
A
4.5
12
5.5
Ø5
4.5
29.5
88.5
4
17.5
13.5
Ø10.5
3.4
5.5
A
26.2

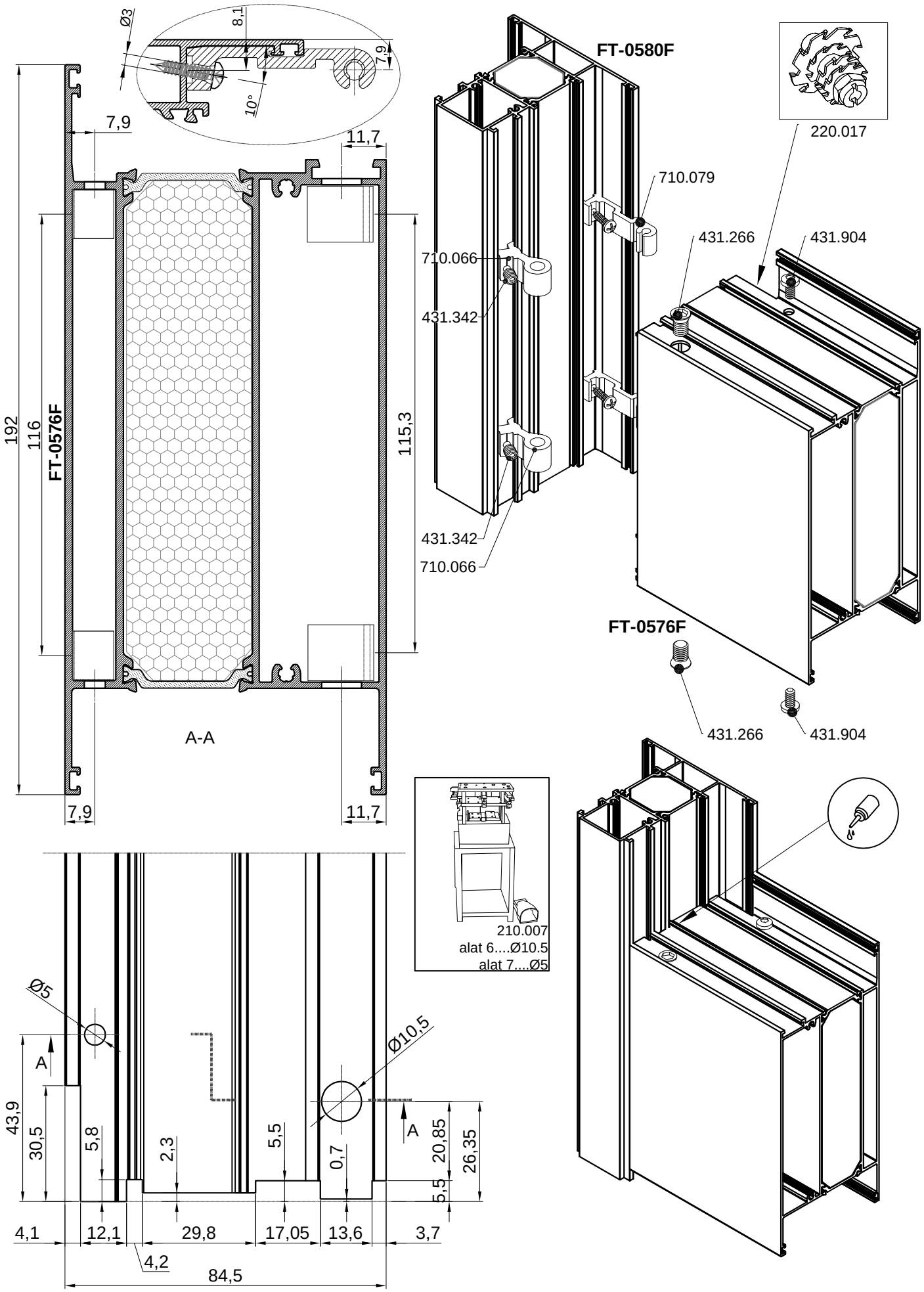

95
8.3
8.3
A-A
15.2
15.2
FT-0580F
45

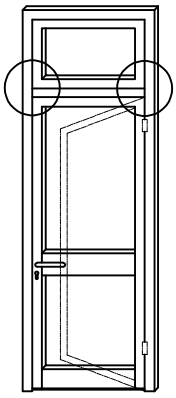

FT-0580F
710.082
433.004
710.083
431.342
431.904
FT-0580F
431.266
431.904


43.4
30
A
4.5
12
4.5
29.5
17.5
13.5
3.4
88.5
5.5
Ø5
4
Ø10.5
5.5
A
26.2


95
8.3
8.3
A-A
15.2
15.2
FT-0580F
45


Ø3
8,1
7,9
10°
7,9
11,7
192
116
FT-0576F
115,3
A-A
7,9
11,7
FT-0557F
220.017
710.079
710.066
431.342
710.066
431.342
710.079
431.266
431.904
FT-0576F
431.266
431.904
210.007
alat 6....Ø10.5
alat 7....Ø5
FT-0557F
FT-0576F
Ø5
Ø10,5
A
A
43,9
30,5
5,8
2,3
5,5
0,7
20,85
26,35
5,5
4,1
12,1
29,8
17,05
13,6
3,7
4,2
84,5

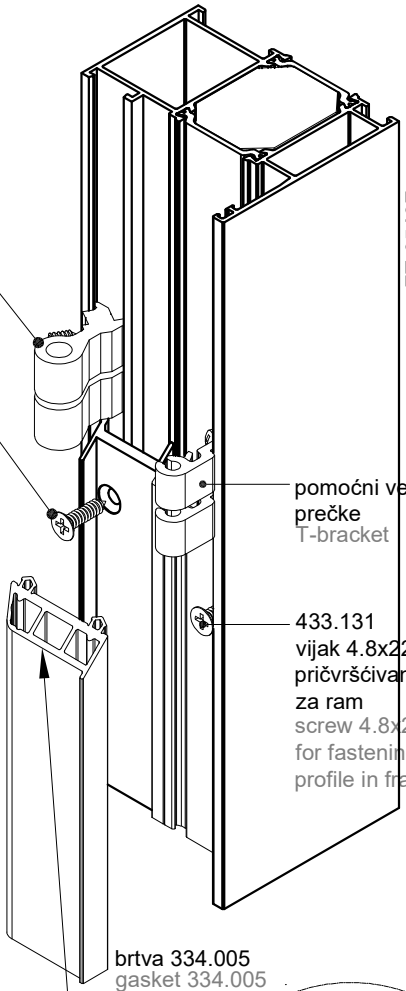

Ø3
8,1
7,9
10°
7,9
11,7
192
116
FT-0576F
115,3
7,9
11,7
A-A
FT-0580F
710.079
710.066
431.342
431.342
710.066
220.017
431.266
431.904
FT-0576F
431.266
431.904
210.007
alat 6....Ø10.5
alat 7....Ø5
Ø5
A
Ø10,5
A
43,9
30,5
5,8
2,3
5,5
0,7
20,85
5,5
26,35
4,1
12,1
29,8
17,05
13,6
3,7
4,2
84,5



veznik prečke
T-bracket

433.130
vijak 4.8x19 DIN 7982 za pričvršćivanje F-1222 za ram
screw 4.8x19 DIN 7982 for fastening profile F-1222 on frame

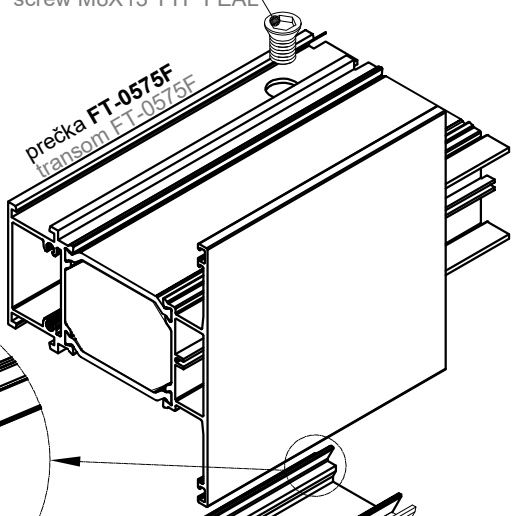
431.266
vijak M8X13 TIP FEAL
screw M8X13 TYP FEAL



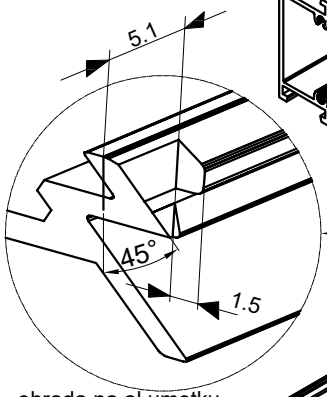
ram **FT-0513F**
frame FT-0513F

pomoćni veznik prečke
T-bracket

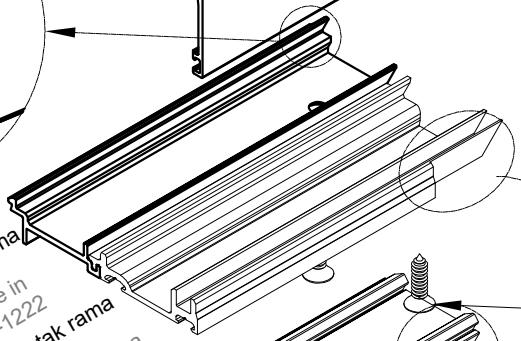
433.131
vijak 4.8x22 DIN 7982 za pričvršćivanje pvc umetka za ram
screw 4.8x22 DIN 7982 for fastening add. pvc profile in frame



prečka **FT-0575F**
transom FT-0575F



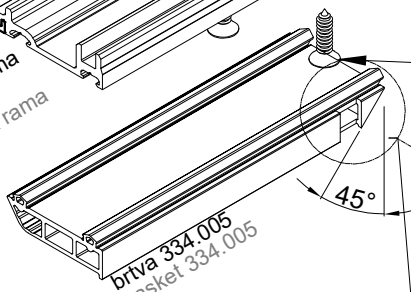
- obrada na al umetku rama F-1222-
- processing on add. profile on frame F-1222-

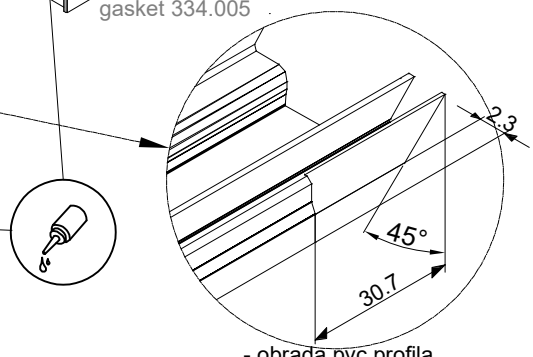


al umetak rama F-1222
add. profile in frame F-1222

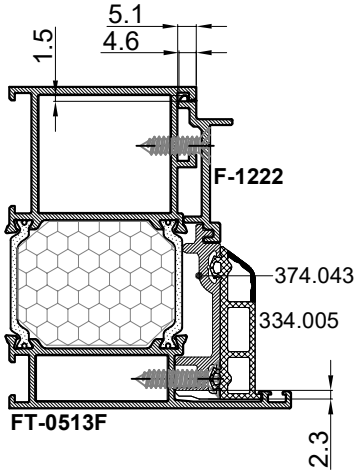
pvc umetak rama 374.043
pvc umetak rama 374.043

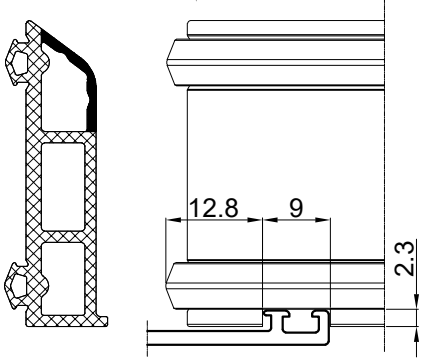
brtva 334.005
gasket 334.005

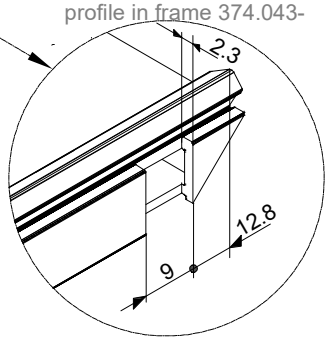




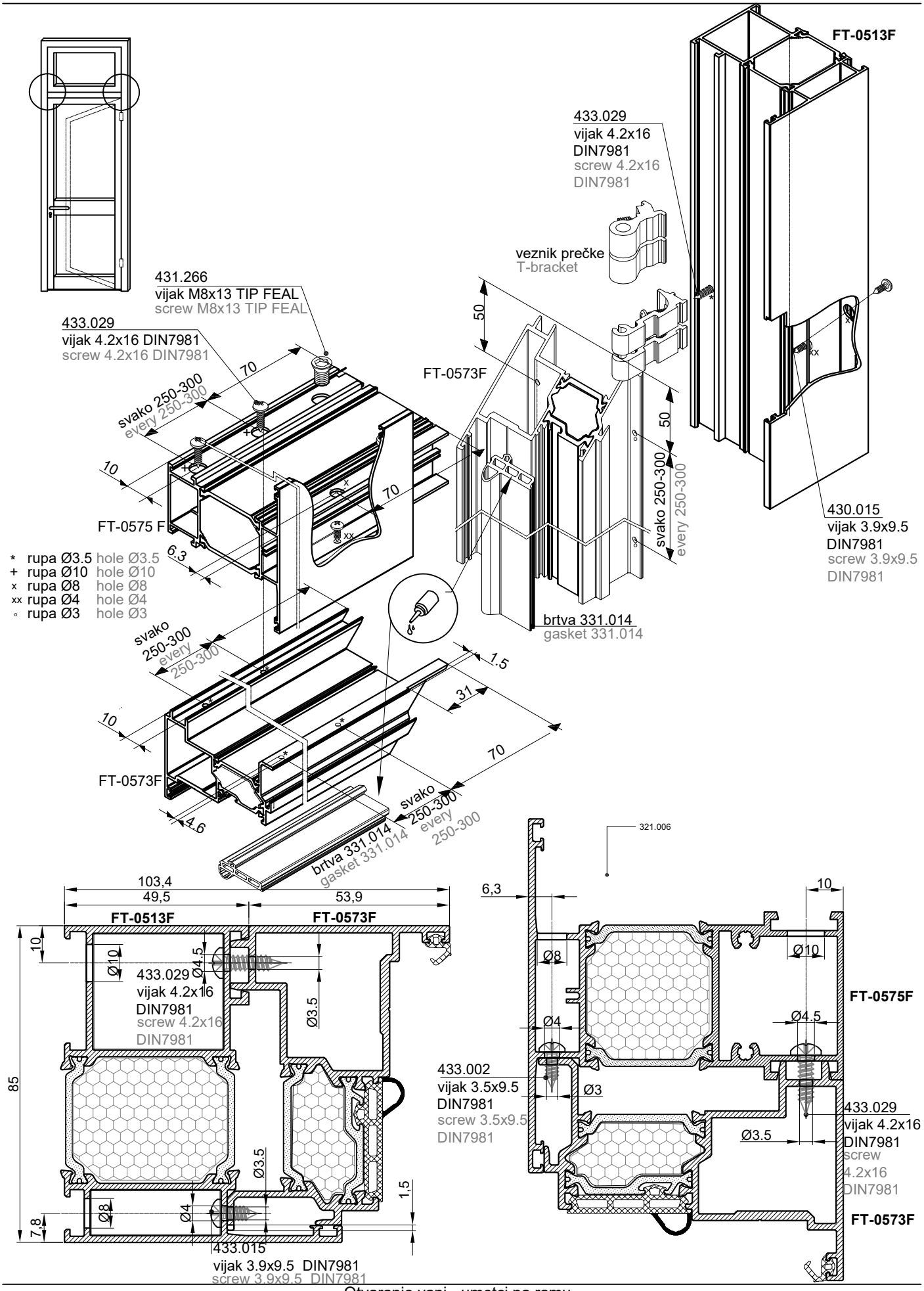
- obrada pvc profila umetka rama 374.043-
- processing additional pvc profile in frame 374.043-

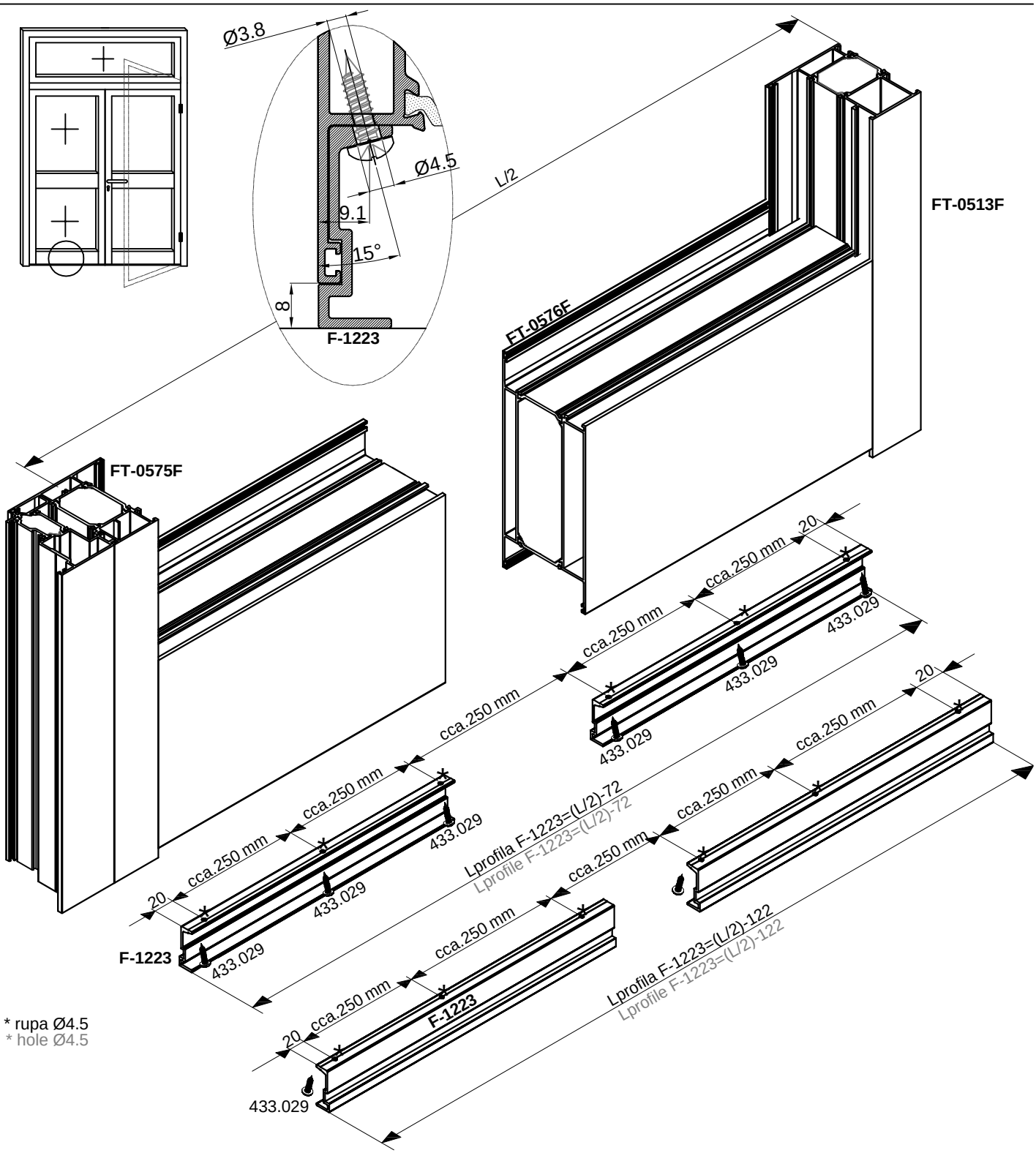




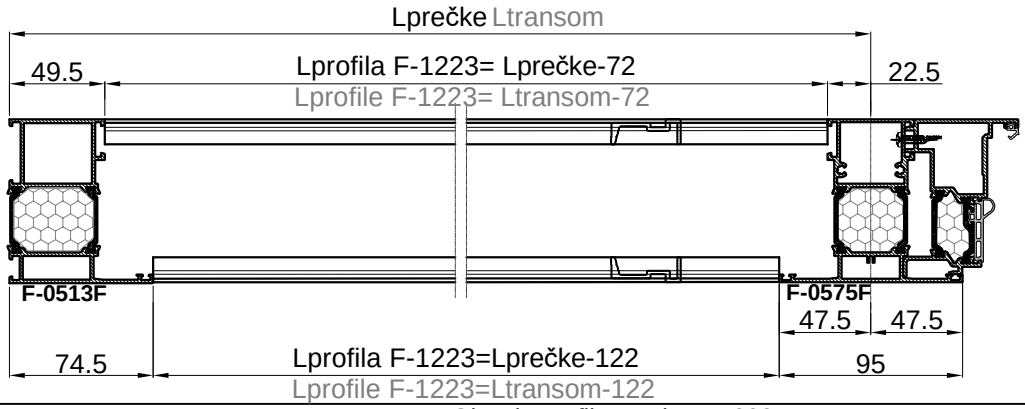


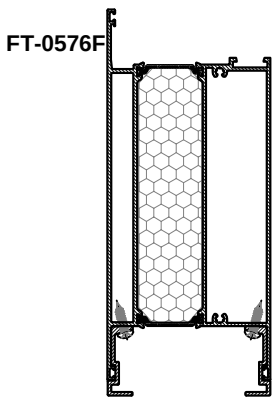
- obrada na centralnoj brtvi 334.005-
- processing on central gasket 334.005-

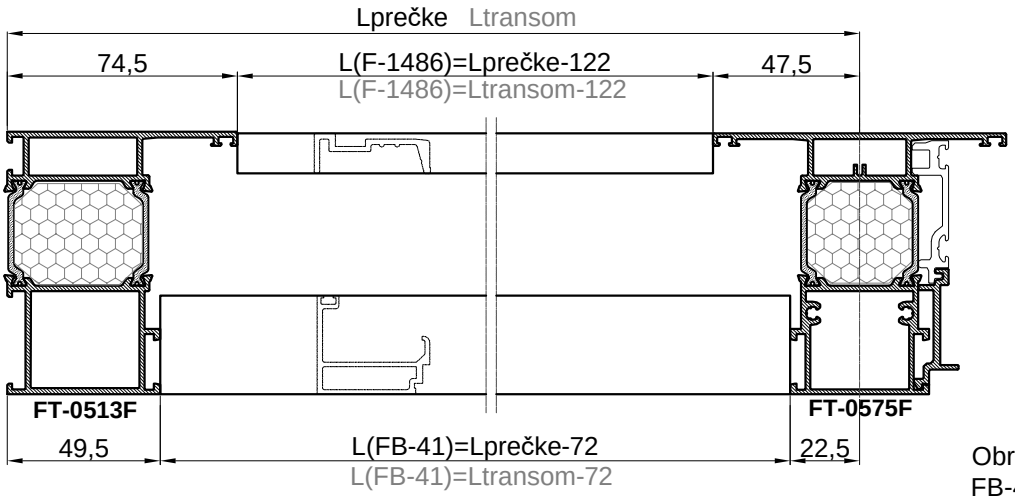

FT-0513F
433.029
vijak 4.2x16
DIN7981
screw 4.2x16
DIN7981
veznik prečke
T-bracket
431.266
vijak M8x13 TIP FEAL
screw M8x13 TIP FEAL
433.029
vijak 4.2x16 DIN7981
screw 4.2x16 DIN7981
FT-0573F
50
svako 250-300
every 250-300
70
10
FT-0575 F
6.3
50
svako 250-300
every 250-300
430.015
vijak 3.9x9.5
DIN7981
screw 3.9x9.5
DIN7981
* rupa Ø3.5 hole Ø3.5
+ rupa Ø10 hole Ø10
x rupa Ø8 hole Ø8
xx rupa Ø4 hole Ø4
◦ rupa Ø3 hole Ø3
brtva 331.014
gasket 331.014
svako 250-300 every 250-300
1.5
31
10
70
FT-0573F
4.6
brtva 331.014
gasket 331.014
svako 250-300 every 250-300
321.006
103,4
49,5
53,9
FT-0513F
FT-0573F
10
Ø10
433.029
vijak 4.2x16
DIN7981
screw 4.2x16
DIN7981
Ø4.5
Ø3.5
85
Ø3.5
1.5
Ø8
Ø4
7.8
433.015
vijak 3.9x9.5 DIN7981
screw 3.9x9.5 DIN7981
6,3
10
Ø8
Ø10
FT-0575F
Ø4
Ø4.5
433.002
vijak 3.5x9.5
DIN7981
screw 3.5x9.5
DIN7981
Ø3
Ø3.5
433.029
vijak 4.2x16
DIN7981
screw
4.2x16
DIN7981
FT-0573F

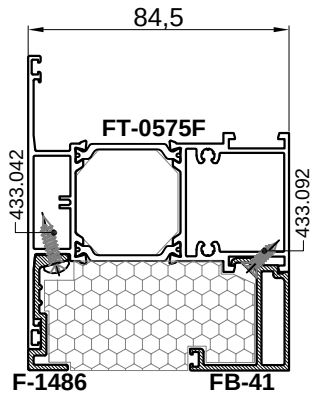


* rupa Ø4.5
* hole Ø4.5

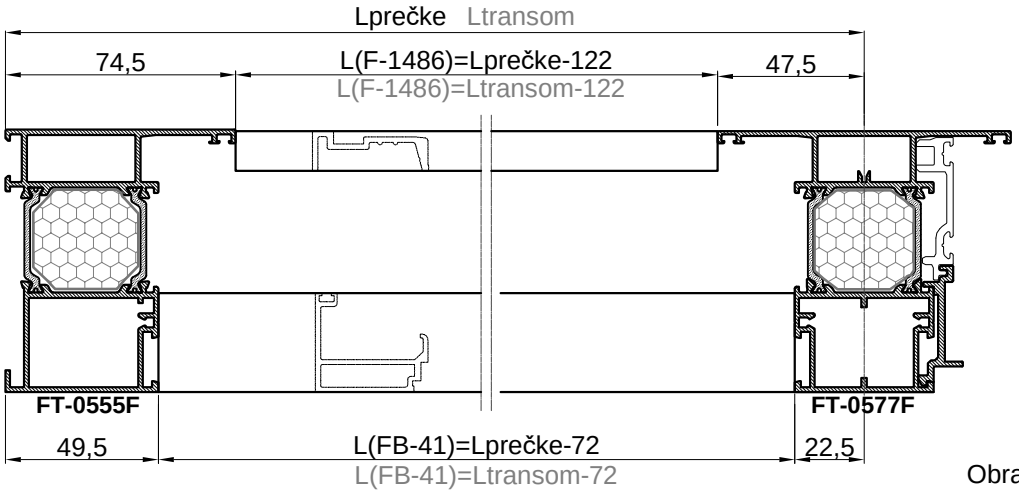


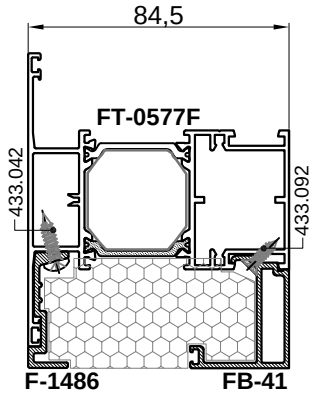




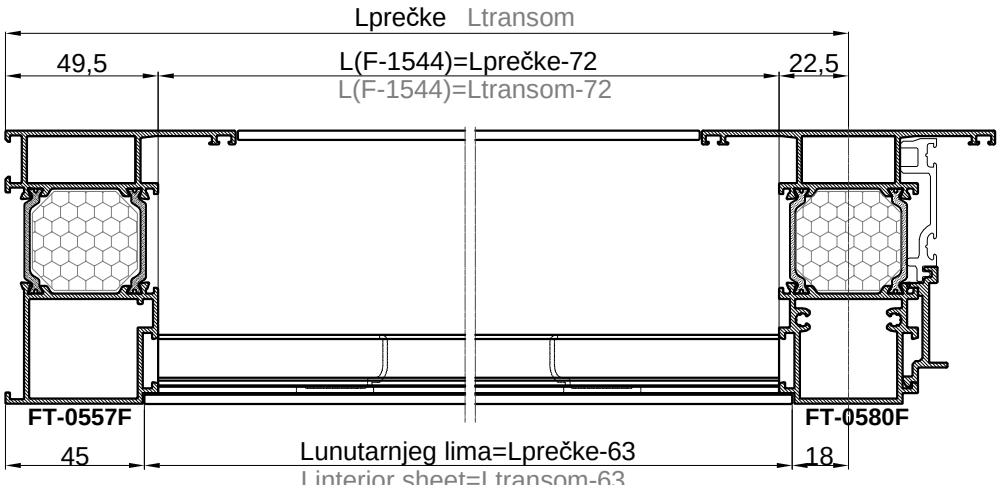


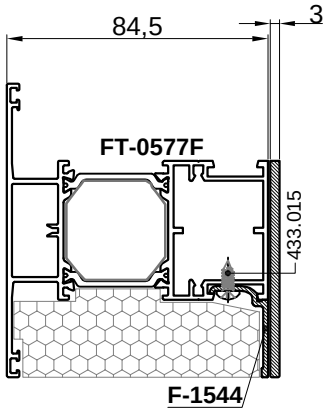
Obrada dodatnih profila F-1486 i FB-41 u parapetnoj prečki FT-0575F
Processing additional profiles F-1486 and FB-41 in transom-bottom fixed profile FT-0575F



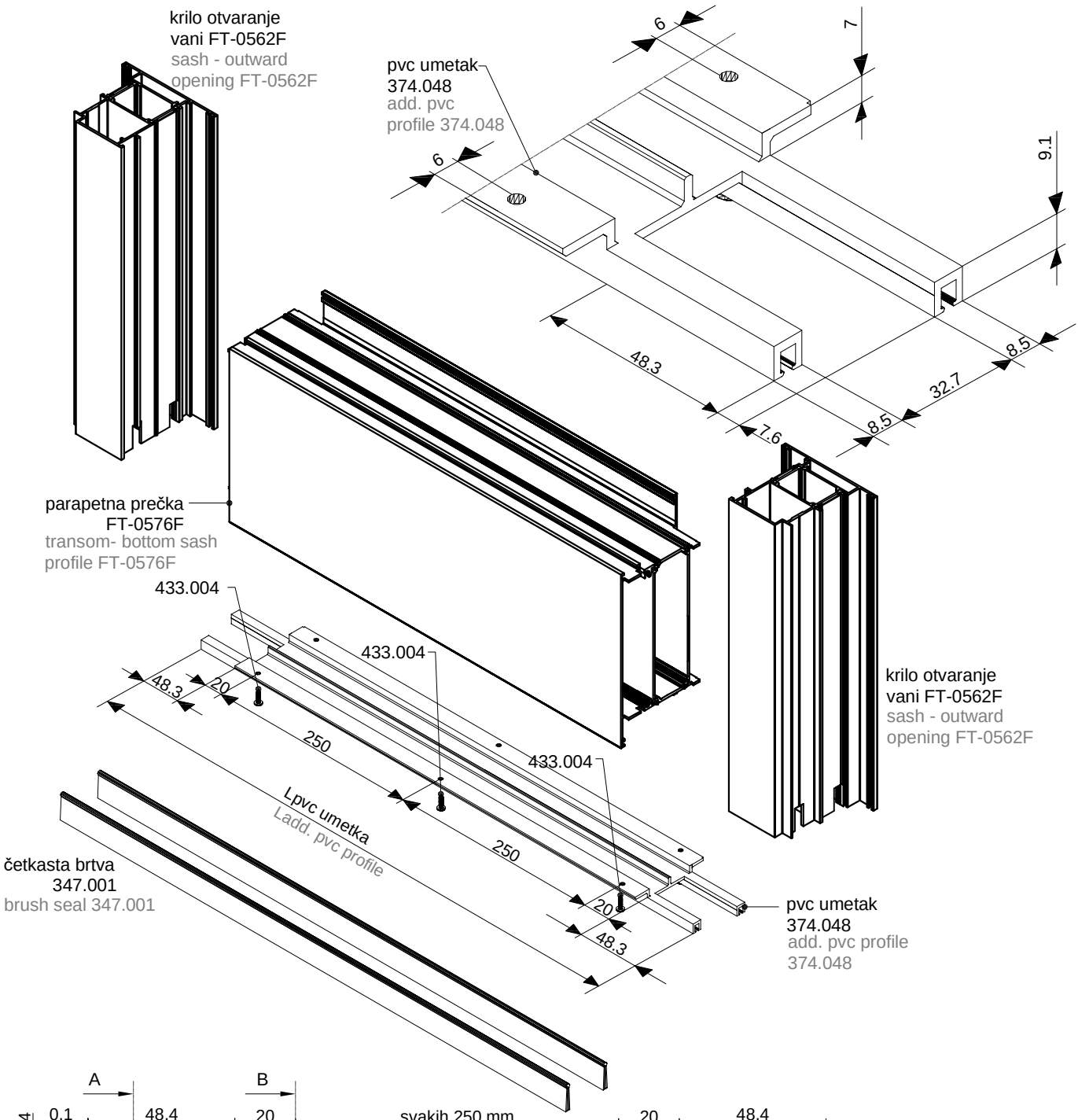


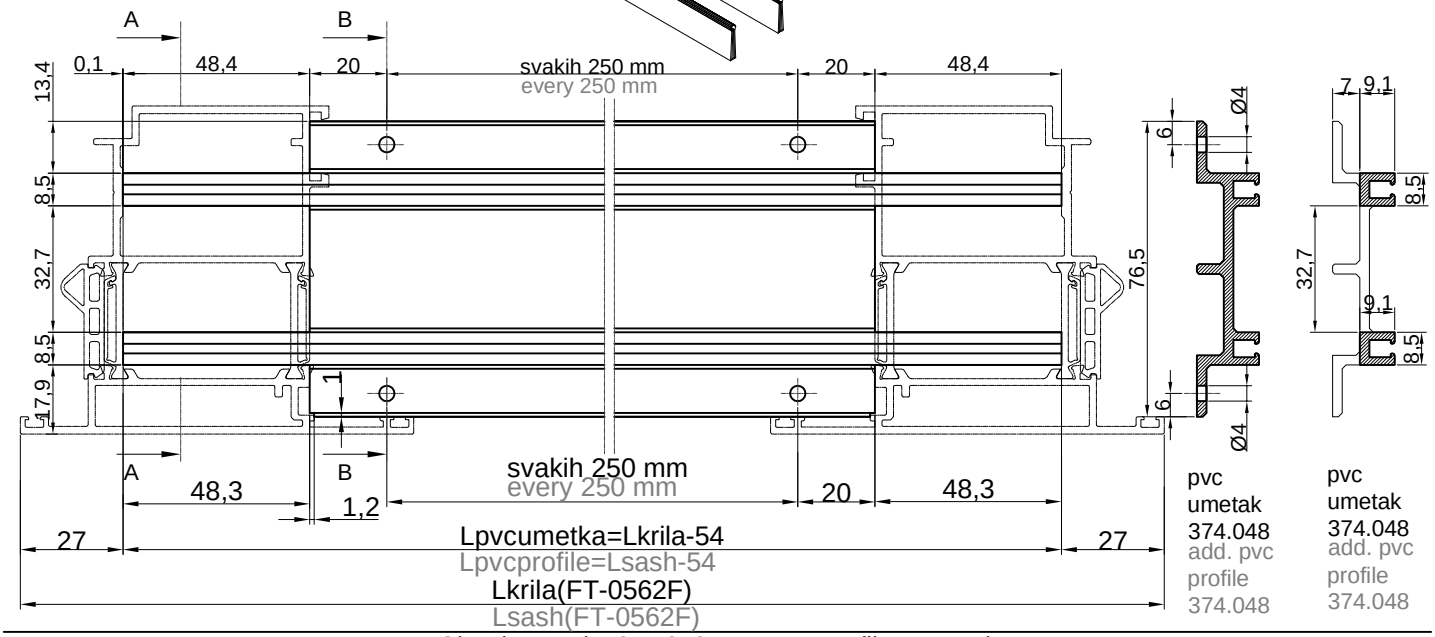
Obrada dodatnih profila F-1486 i FB-41 u parapetnoj prečki FT-0577F
Processing additional profiles F-1486 and FB-41 in transom-bottom fixed profile FT-0577F

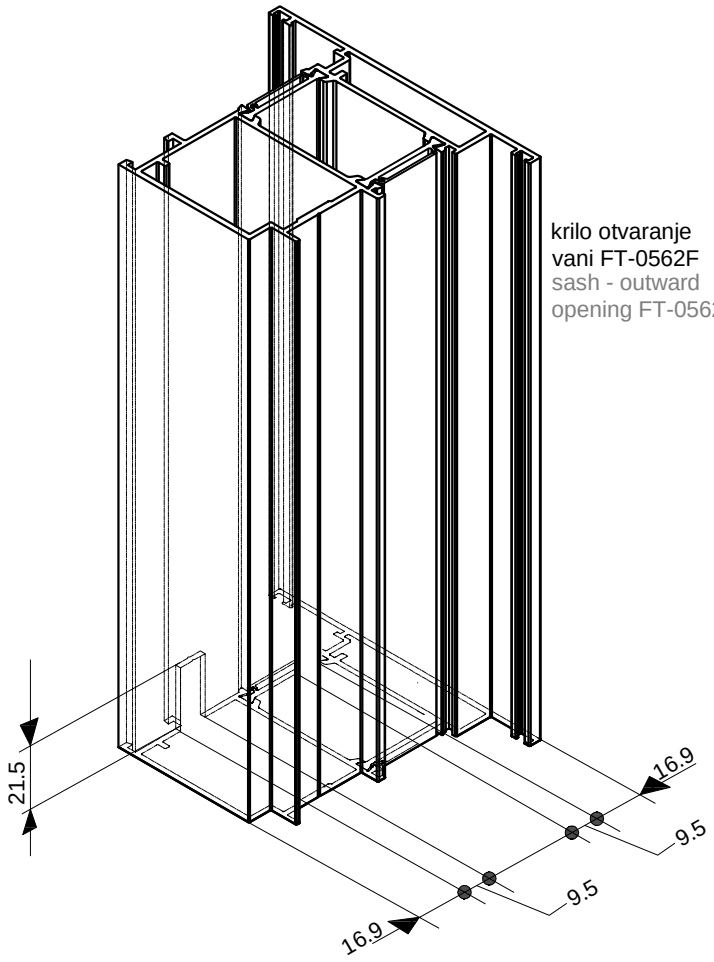




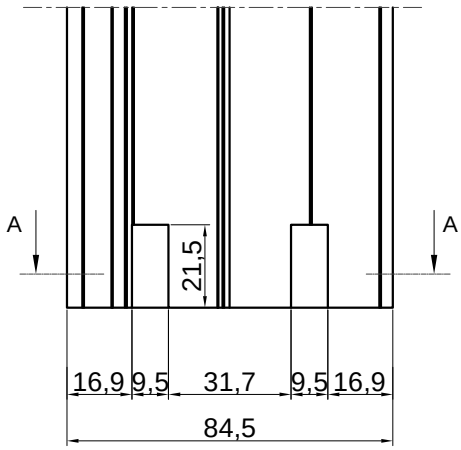
Obrada dodatnog profila F-1544 u parapetnoj prečki FT-0577F
Processing additional profile F-1544 in transom-bottom fixed profile FT-0577F

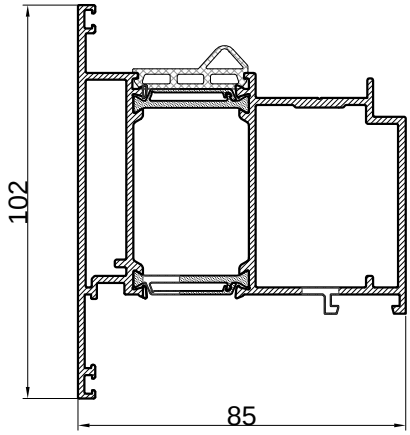

krilo otvaranje
vani FT-0562F
sash - outward
opening FT-0562F
pvc umetak
374.048
add. pvc
profile 374.048
6
7
9.1
48.3
8.5
32.7
8.5
7.6
parapetna prečka
FT-0576F
transom- bottom sash
profile FT-0576F
433.004
433.004
48.3
20
250
433.004
Lpvc umetka
Ladd. pvc profile
250
20
48.3
krilo otvaranje
vani FT-0562F
sash - outward
opening FT-0562F
četkasta brtva
347.001
brush seal 347.001
pvc umetak
374.048
add. pvc profile
374.048


A
B
0,1
48,4
20
svakih 250 mm
every 250 mm
20
48,4
13,4
8,5
32,7
8,5
17,9
1
A
B
48,3
1,2
svakih 250 mm
every 250 mm
20
48,3
27
27
Lpvcumetka=Lkrila-54
Lpvcprofile=Lsash-54
Lkrila(FT-0562F)
Lsash(FT-0562F)
6
Ø4
76,5
6
Ø4
pvc
umetak
374.048
add. pvc
profile
374.048
7
9,1
8,5
32,7
9,1
8,5
pvc
umetak
374.048
add. pvc
profile
374.048



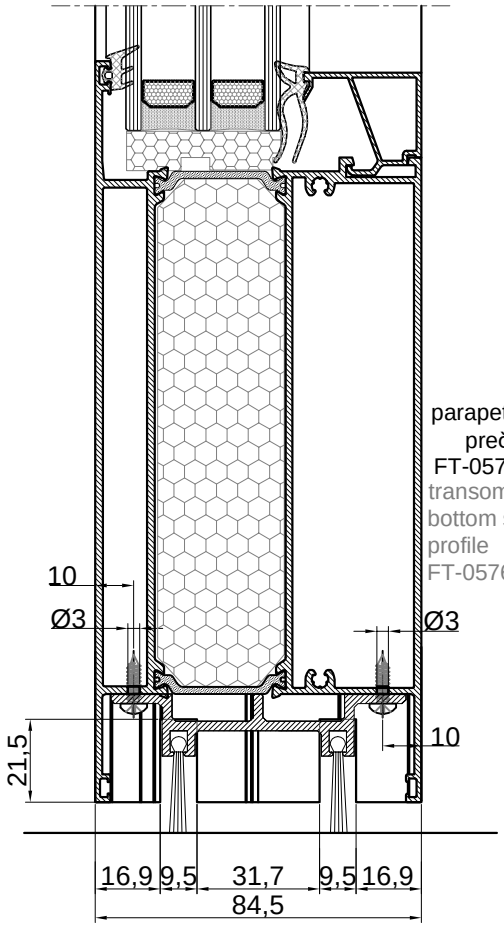
krilo otvaranje
vani FT-0562F
sash - outward
opening FT-0562F





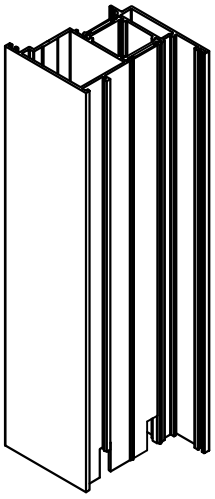
krilo otvaranje
vani FT-0562F
sash - outward
opening FT-0562F

A-A

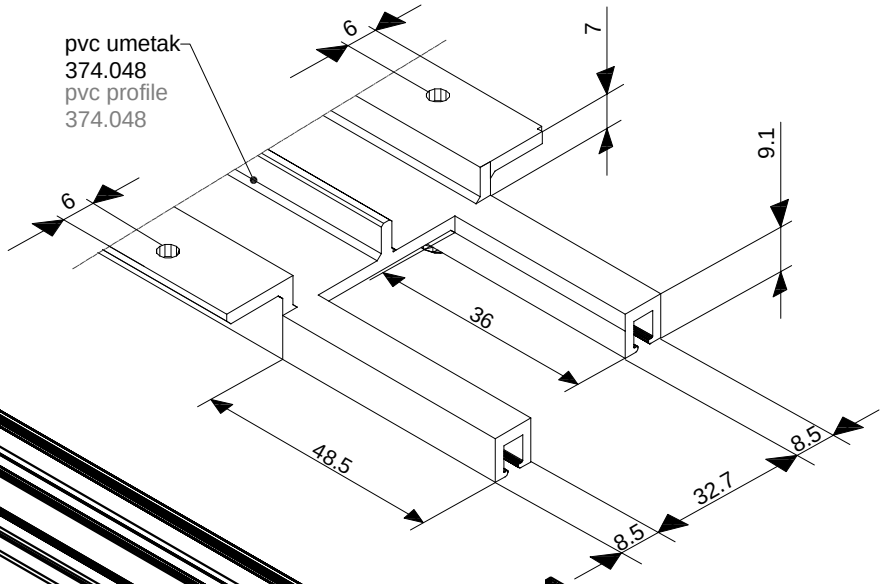


parapetna
prečka
FT-0576F
transom-
bottom sash
profile
FT-0576F

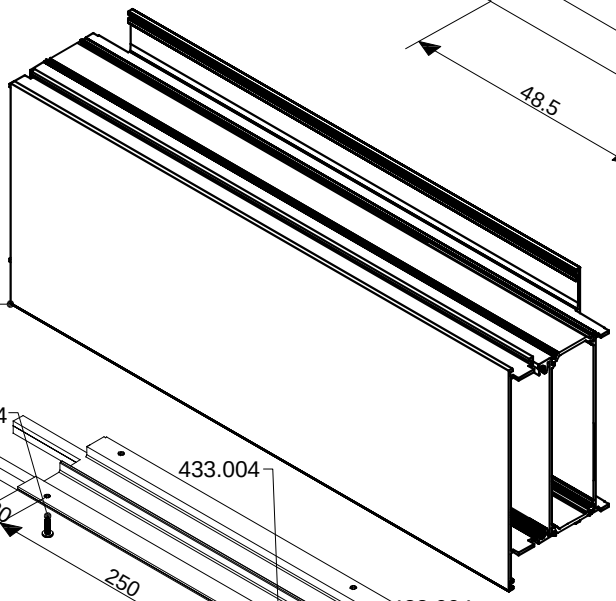
krilo otvaranje
unutra FT-0561F
sash - inward
opening FT-0561F

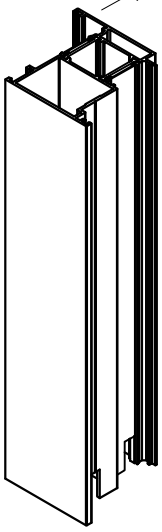


pvc umetak
374.048
pvc profile
374.048



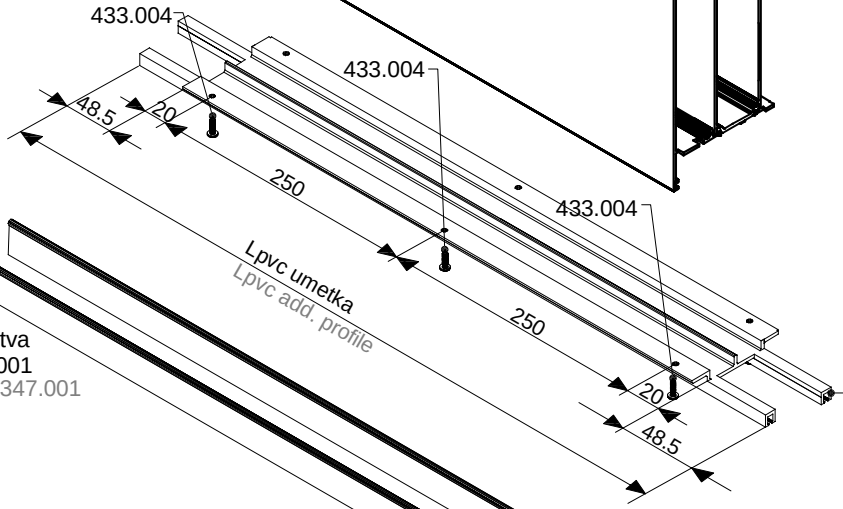
parapetna prečka
FT-0576F
transom-bottom sash
profile FT-0576F

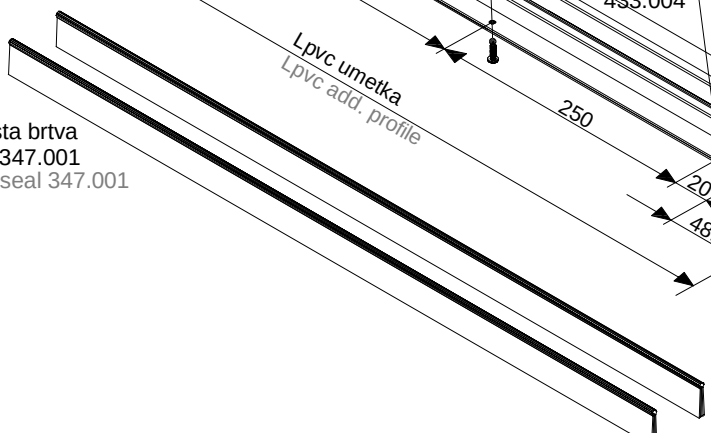




krilo otvaranje
unutra FT-0561F
sash - inward
opening FT-0561F

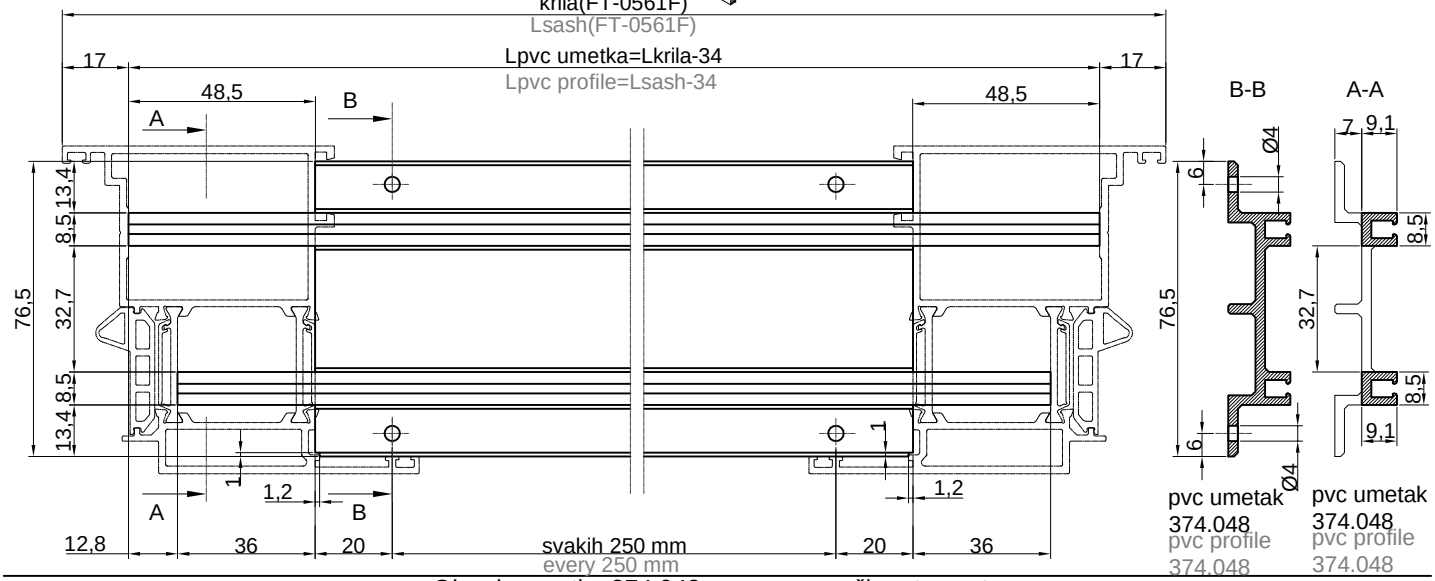
433.004

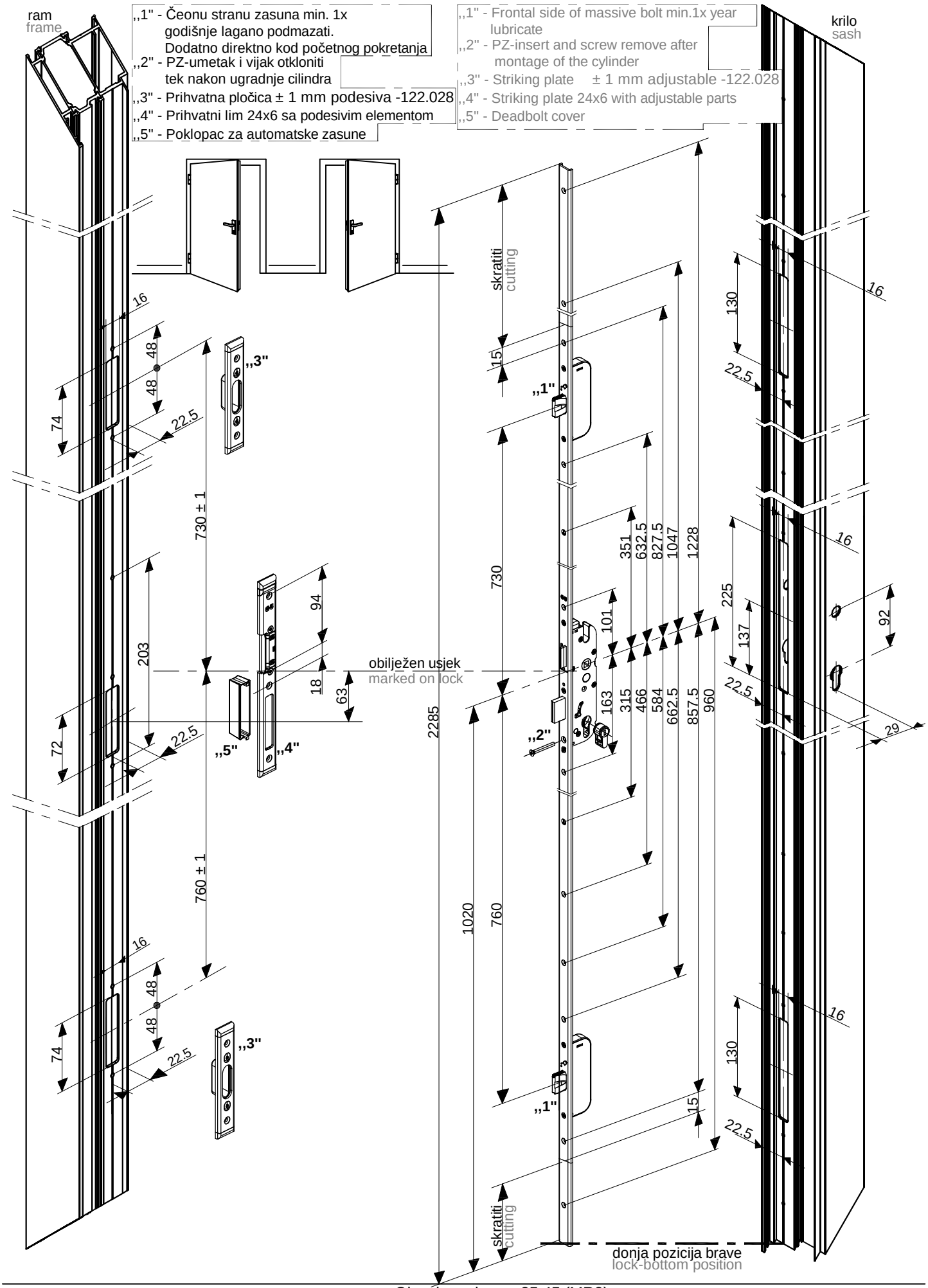




četkasta brtva
347.001
brush seal 347.001

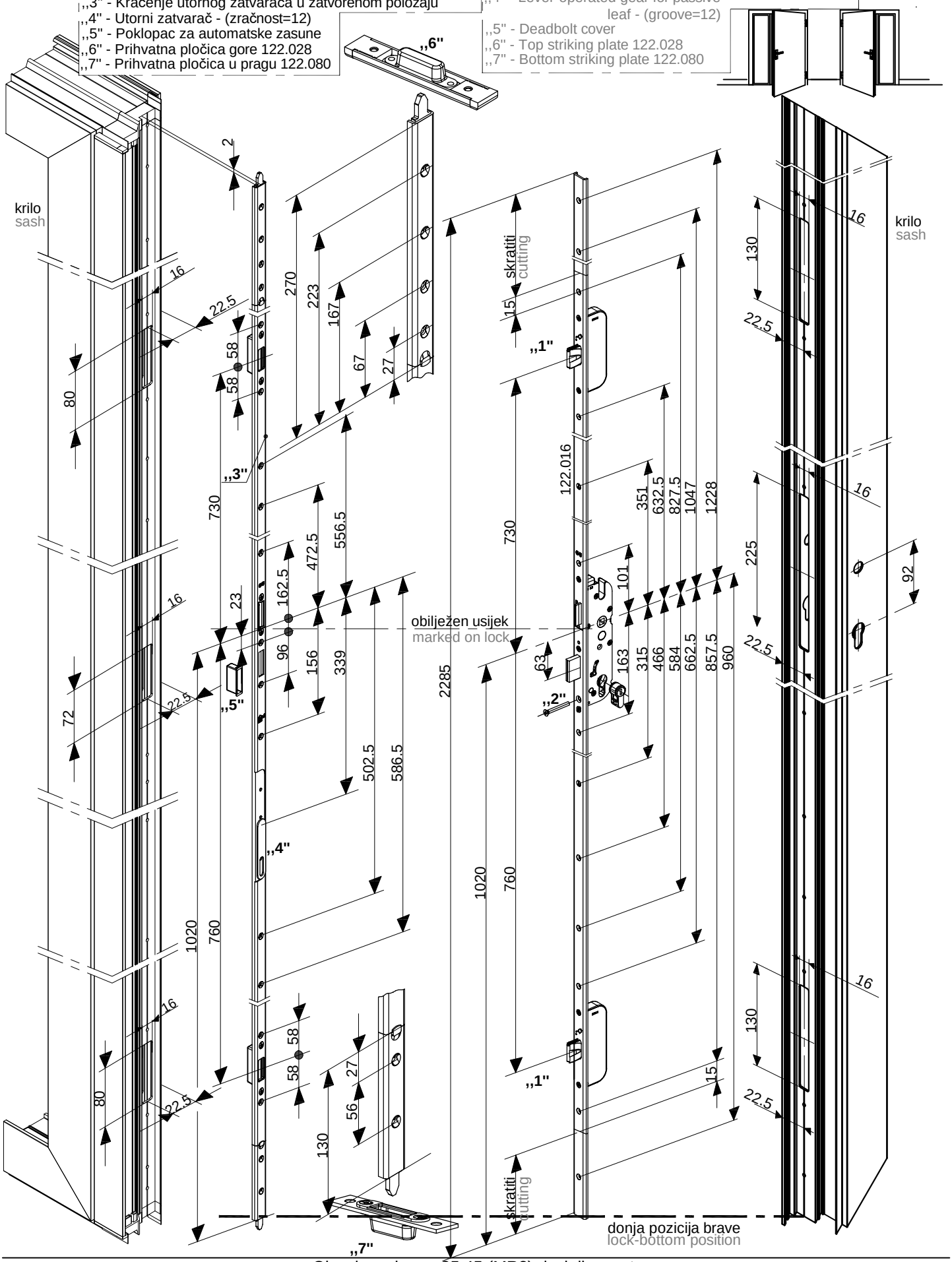
pvc umetak
374.048
add.pvc profile
374.048



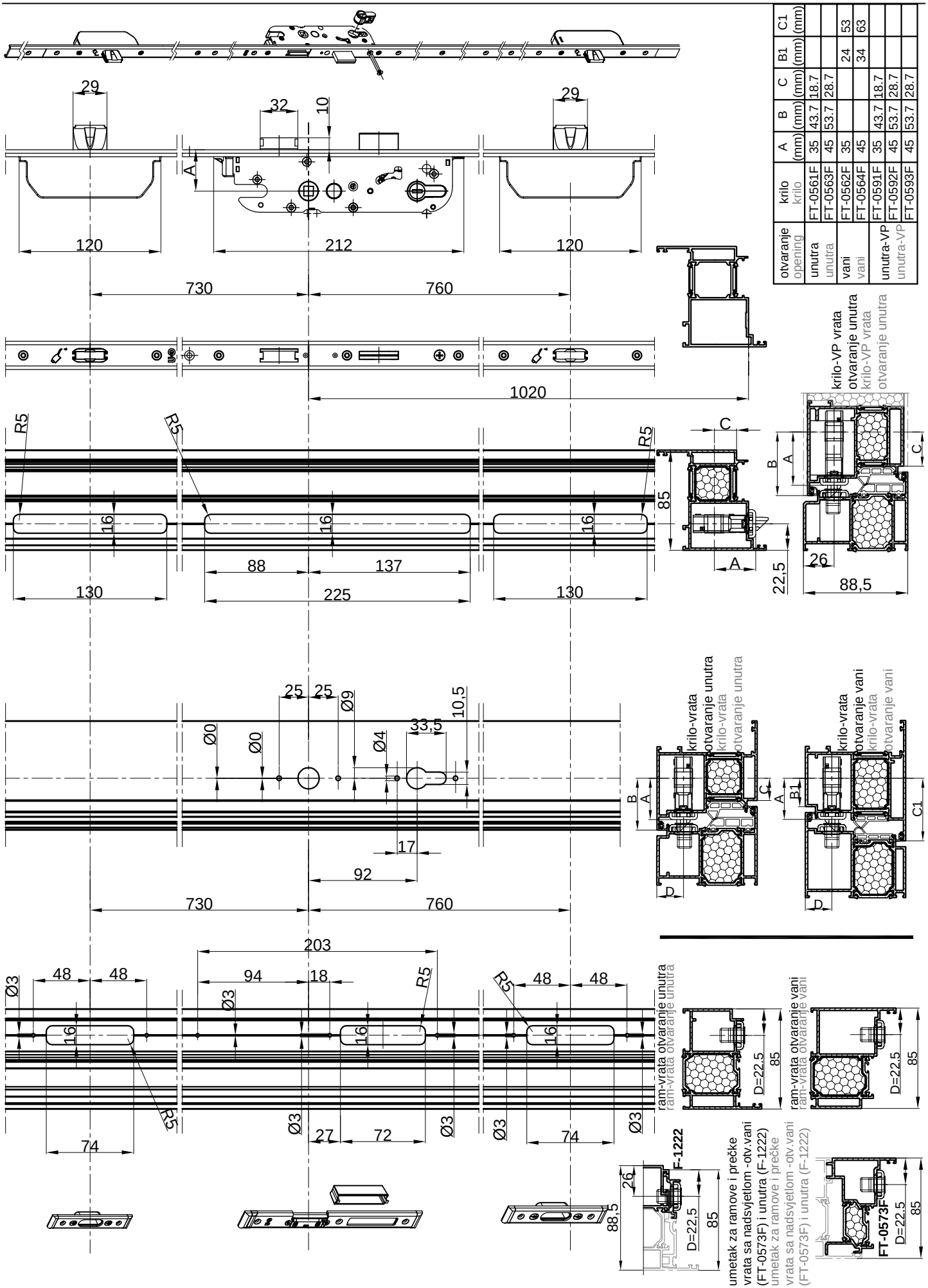

ram
frame
krilo
sash
,,1" - Čeonu stranu zasuna min. 1x godišnje lagano podmazati. Dodatno direktno kod početnog pokretanja
,,2" - PZ-umetak i vijak otkloniti tek nakon ugradnje cilindra
,,3" - Prihvatna pločica ± 1 mm podesiva -122.028
,,4" - Prihvatni lim 24x6 sa podesivim elementom
,,5" - Poklopac za automatske zasune
,,1" - Frontal side of massive bolt min.1x year lubricate
,,2" - PZ-insert and screw remove after montage of the cylinder
,,3" - Striking plate ± 1 mm adjustable -122.028
,,4" - Striking plate 24x6 with adjustable parts
,,5" - Deadbolt cover
skratiti
cutting
obilježen usjek
marked on lock
donja pozicija brave
lock-bottom position
730 ± 1
760 ± 1
2285
1020
760
730
203
72
74
48
22.5
16
94
18
63
101
163
315
466
584
662.5
857.5
960
351
632.5
827.5
1047
1228
225
137
92
29
130
15

,,1" - Čeonu stranu zasuna min. 1x godišnje lagano podmazati. Dodatno direktno kod početnog pokretanja
,,2" - PZ-umetak i vijak tek nakon ugradnje cilindra otkloniti
,,3" - Kraćenje utornog zatvarača u zatvorenom položaju
,,4" - Utorni zatvarač - (zračnost=12)
,,5" - Poklopac za automatske zasune
,,6" - Prihvatna pločica gore 122.028
,,7" - Prihvatna pločica u pragu 122.080

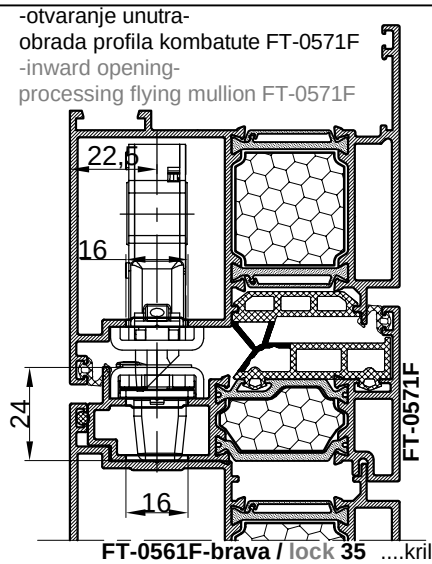
,,1" - Frontal side of massive bolt min.1x year lubricate
,,2" - PZ-insert and screw after montage cylinder removed
,,3" - Cutting lever operated gear in closed position
,,4" - Lever-operated gear for passive leaf - (groove=12)
,,5" - Deadbolt cover
,,6" - Top striking plate 122.028
,,7" - Bottom striking plate 122.080



otvaranje opening	krilo krilo	A (mm)	B (mm)	C (mm)	B1 (mm)	C1 (mm)
unutra unutra	FT-0561F	35	43.7	18.7		
	FT-0563F	45	53.7	28.7		
vani vani	FT-0562F	35			24	53
	FT-0564F	45			34	63
unutra-VP unutra-VP	FT-0591F	35	43.7	18.7		
	FT-0592F	45	53.7	28.7		
	FT-0593F	45	53.7	28.7		

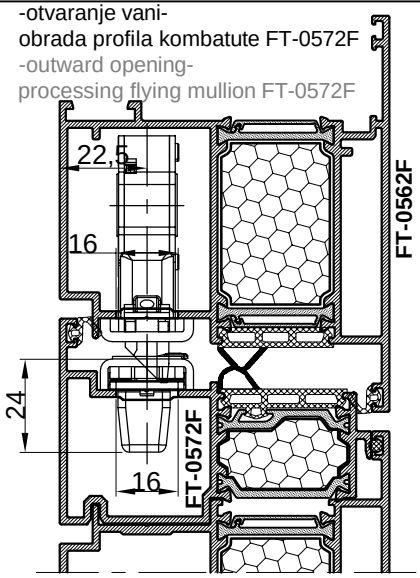


-otvaranje unutra-
obrada profila kombatute FT-0571F
-inward opening-
processing flying mullion FT-0571F



FT-0561F-brava / lock 35 ....krilo/sash
(FT-0563F-brava / lock 45) ....krilo/sash
(FT-0591F-brava / lock 35) ....krilo/sash
(FT-0592F-brava / lock 45) ....krilo/sash
(FT-0593F-brava / lock 45) ....krilo/sash

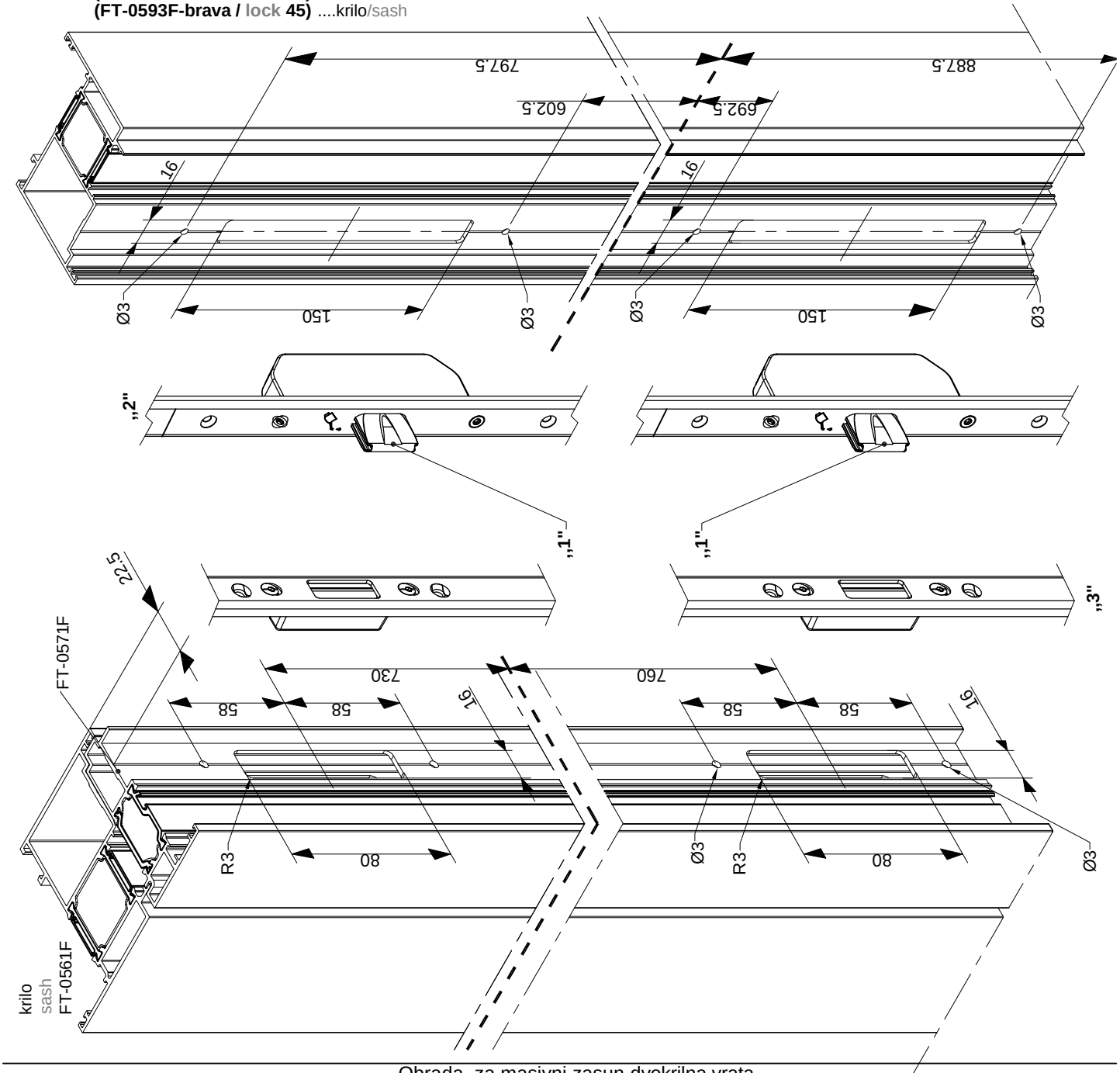
-otvaranje vani-
obrada profila kombatute FT-0572F
-outward opening-
processing flying mullion FT-0572F

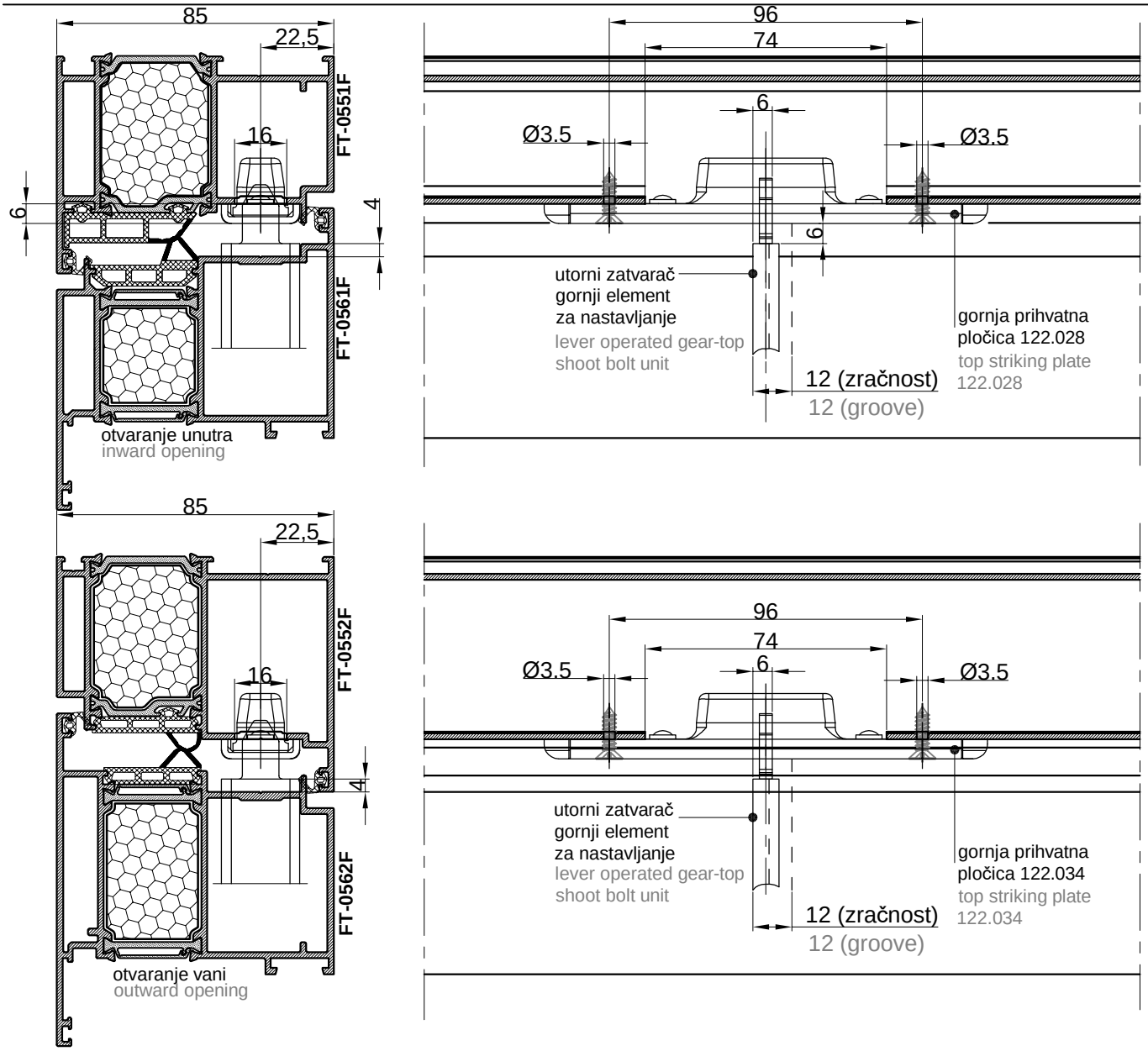


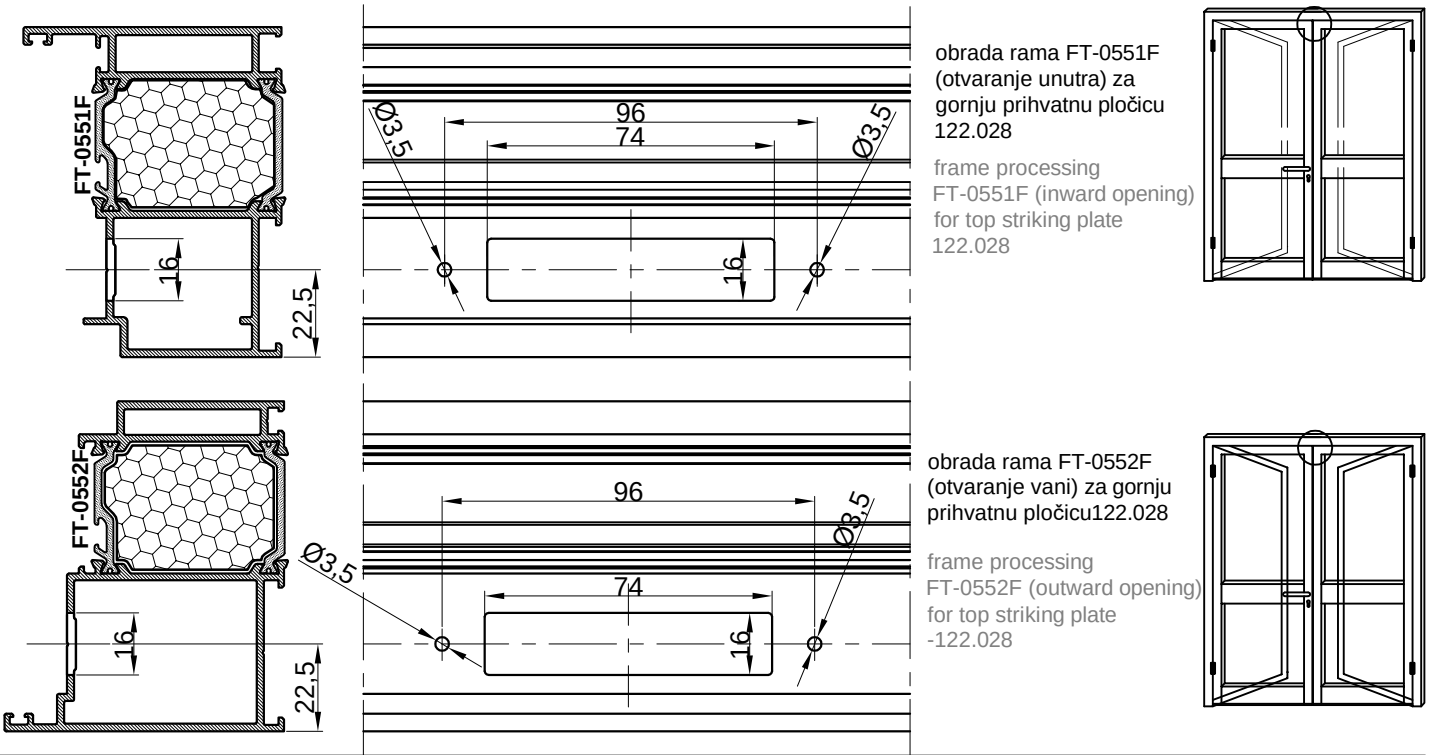
FT-0562F-brava / lock 35 ....krilo/sash
(FT-0564F-brava / lock 45) ....krilo/sash

,,1" - čeonu stranu zasuna min. 1x godišnje lagano podmazati. Dodatno direktno kod početnog pokretanja
,,2" - brava sa masivnim zasunima
,,3" - utorni zatvarač (zračnost=12)
– – obilježen usjek na bravi (osa ručke)

,,1" - Frontal side of massive bolt min.1x year lubricate
,,2" - multipoint lock with massive bolt
,,3" -Lever-operated gear for passive leaf - (groove=12)
– – marked on multipoint lock





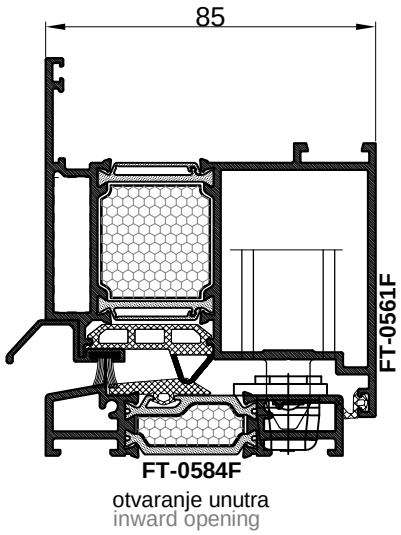


obrada rama FT-0551F (otvaranje unutra) za gornju prihvatnu pločicu 122.028

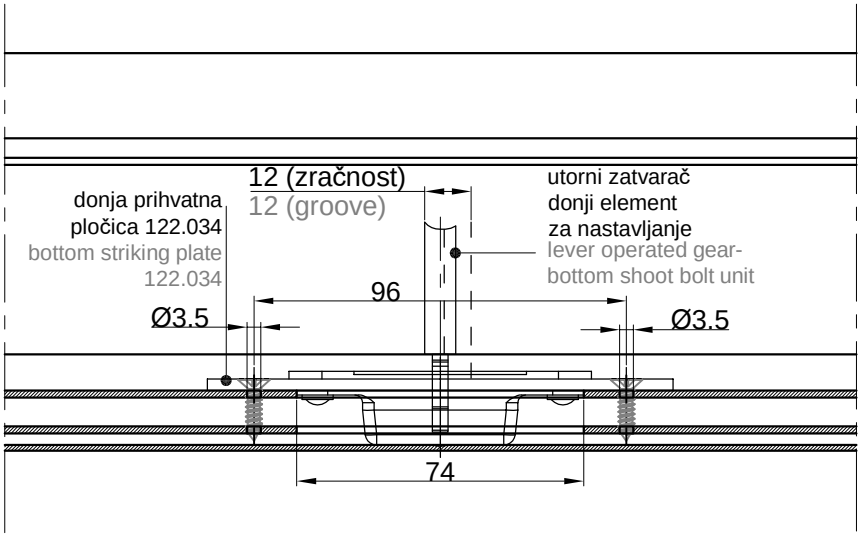
frame processing FT-0551F (inward opening) for top striking plate 122.028

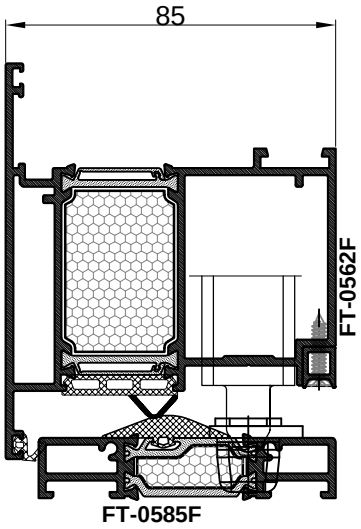
obrada rama FT-0552F (otvaranje vani) za gornju prihvatnu pločicu122.028

frame processing FT-0552F (outward opening) for top striking plate -122.028

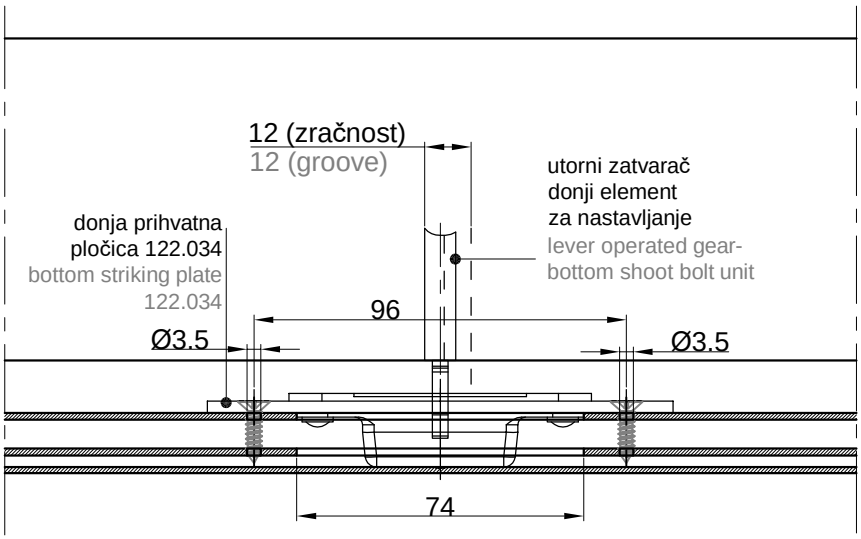


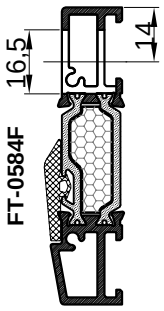
otvaranje unutra
inward opening

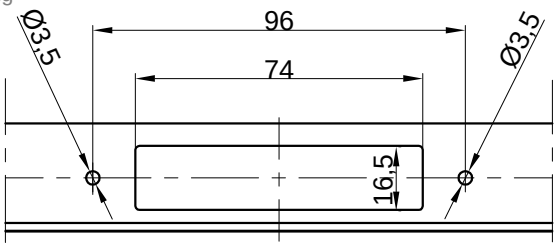




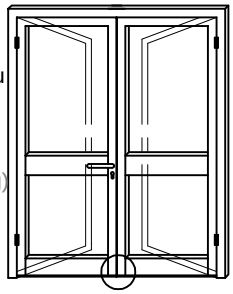
otvaranje vani
outward opening

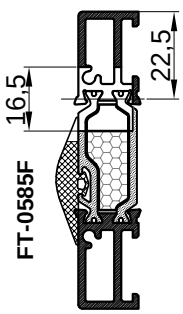


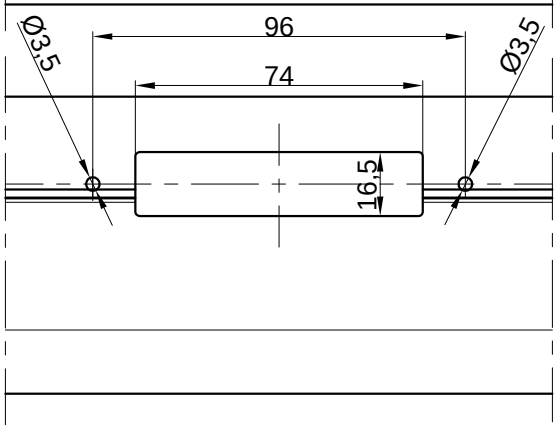




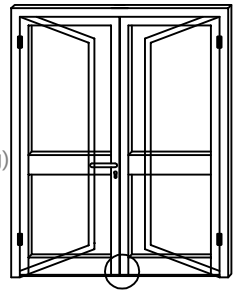
obrada rama FT-0551F (otvaranje unutra) za donju prihvatnu pločicu 122.080
frame processing FT-0551F (inward opening) for bottom striking plate 122.080

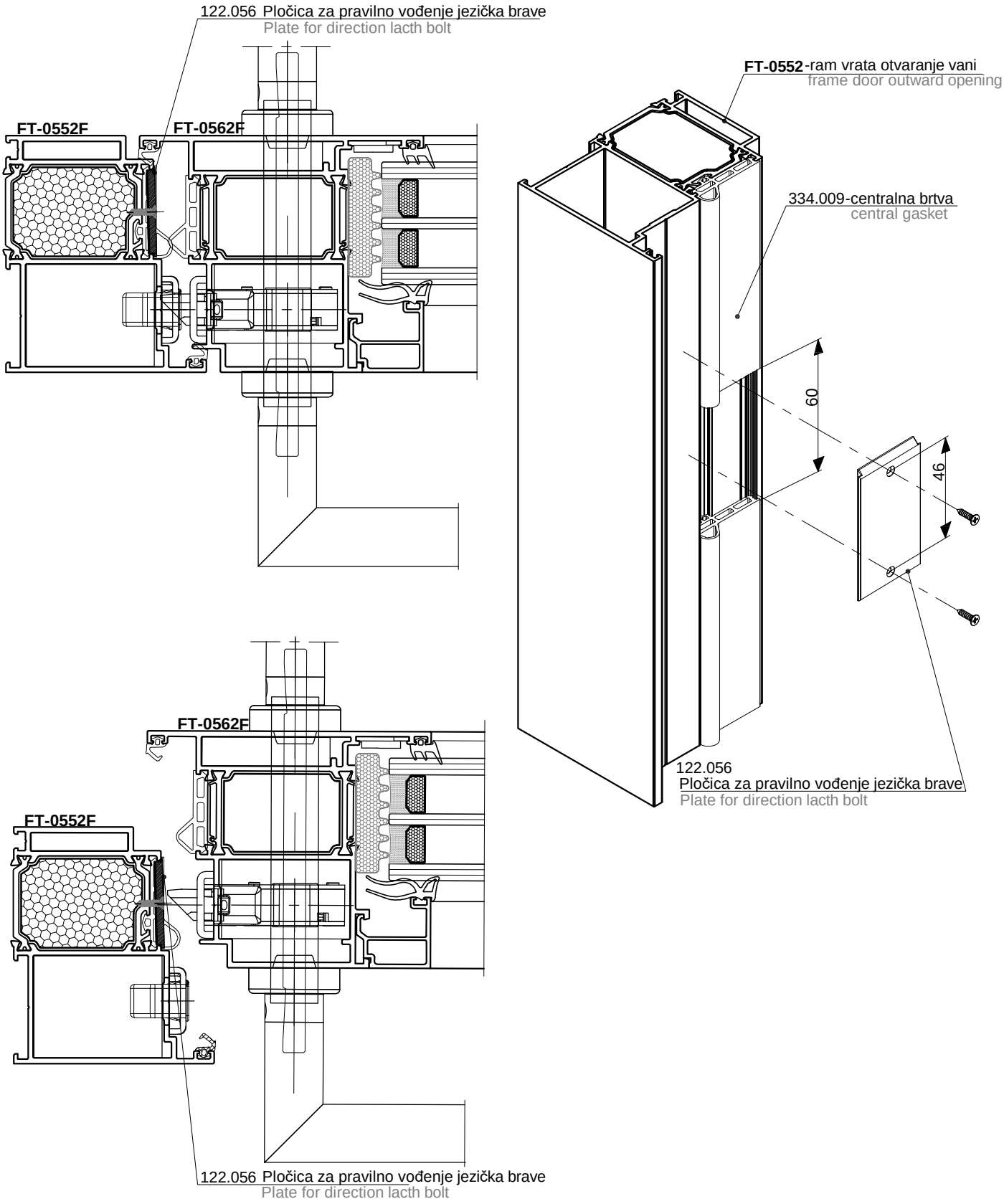


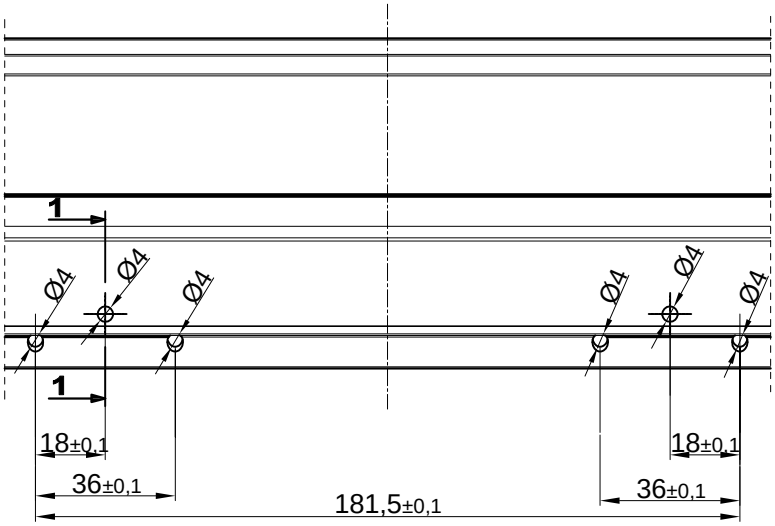


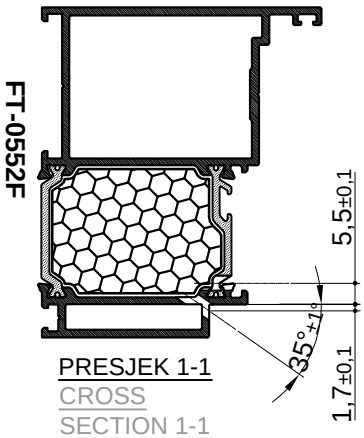


obrada rama FT-0552F (otvaranje vani) za donju prihvatnu pločicu 122.080
frame processing FT-0552F (outward opening) for bottom striking plate 122.080

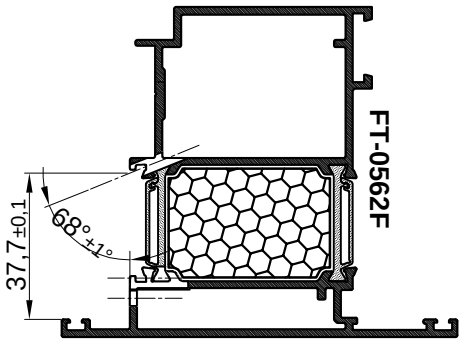



122.056 Pločica za pravilno vođenje jezičke brave
Plate for direction lacth bolt
FT-0552F
FT-0562F
FT-0562F
FT-0552F
122.056 Pločica za pravilno vođenje jezičke brave
Plate for direction lacth bolt
FT-0552-ram vrata otvaranje vani
frame door outward opening
334.009-centralna brtva
central gasket
60
46
122.056
Pločica za pravilno vođenje jezičke brave
Plate for direction lacth bolt

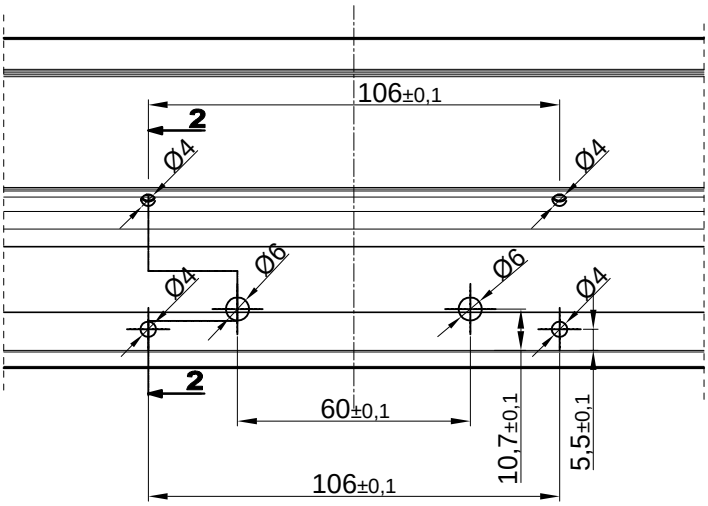


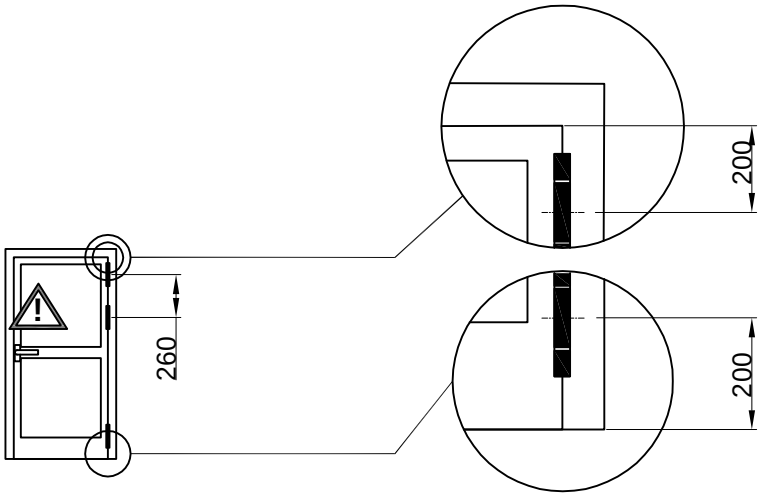


PRESJEK 1-1
CROSS SECTION 1-1



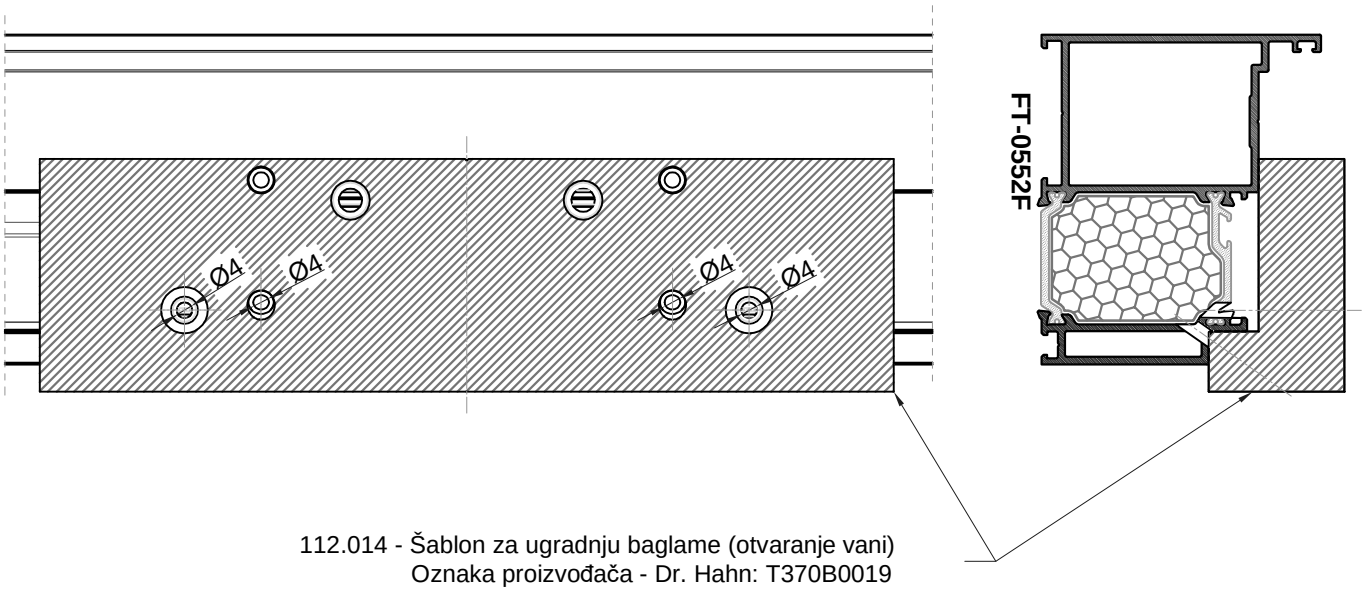
PRESJEK 2-2
CROSS SECTION 2-2



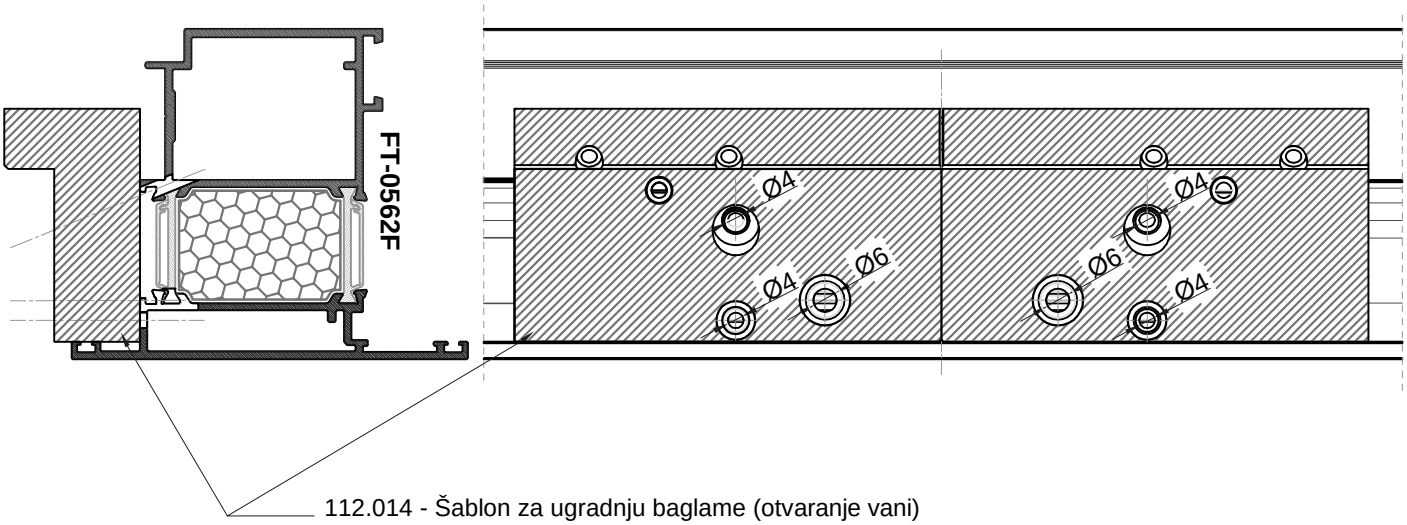


Napomena:
Obrada se vrši isključivo na obradnom centru ili pomoću namijenjenog šablona za obradu (112.014)

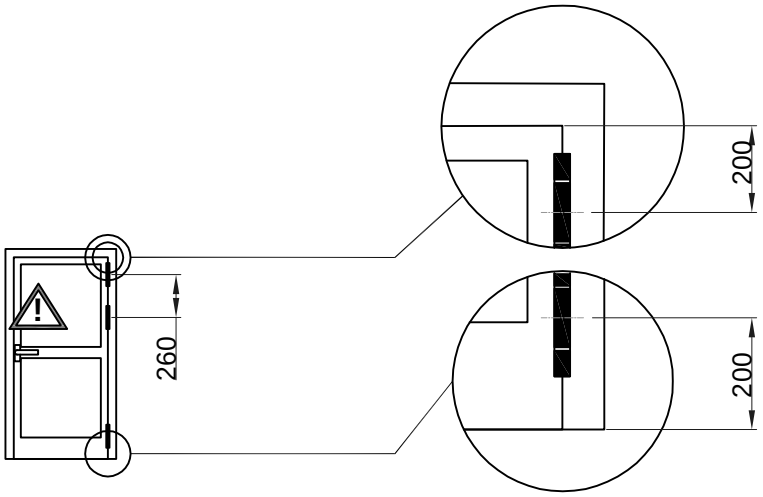
Note:
Processing is carried out exclusively on the machining center or using the intended drilling jig for processing (112.014)



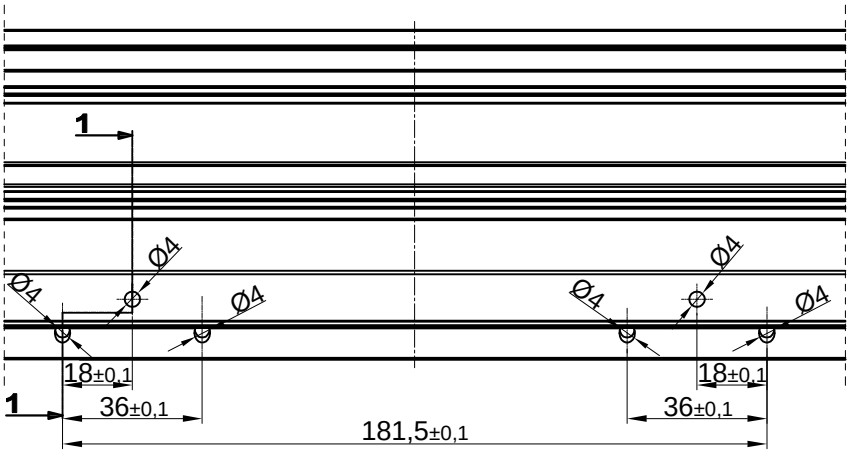
112.014 - Šablon za ugradnju baglame (otvaranje vani)
Oznaka proizvođača - Dr. Hahn: T370B0019
112.014 - Drilling jig for mounting of hinge (outward opening)
Manufacturer code - Dr. Hahn: T370B0019

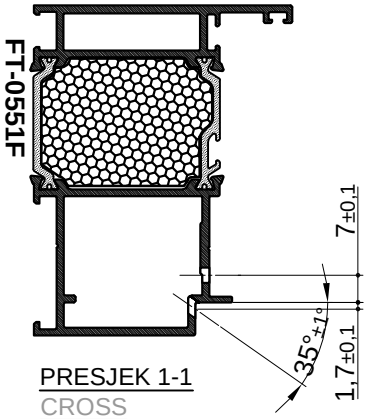


112.014 - Šablon za ugradnju baglame (otvaranje vani)
Oznaka proizvođača - Dr. Hahn: T370B0019
112.014 - Drilling jig for mounting of hinge (outward opening)
Manufacturer code - Dr. Hahn: T370B0019

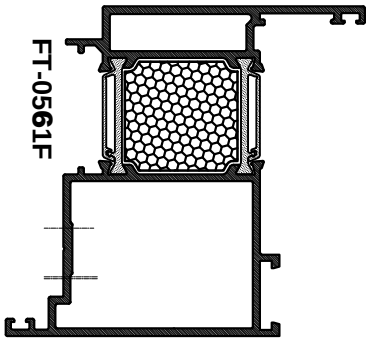


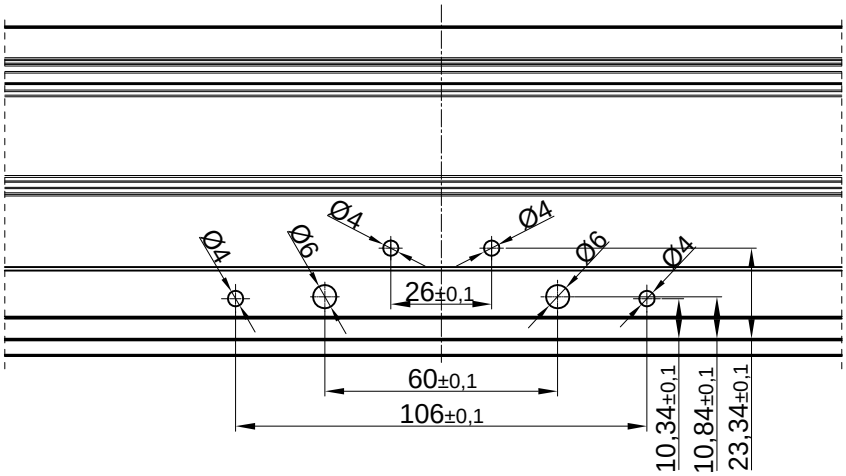
Napomena:
Obrada se vrši isključivo na obradnom centru ili pomoću namijenjenog šablona za obradu (112.014)
Note:
Processing is carried out exclusively on the machining center or using the intended drilling jig for processing (112.014)

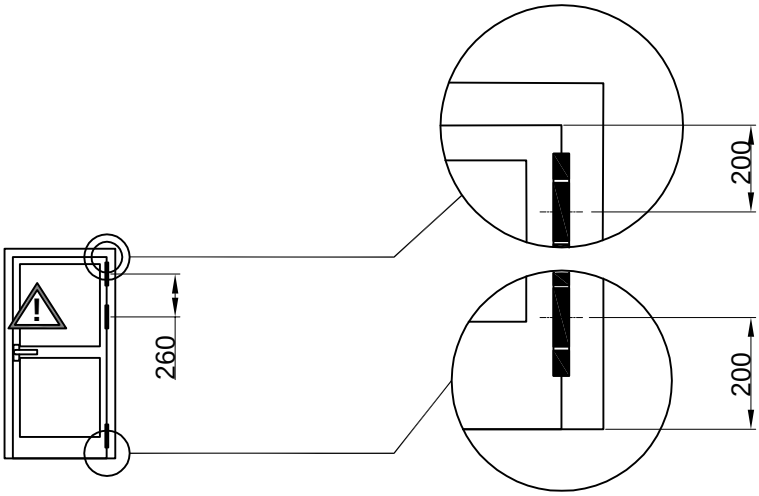




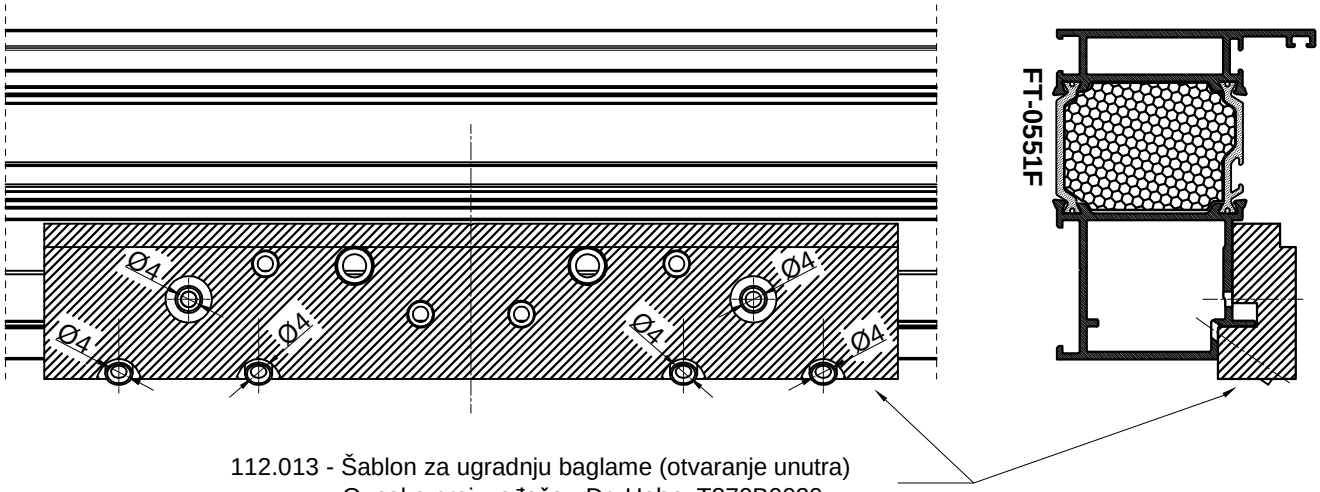
PRESJEK 1-1
CROSS SECTION 1-1



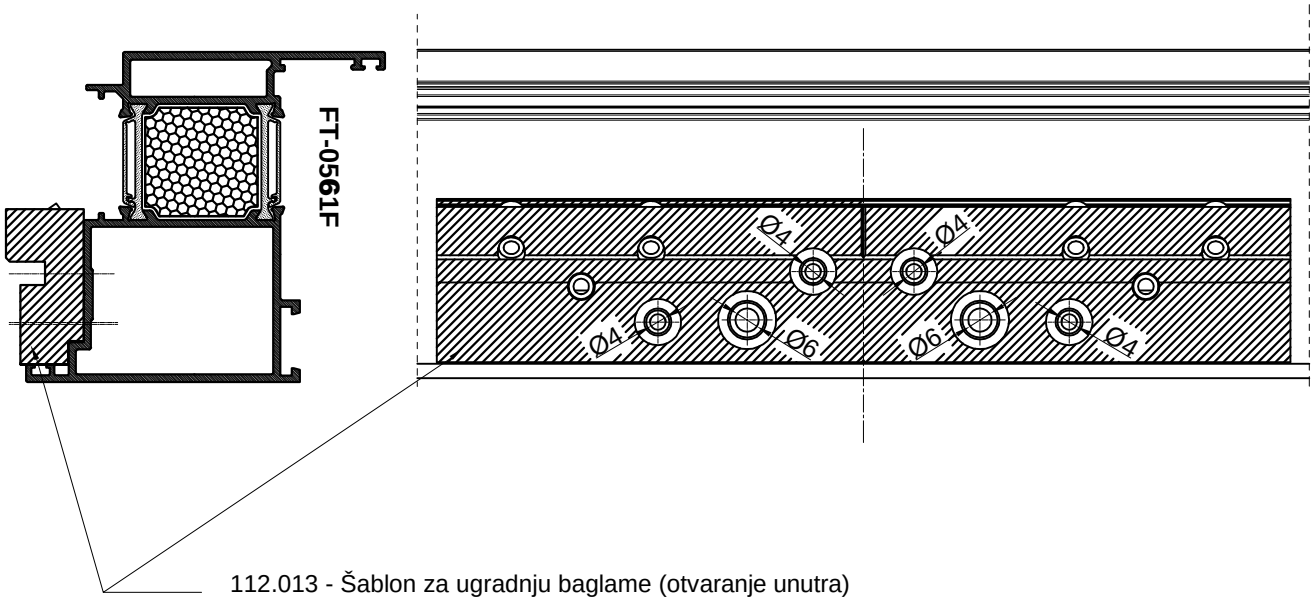




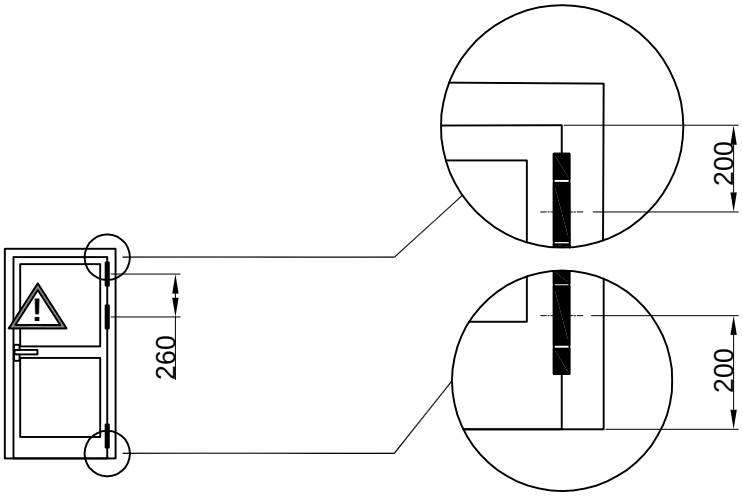
Napomena:
Obrada se vrši isključivo na obradnom centru ili pomoću namijenjenog šablona za obradu (112.013)
Remark:
Processing is carried out exclusively on the machining center or using the intended drilling jig for processing (112.013)



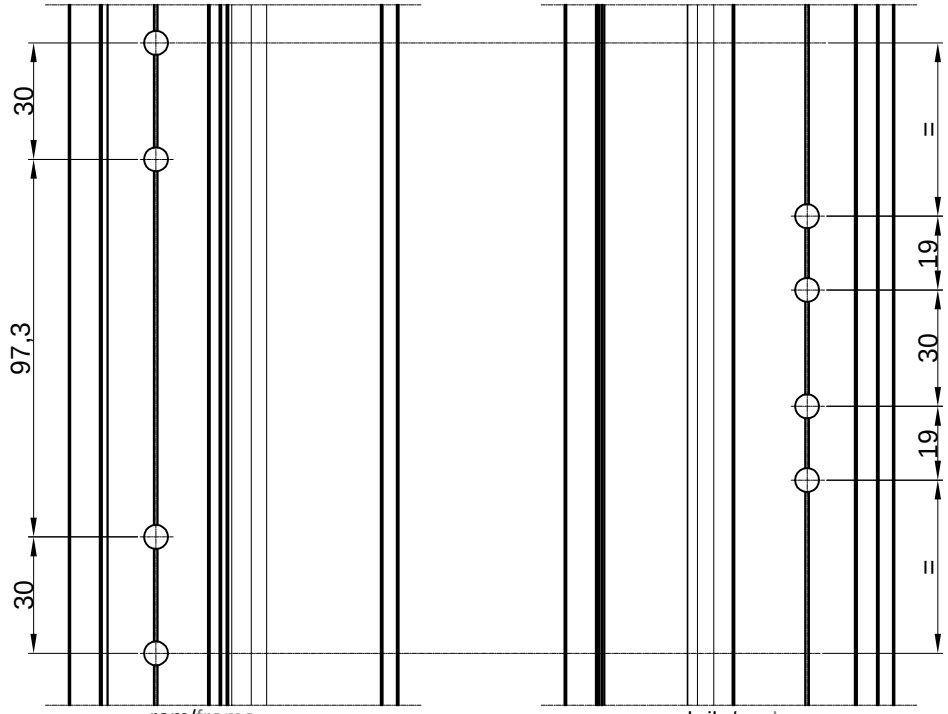
112.013 - Šablon za ugradnju baglame (otvaranje unutra)
Oznaka proizvođača - Dr. Hahn: T370B0020
112.013 - Drilling jig for mounting of hinge (inward opening)
Manufacturer code - Dr. Hahn: T370B0020

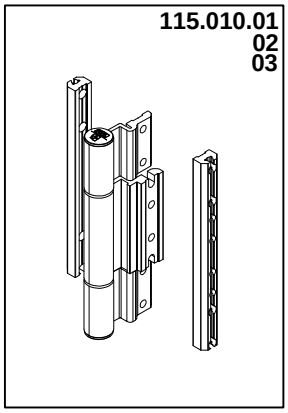


112.013 - Šablon za ugradnju baglame (otvaranje unutra)
Oznaka proizvođača - Dr. Hahn: T370B0020
112.013 - Drilling jig for mounting of hinge (inward opening)
Manufacturer code - Dr. Hahn: T370B0020



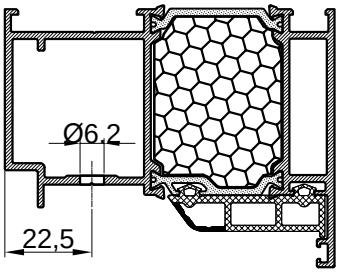
Napomena:
Obrada se vrši isključivo na obradnom centru ili pomoću namijenjenog šablona za obradu (112.013)
Remark:
Processing is carried out exclusively on the machining center or using the intended drilling jig for processing (112.013)



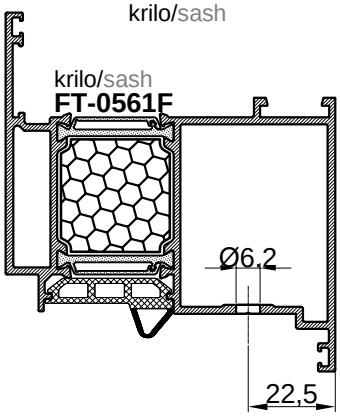


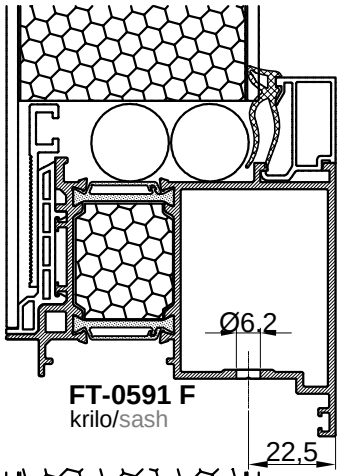
- Cilindrična šarka FEAL-GIESE za vrata Termo 85 VS i VP otvaranje unutra
- Barrel door hinge FEAL-GIESE for Termo 85 VS i VP inward opening

ram/frame
FT-0551F



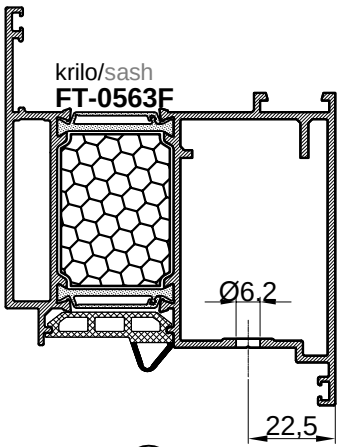
krilo/sash
FT-0561F

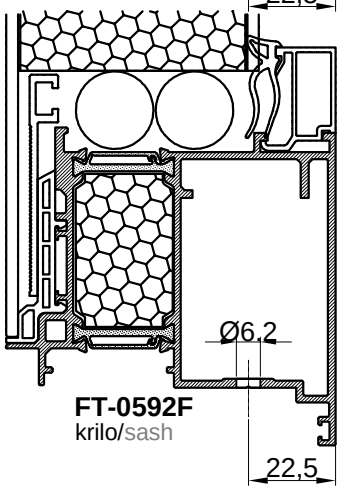




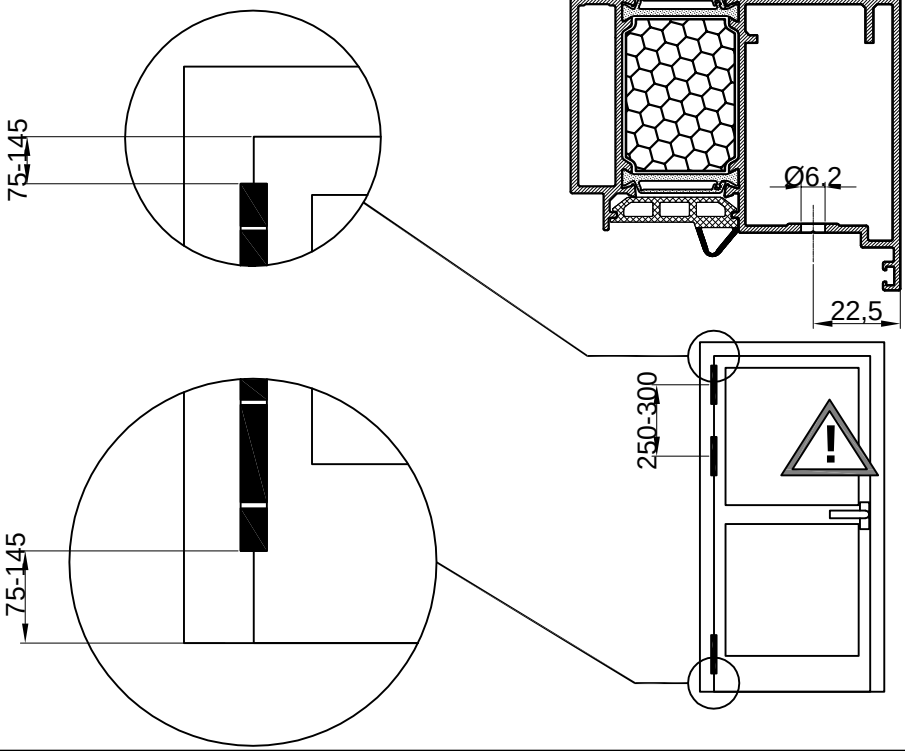
FT-0591 F
krilo/sash

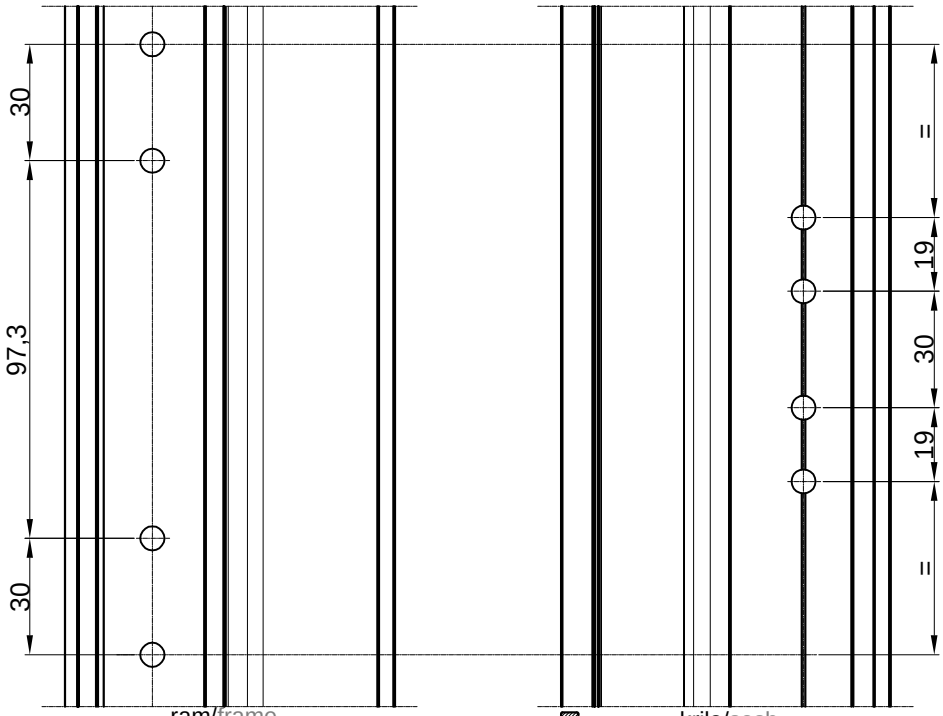
krilo/sash
FT-0563F

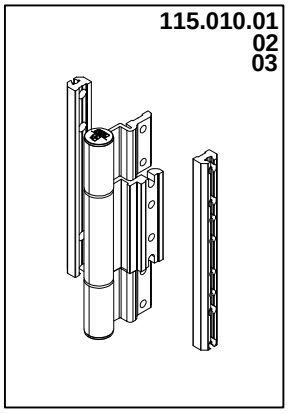




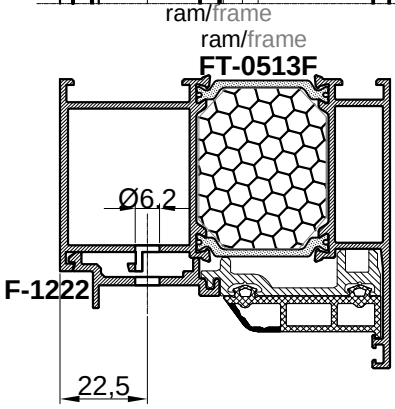
FT-0592F
krilo/sash

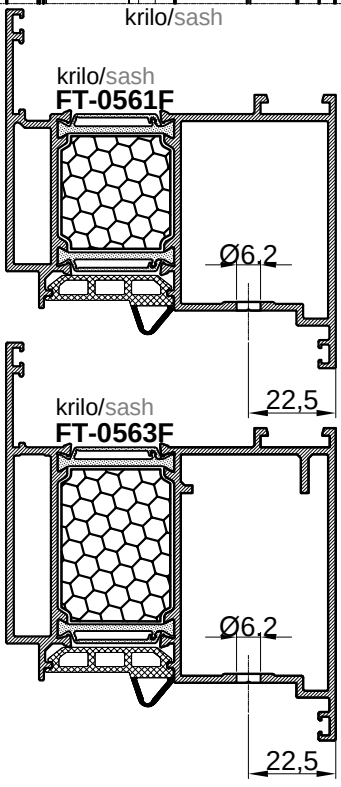


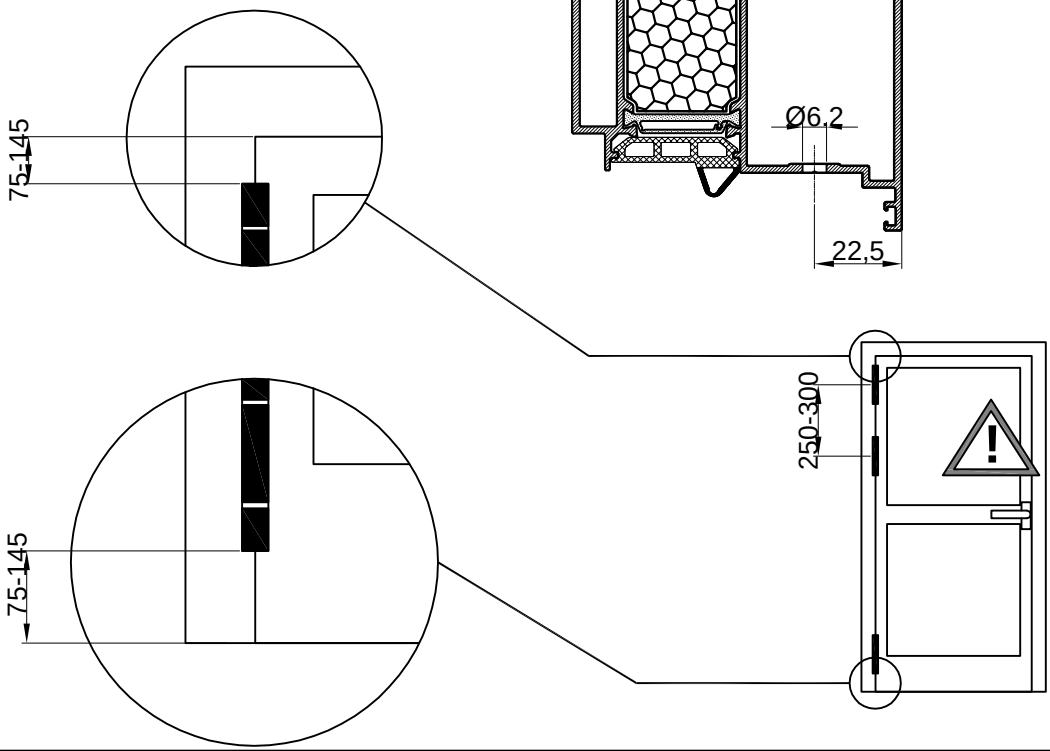




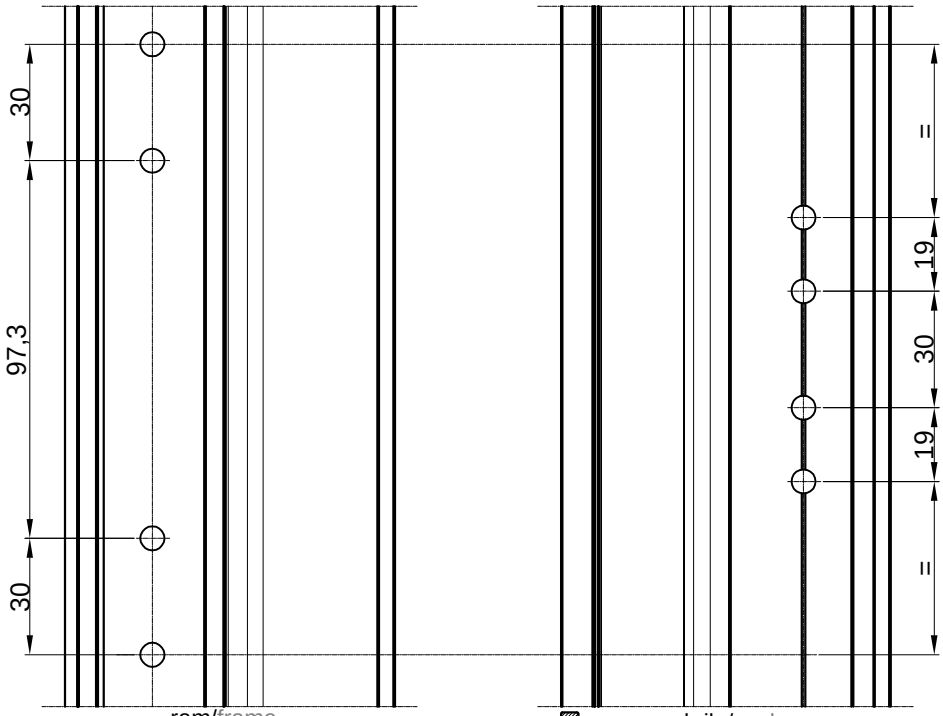
- Cilindrična šarka FEAL-GIESE za vrata Termo 85 VS i VP otvaranje unutra
- Barrel door hinge FEAL-GIESE for Termo 85 VS i VP inward opening

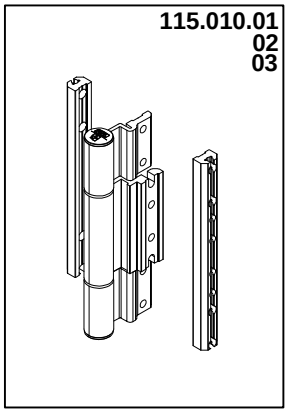




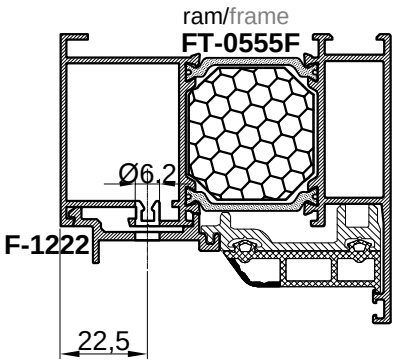


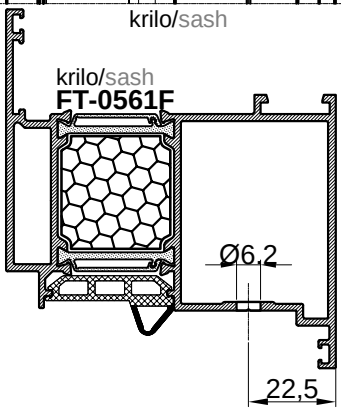
Obrada za šarke-otvaranje unutra
Processing for barrel door hinge-inward opening

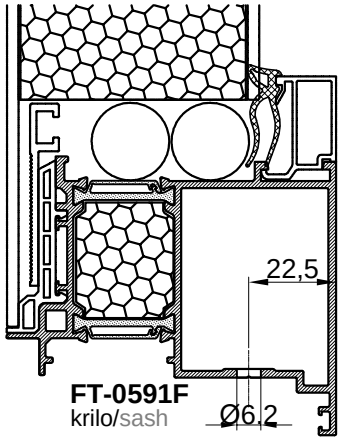


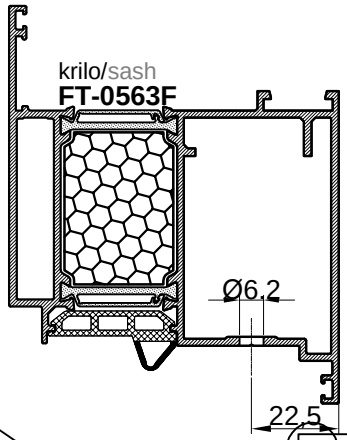


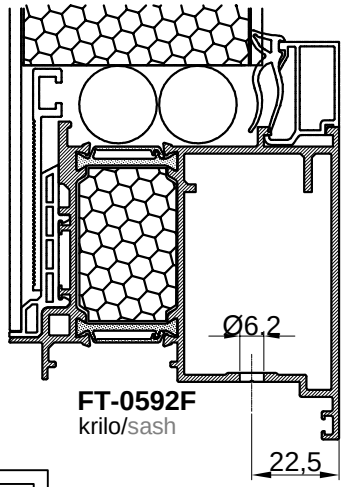
- Cilindrična šarka FEAL-GIESE za vrata Termo 85 VS i VP otvaranje unutra
- Barrel door hinge FEAL-GIESE for Termo 85 VS i VP inward opening

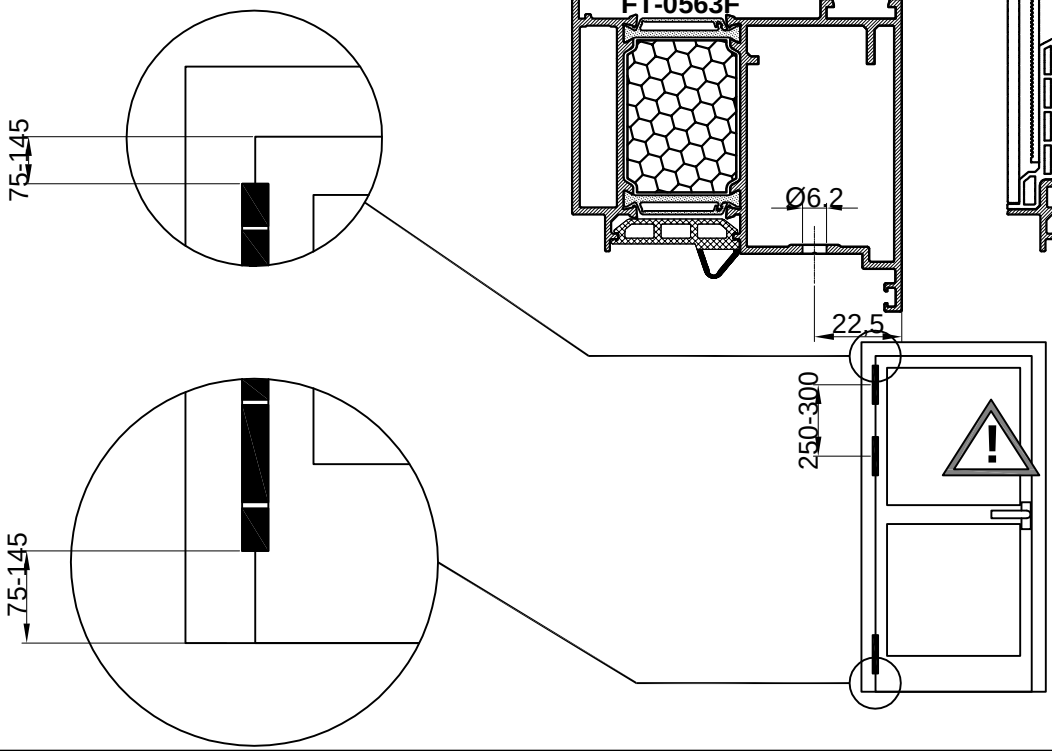




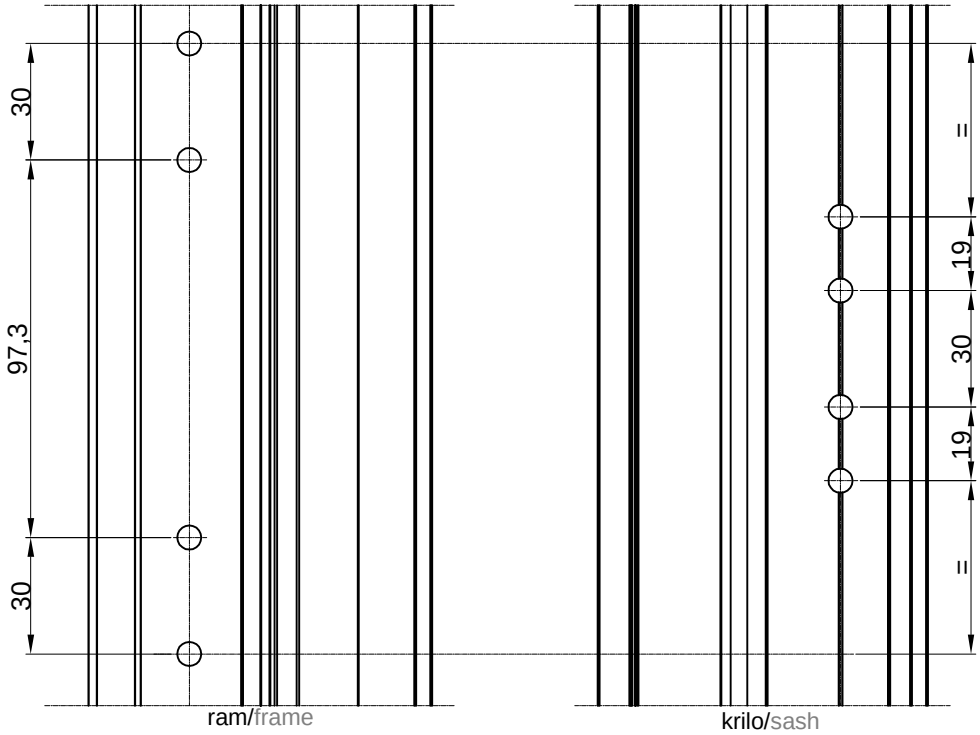


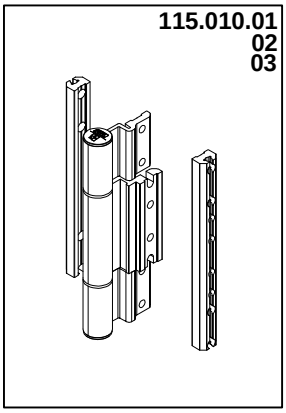




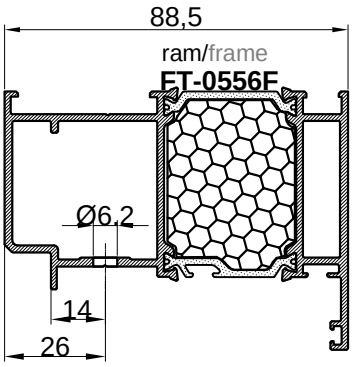


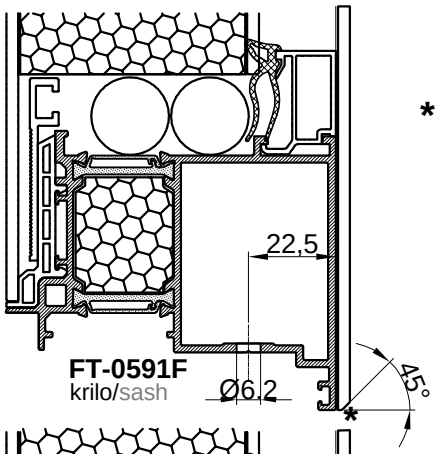
Obrada za šarke-otvaranje unutra
Processing for barrel door hinge-inward opening



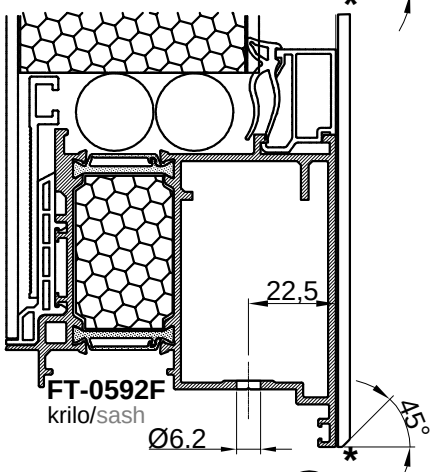


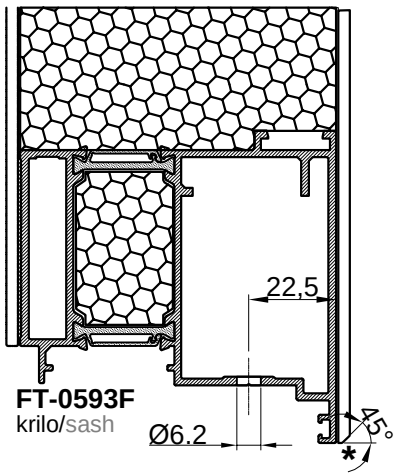
- Cilindrična šarka FEAL-GIESE za vrata Termo 85 VS i VP otvaranje unutra
- Barrel door hinge FEAL-GIESE for Termo 85 VS i VP inward opening

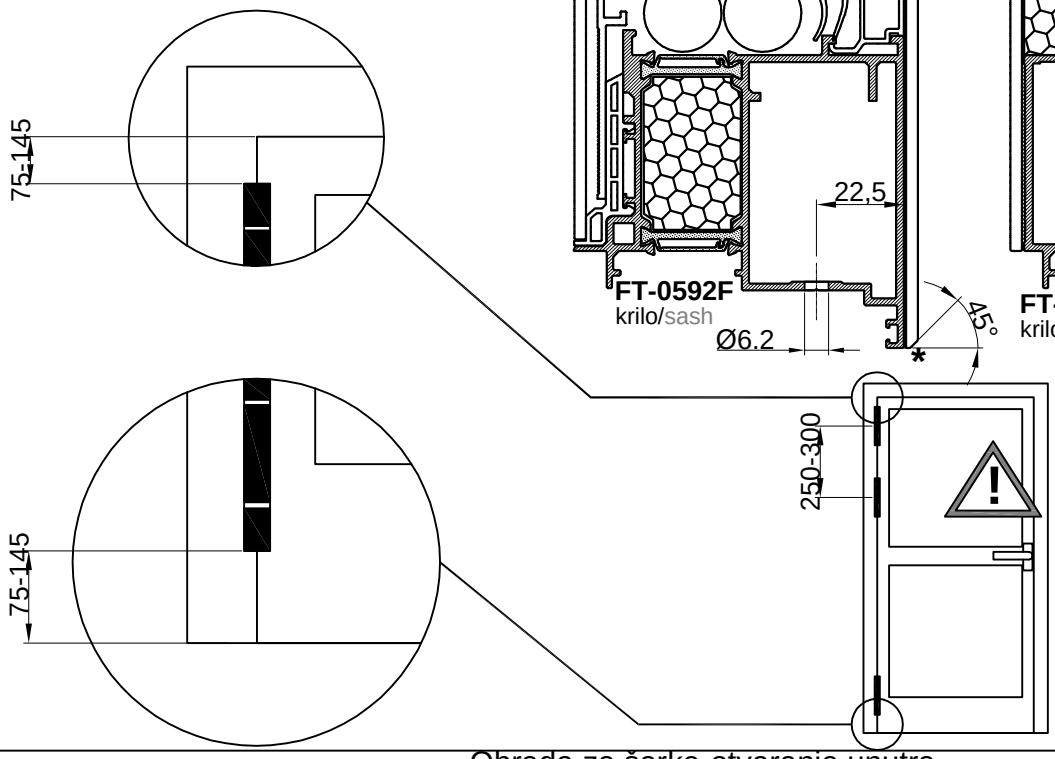




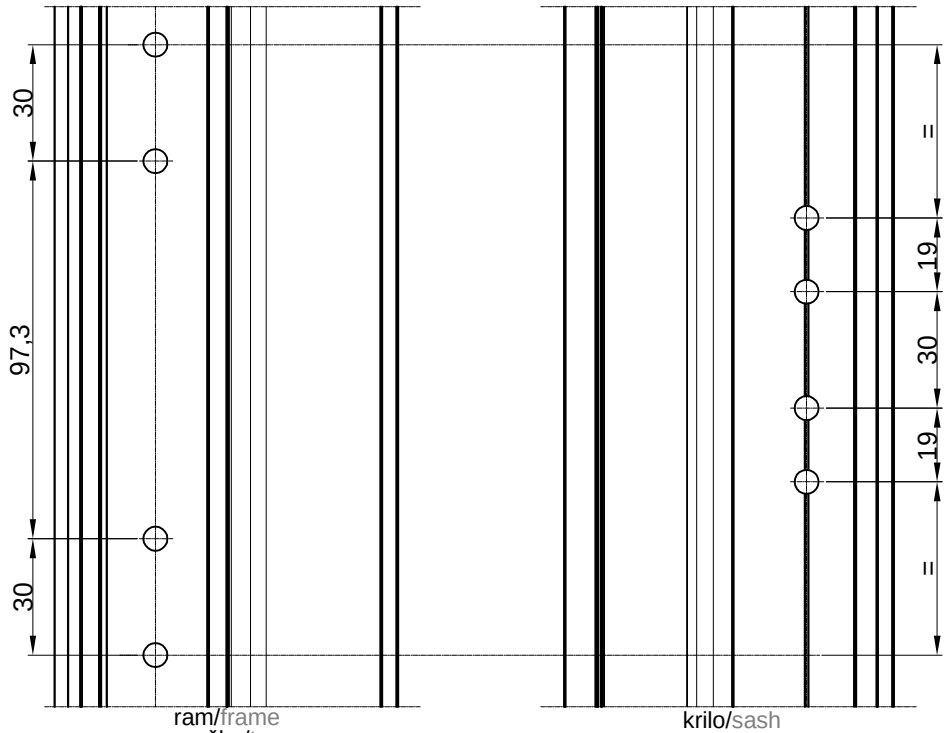
* obraditi unutarnji lim na dijelu gdje šarka ide na krilo - za prihvat šarke
processing interior sheet-the part where the hinge touch sash





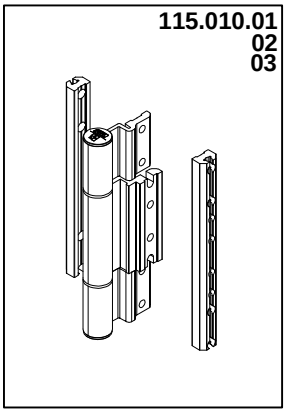


Obrada za šarke-otvaranje unutra
Processing for barrel door hinge-inward opening

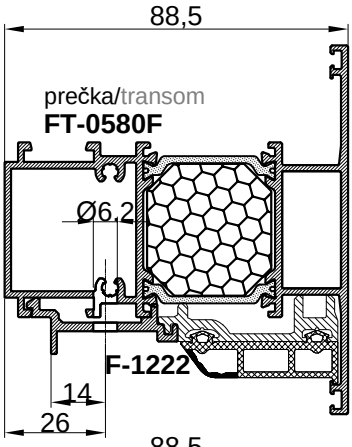


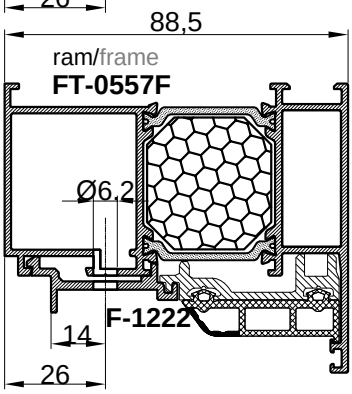
ram/frame
prečka/transom

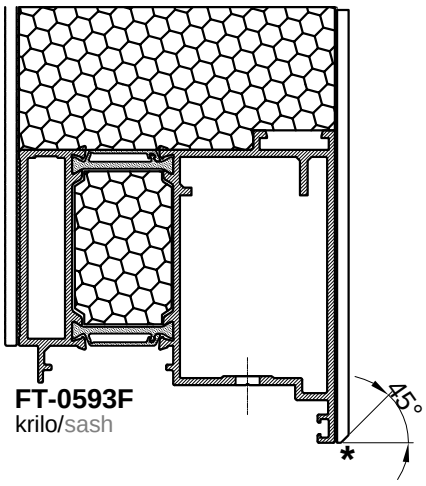
krilo/sash



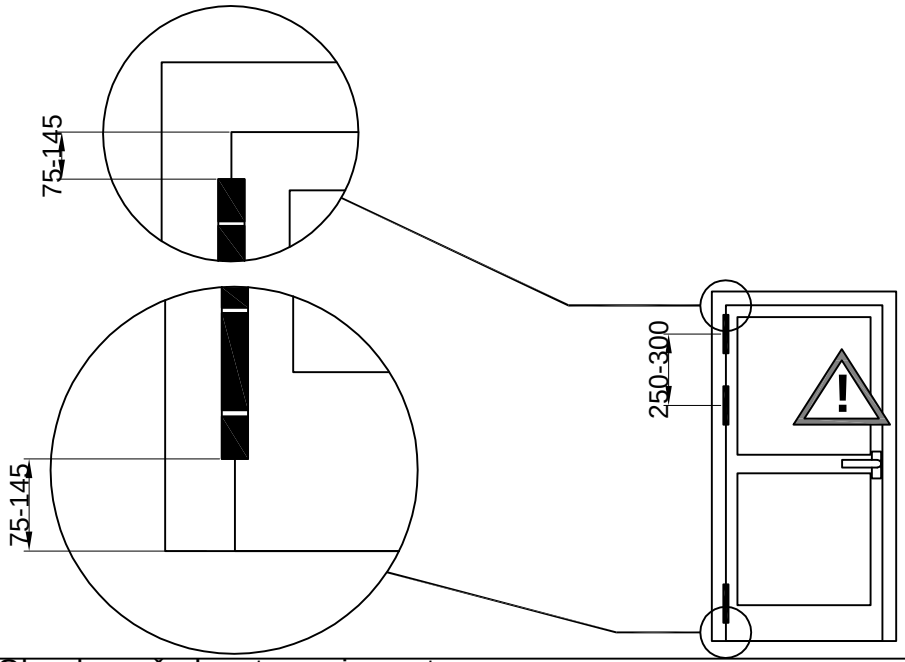
- Cilindrična šarka FEAL-GIESE za vrata Termo 85 VS i VP otvaranje unutra
- Barrel door hinge FEAL-GIESE for Termo 85 VS i VP inward opening



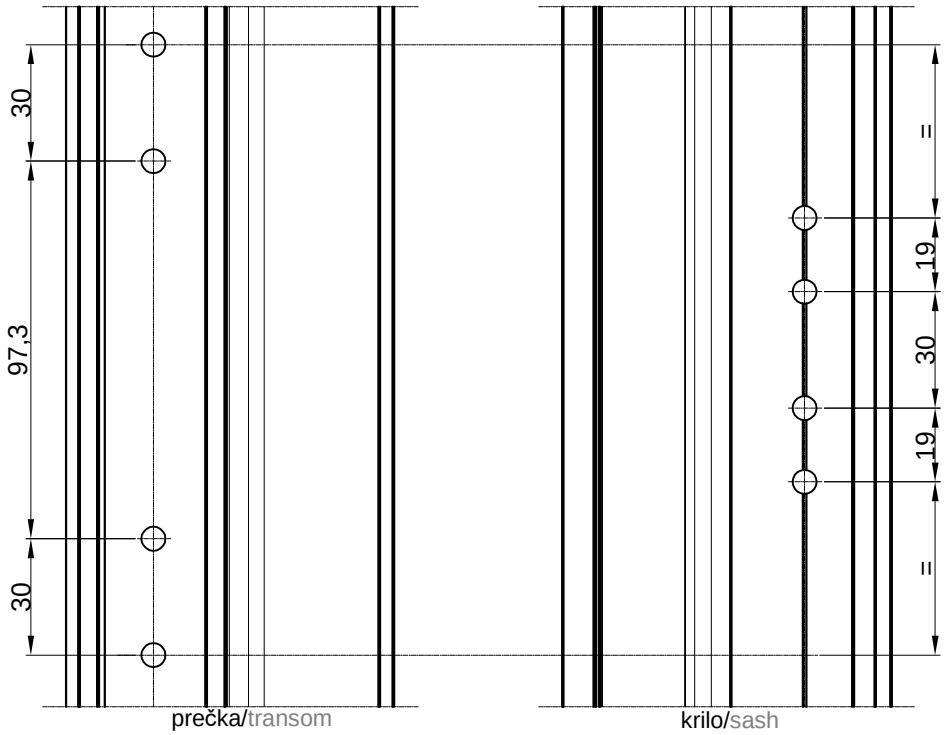


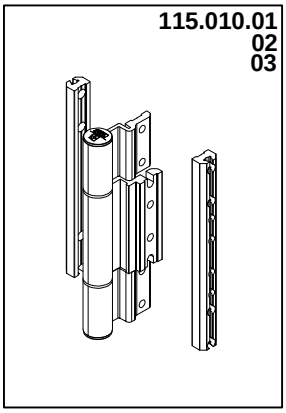


* obraditi unutarnji lim na dijelu gdje šarka ide na krilo - za prihvat šarke
processing interior sheet-the part where the hinge touch sash

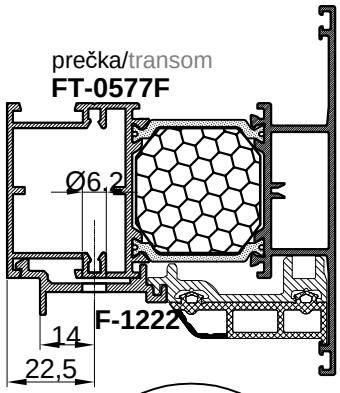


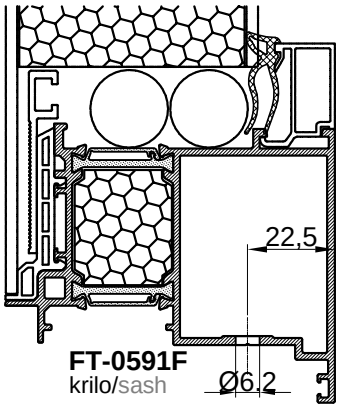
Obrada za šarke-otvaranje unutra
Processing for barrel door hinge-inward opening

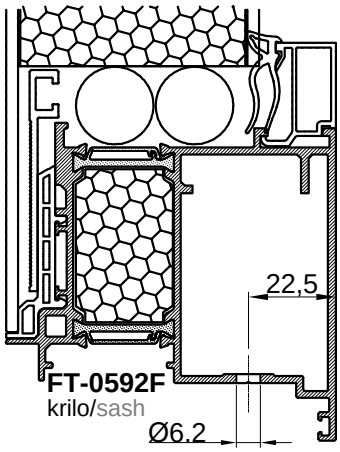


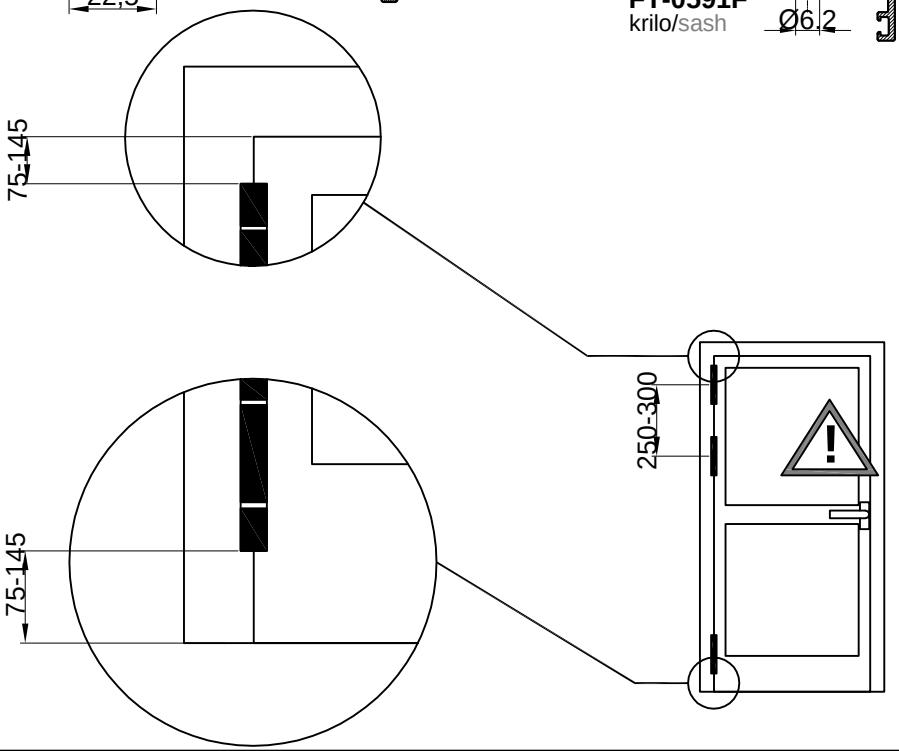


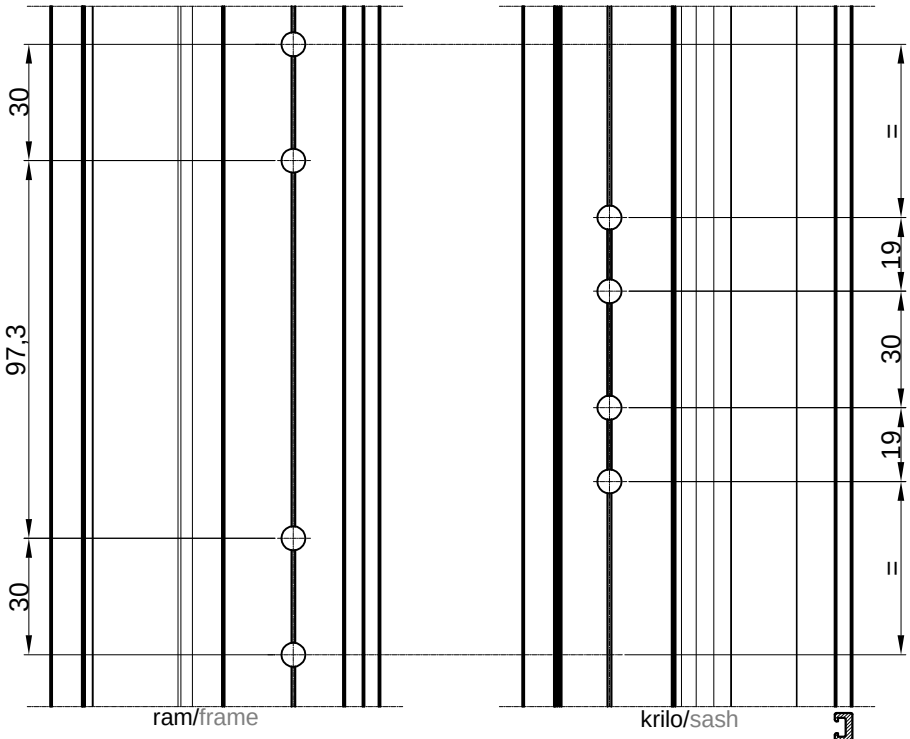
- Cilindrična šarka FEAL-GIESE za vrata Termo 85 VS i VP otvaranje unutra
- Barrel door hinge FEAL-GIESE for Termo 85 VS i VP inward opening

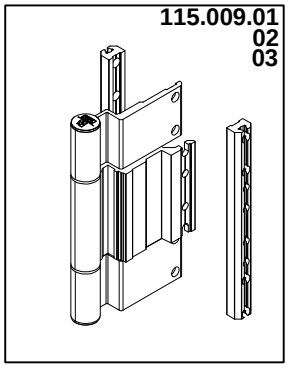




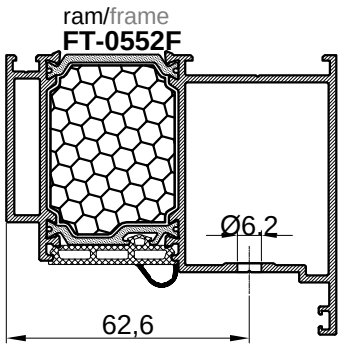


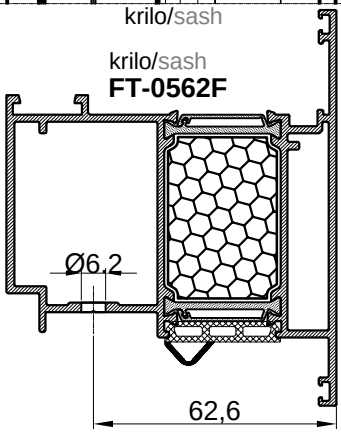


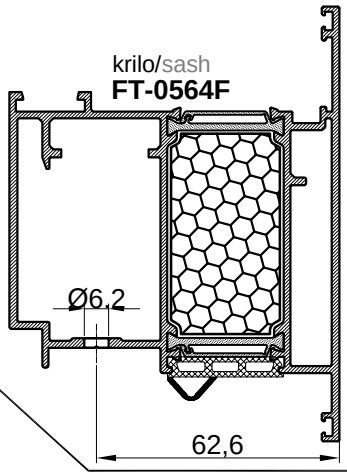


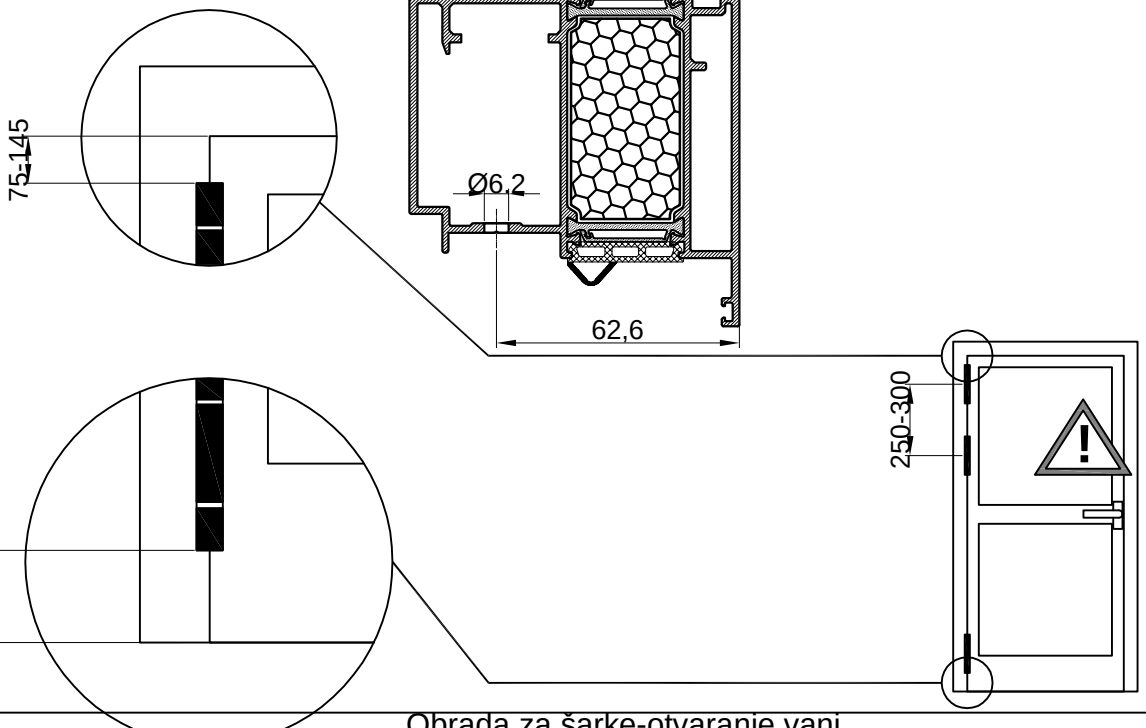


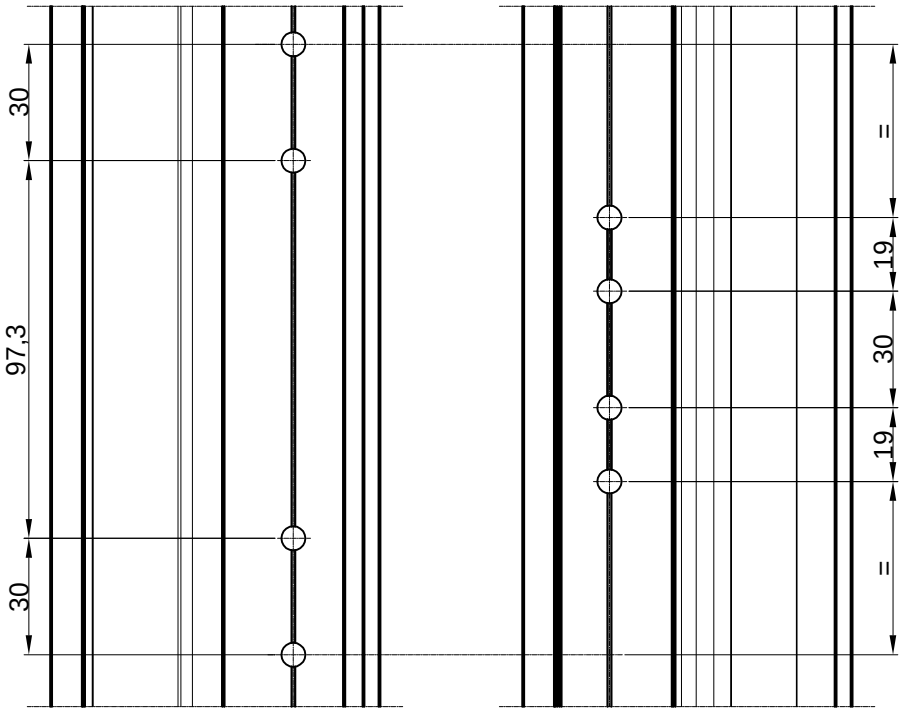
- Cilindrična šarka FEAL-GIESE
  za vrata Termo 85 VS i VP otvaranje vani
- Barrel door hinge FEAL-GIESE
  for Termo 85 VS i VP
  outward opening

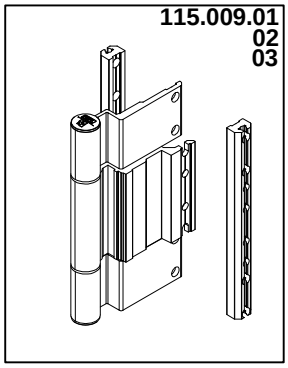




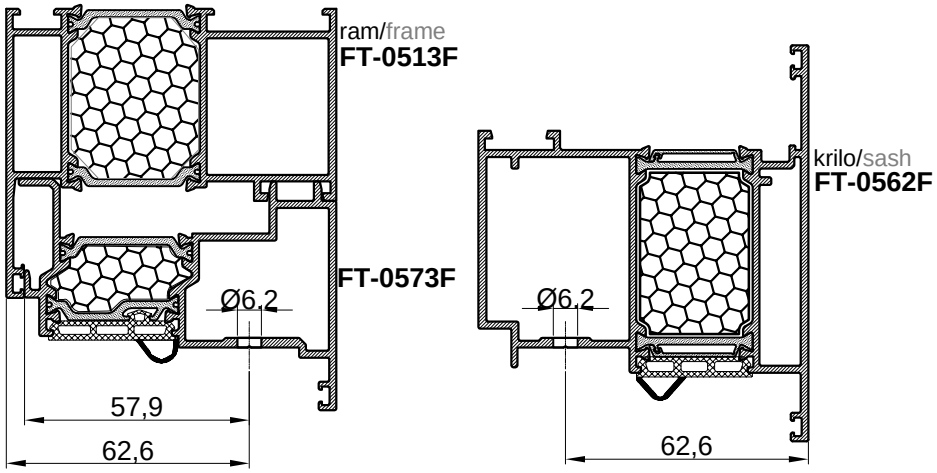


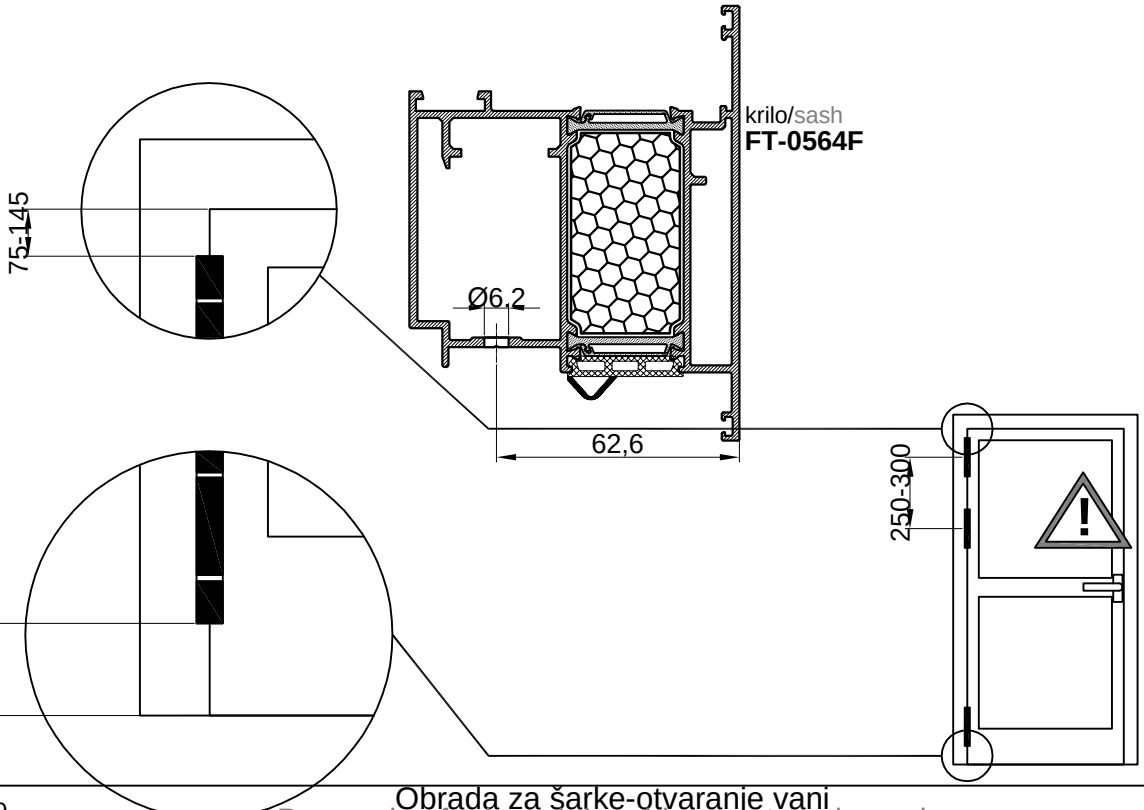


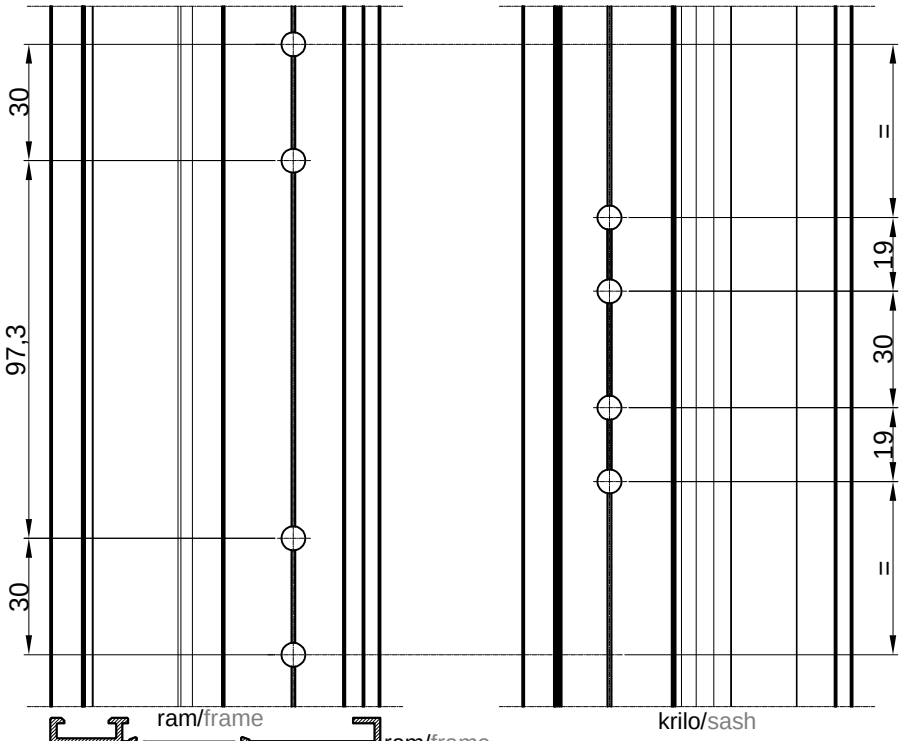


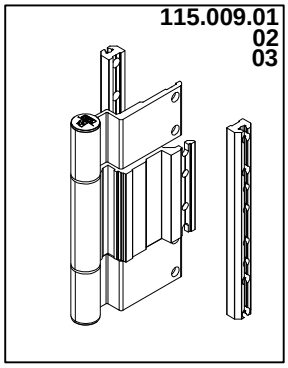


- Cilindrična šarka FEAL-GIESE
  za vrata Termo 85 VS i VP otvaranje vani
- Barrel door hinge FEAL-GIESE
  for Termo 85 VS i VP
  outward opening

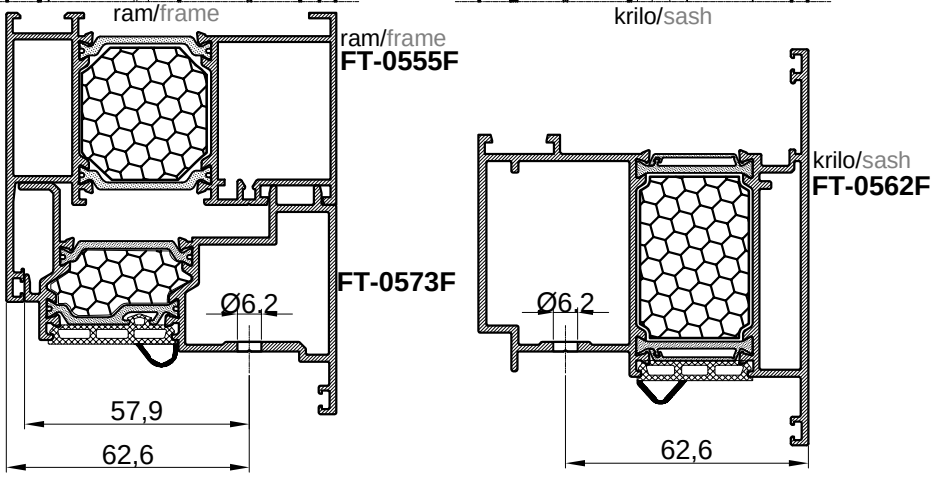


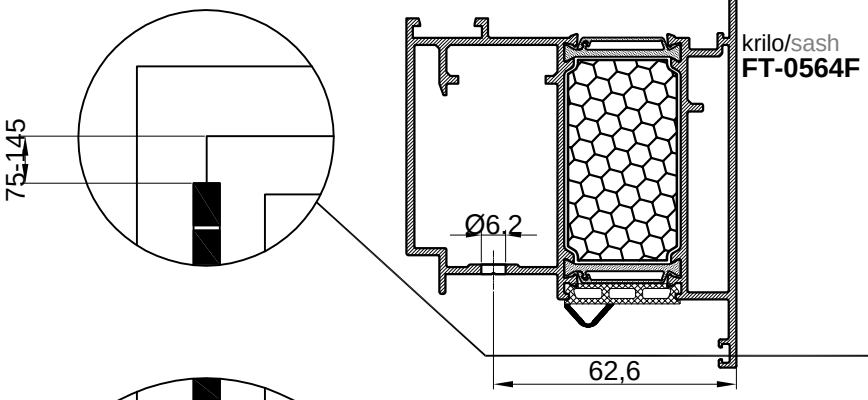




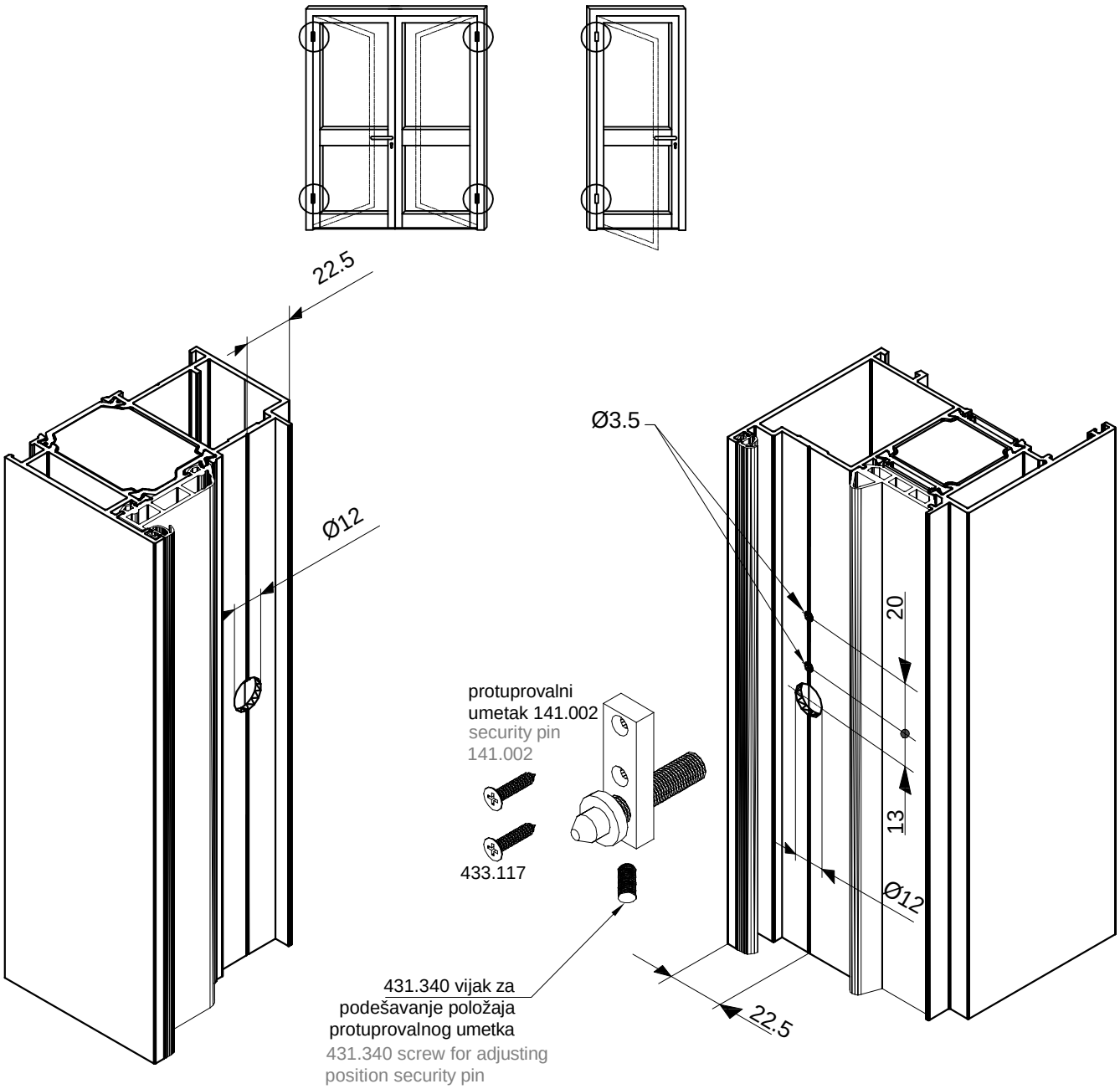


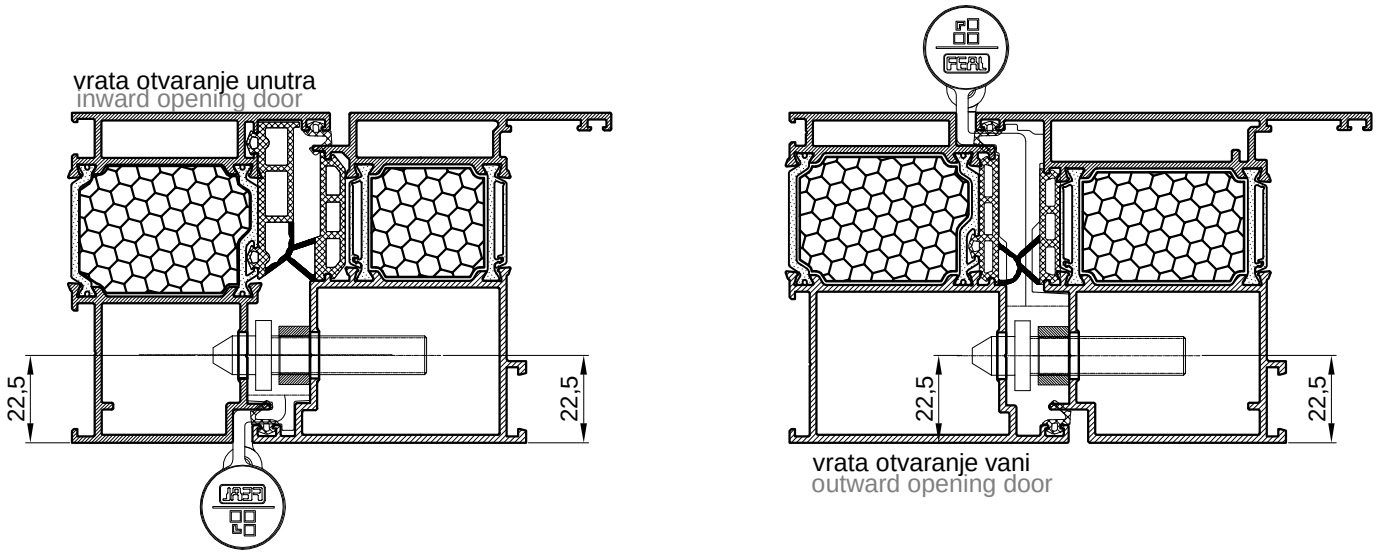
- Cilindrična šarka FEAL-GIESE
  za vrata Termo 85 VS i VP otvaranje vani
- Barrel door hinge FEAL-GIESE
  for Termo 85 VS i VP outward opening



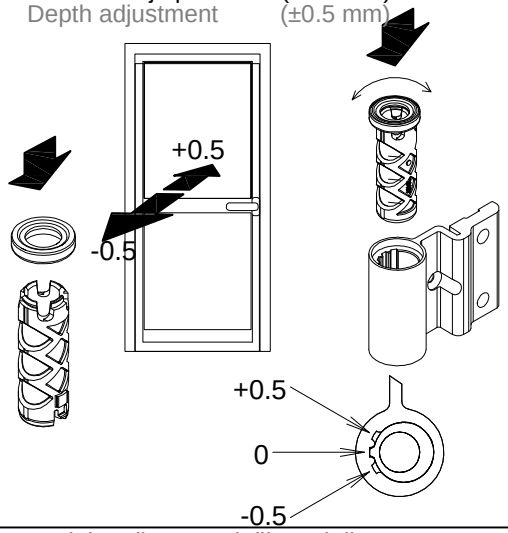




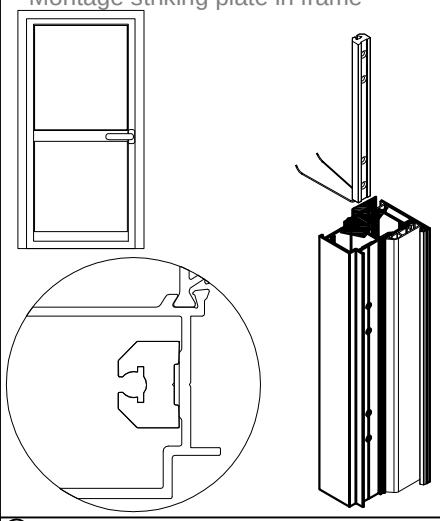

22.5
Ø12
Ø3.5
20
13
Ø12
22.5
protuprovalni
umetak 141.002
security pin
141.002
433.117
431.340 vijak za
podešavanje položaja
protuprovalnog umetka
431.340 screw for adjusting
position security pin


vrata otvaranje unutra
inward opening door
22,5
22,5
22,5
22,5
vrata otvaranje vani
outward opening door

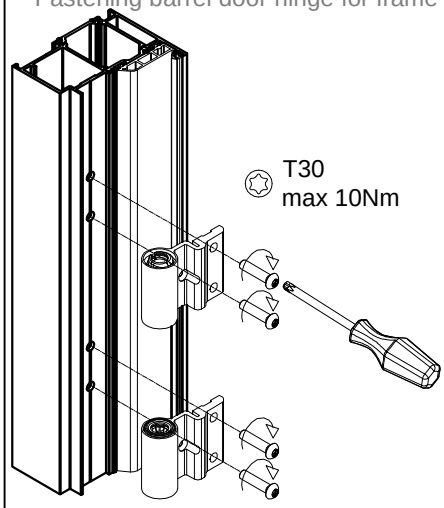
① Podešavanje po dubini (±0.5 mm)
Depth adjustment (±0.5 mm)



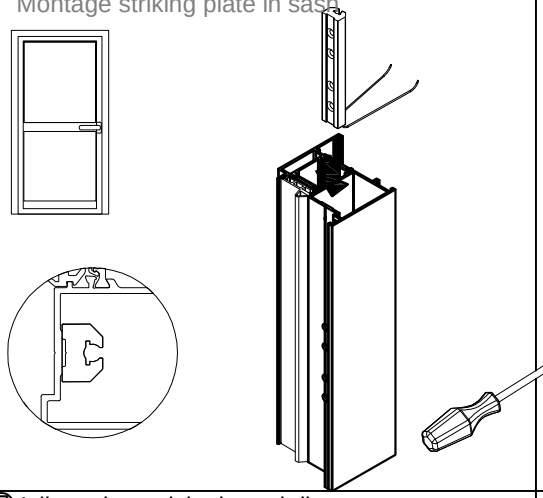
② Ugradnja prihvatne pločice u ram
Montage striking plate in frame



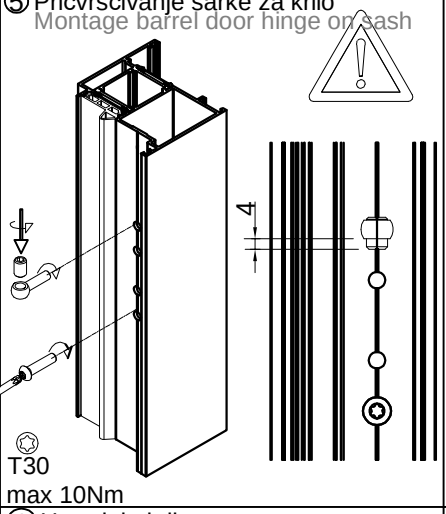
③ Pričvršćivanje šarke za ram
Fastening barrel door hinge for frame



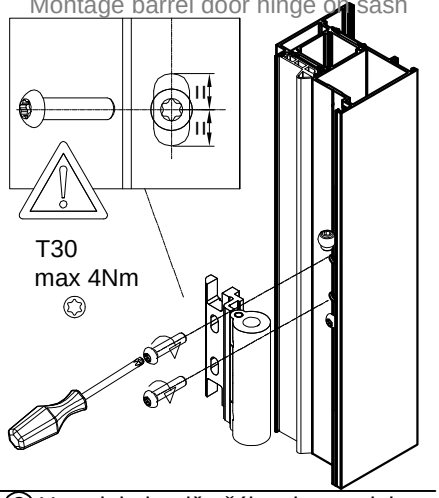
④ Ugradnja prihvatne pločice u krilo
Montage striking plate in sash



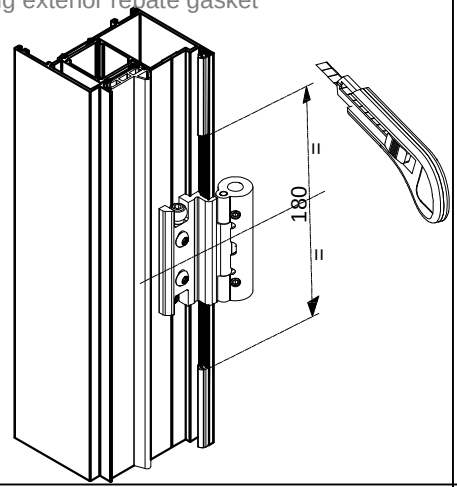
⑤ Pričvršćivanje šarke za krilo
Montage barrel door hinge on sash



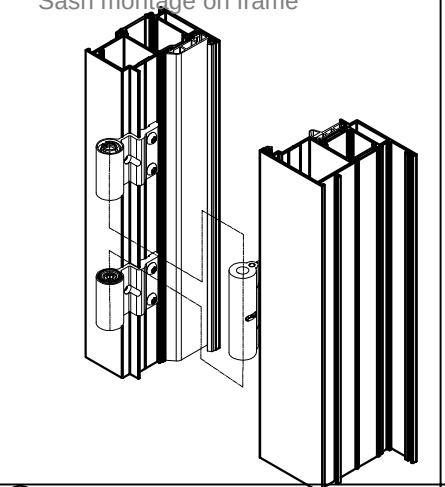
⑥ Pričvršćivanje šarke za krilo
Montage barrel door hinge on sash



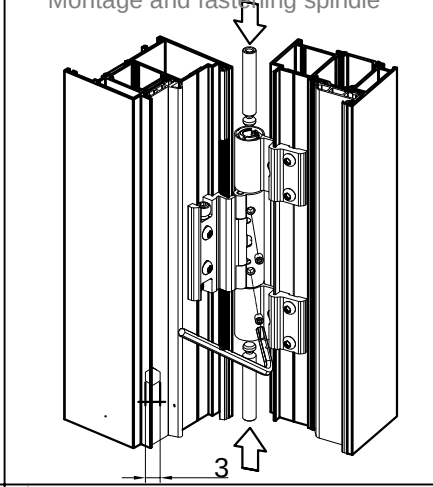
⑦ Isijecanje vanjske brtve krila
Cutting exterior rebate gasket



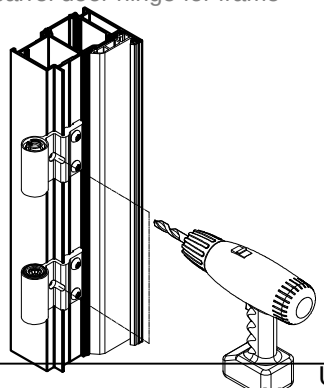
⑧ Ugradnja krila na ram
Sash montage on frame



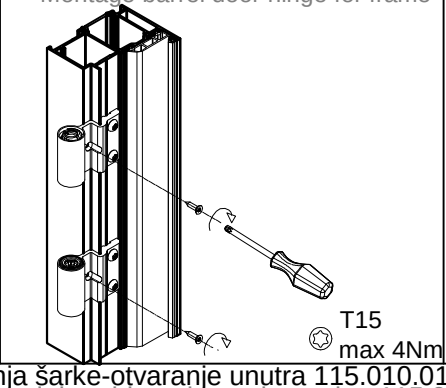
⑨ Ugradnja i pričvršćivanje osovinice
Montage and fastening spindle



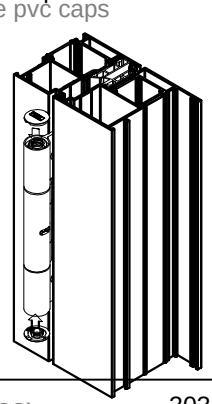
⑩ Pričvršćivanje šarke za ram
Montage barrel door hinge for frame



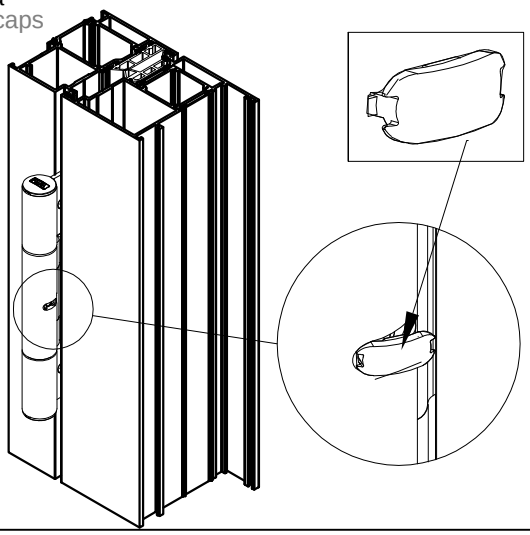
⑪ Pričvršćivanje šarke za ram
Montage barrel door hinge for frame



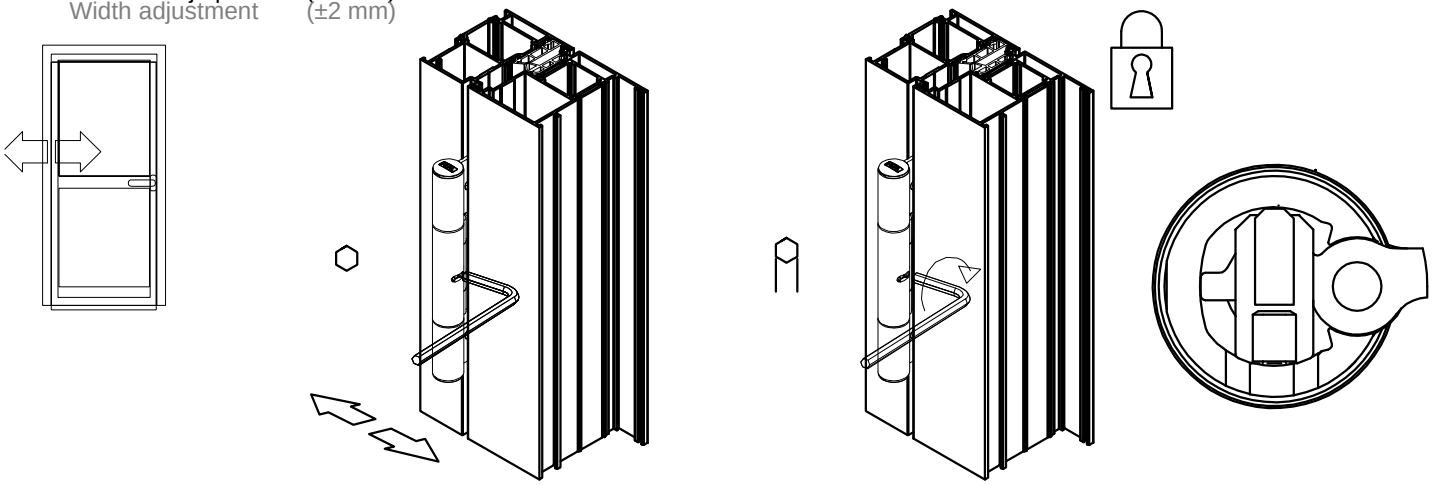
⑫ Ugradnja čepova
Montage pvc caps



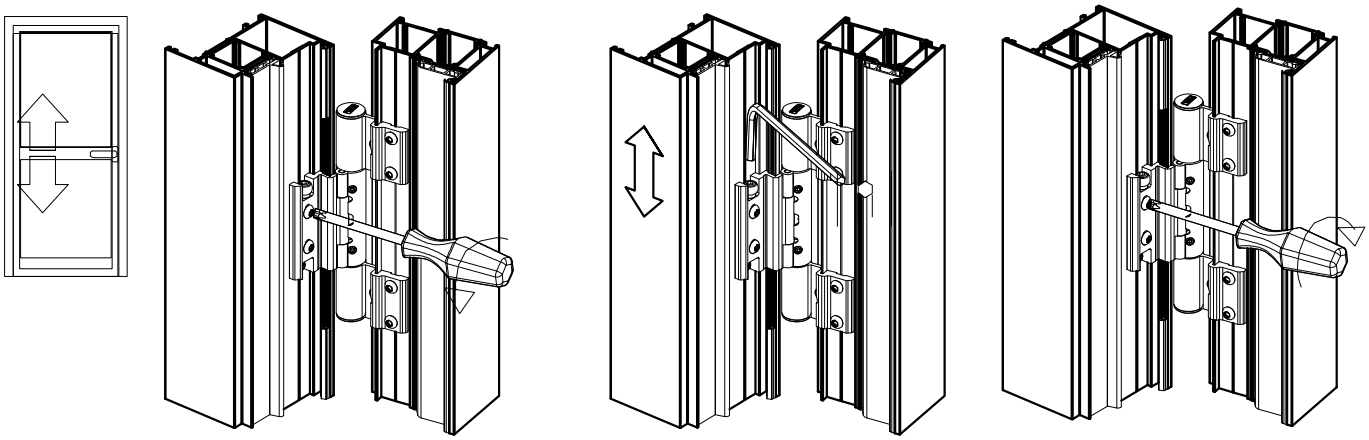
13 Ugradnja čepa
Montage pvc caps



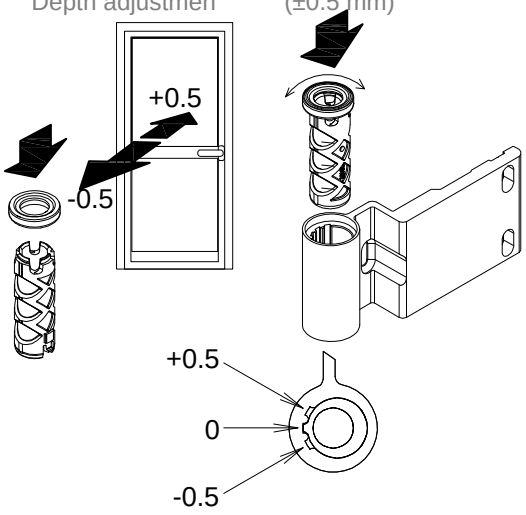
Podešavanje po širini (±2 mm)
Width adjustment (±2 mm)



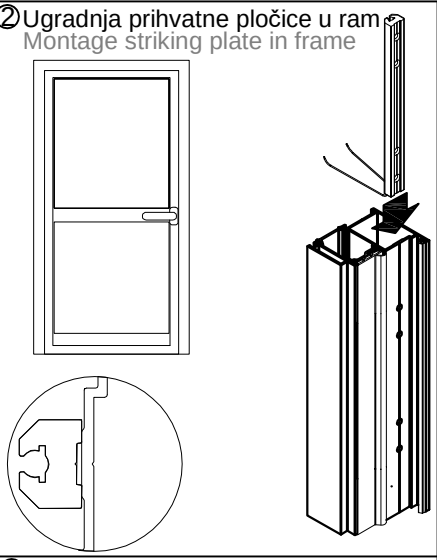
Podešavanje po visini (±2.5 mm)
Height adjustment (±2.5 mm)



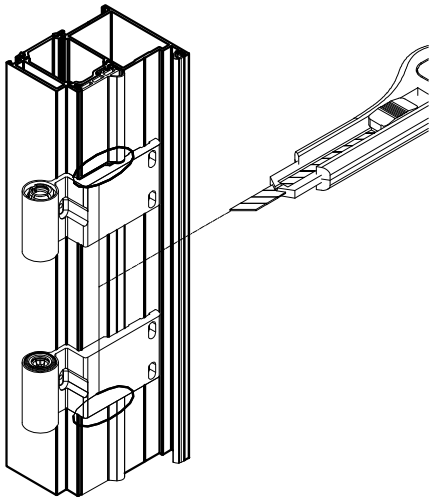
① Podešavanje po dubini (±0.5 mm)
Depth adjustmen (±0.5 mm)



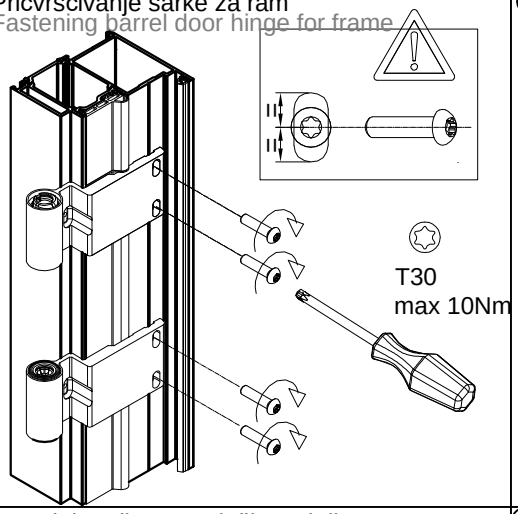
② Ugradnja prihvatne pločice u ram
Montage striking plate in frame



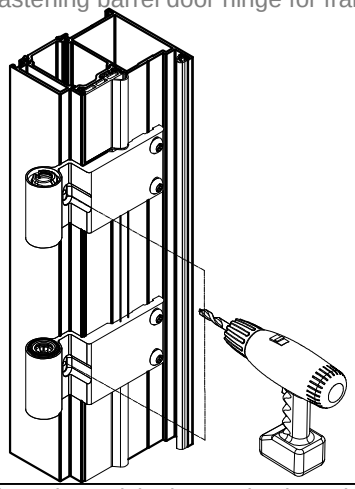
③ Isjecanje dijela centralne brtve na ramu
Cutting central gasket on frame



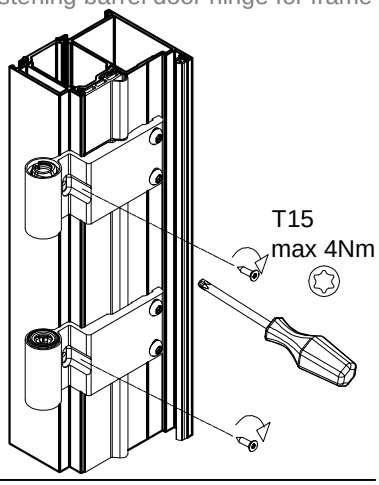
④ Pričvršćivanje šarke za ram
Fastening barrel door hinge for frame



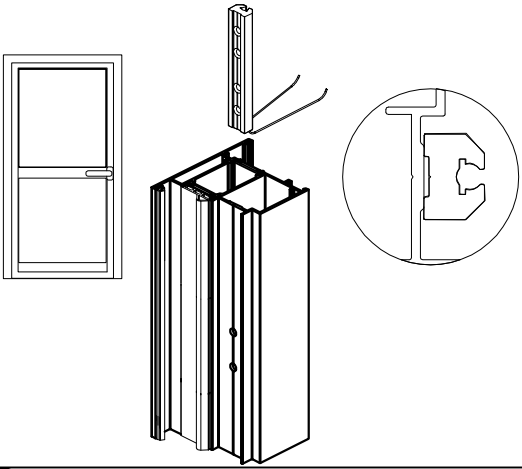
⑤ Pričvršćivanje šarke za ram
Fastening barrel door hinge for frame



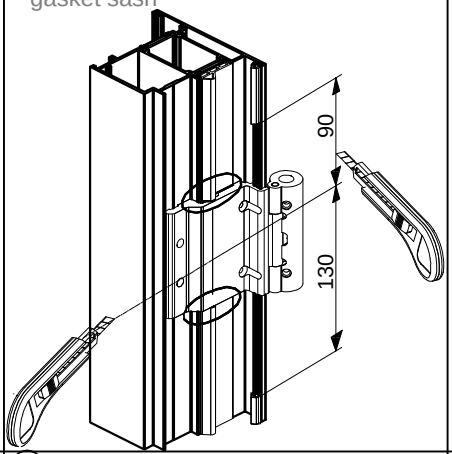
⑥ Pričvršćivanje šarke za ram
Fastening barrel door hinge for frame



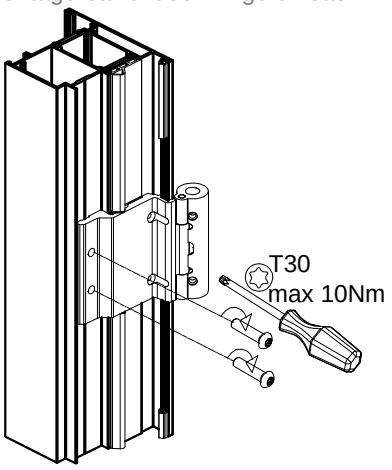
⑦ Ugradnja prihvatne pločice u krilo
Montage striking plate in sash



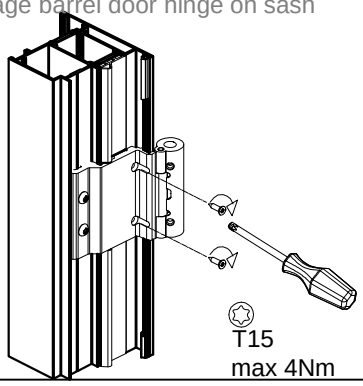
⑧ Isijecanje vanjske i centralne brtve krila
Cutting rebate gasket and central gasket sash



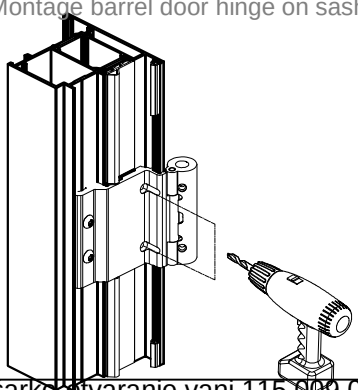
⑨ Pričvršćivanje šarke za krilo
Montage barrel door hinge on sash



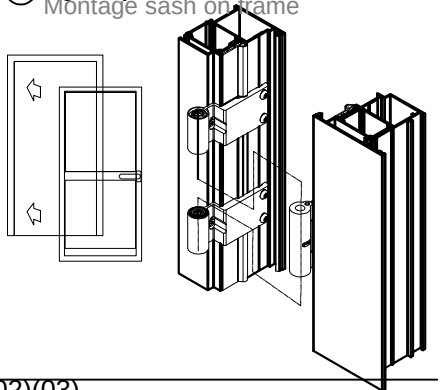
⑩ Pričvršćivanje šarke za krilo
Montage barrel door hinge on sash



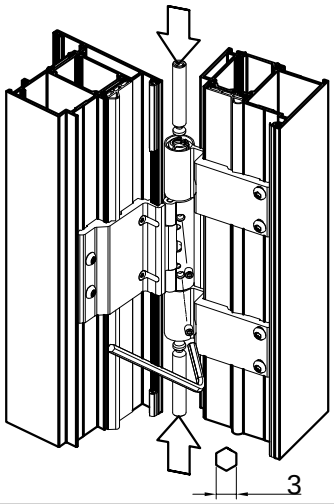
⑪ Pričvršćivanje šarke za krilo
Montage barrel door hinge on sash



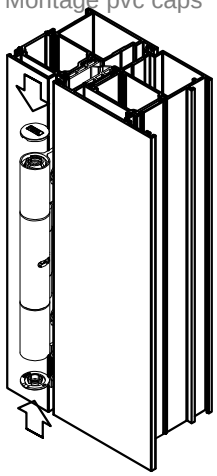
⑫ Ugradnja krila na ram
Montage sash on frame



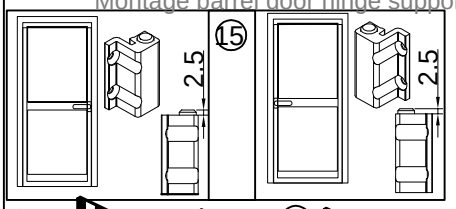
13 Ugradnja i pričvršćivanje osovinice
Montage and fastening spindle

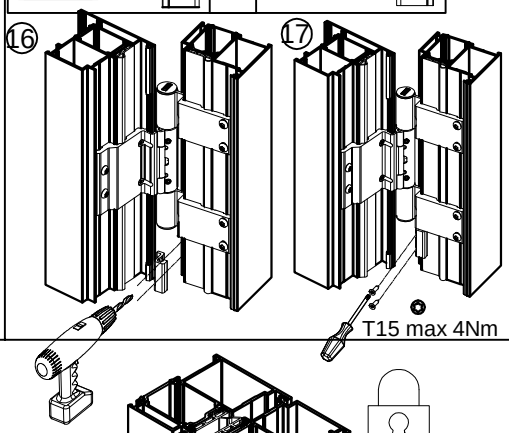


14 Ugradnja čepova
Montage pvc caps

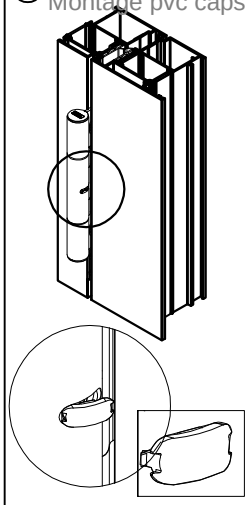


Ugradnja oslonaca za šarku
Montage barrel door hinge support

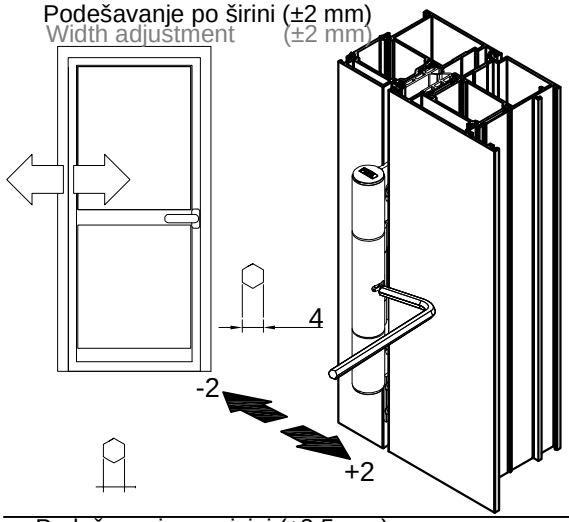


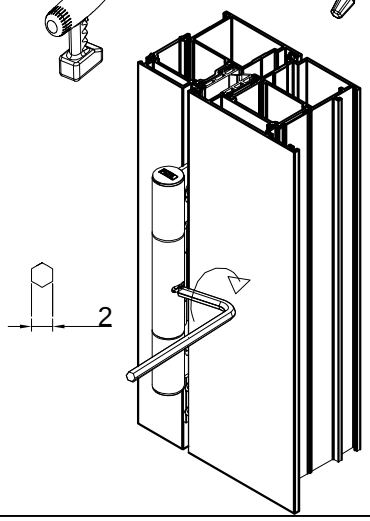


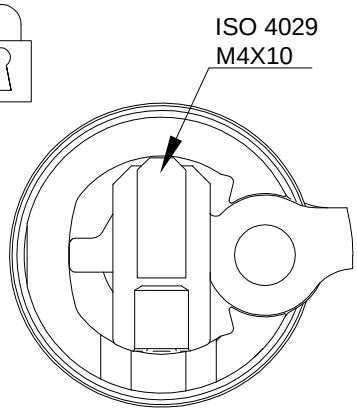
18 Ugradnja čepa
Montage pvc caps



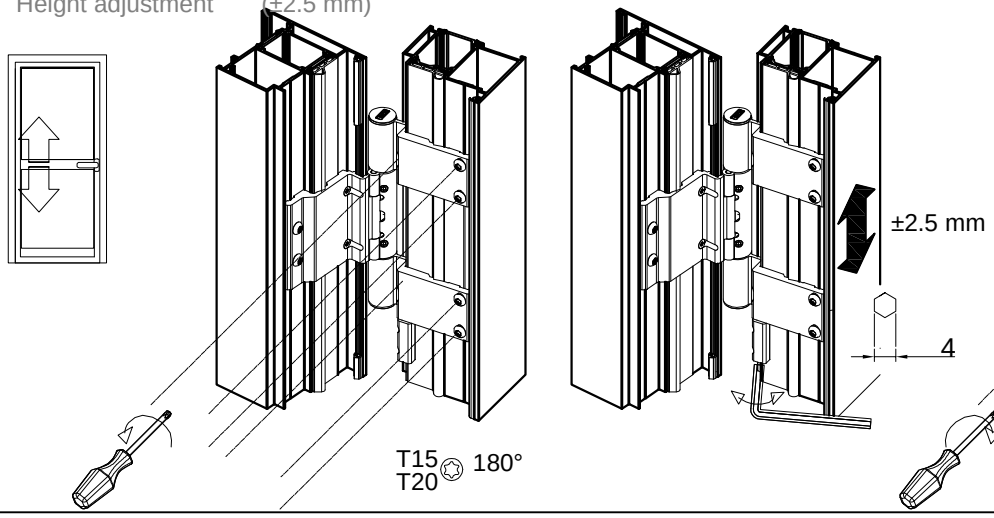
Podešavanje po širini (±2 mm)
Width adjustment (±2 mm)

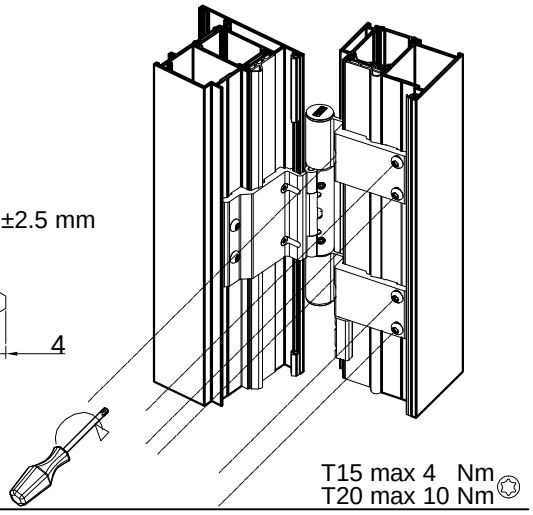


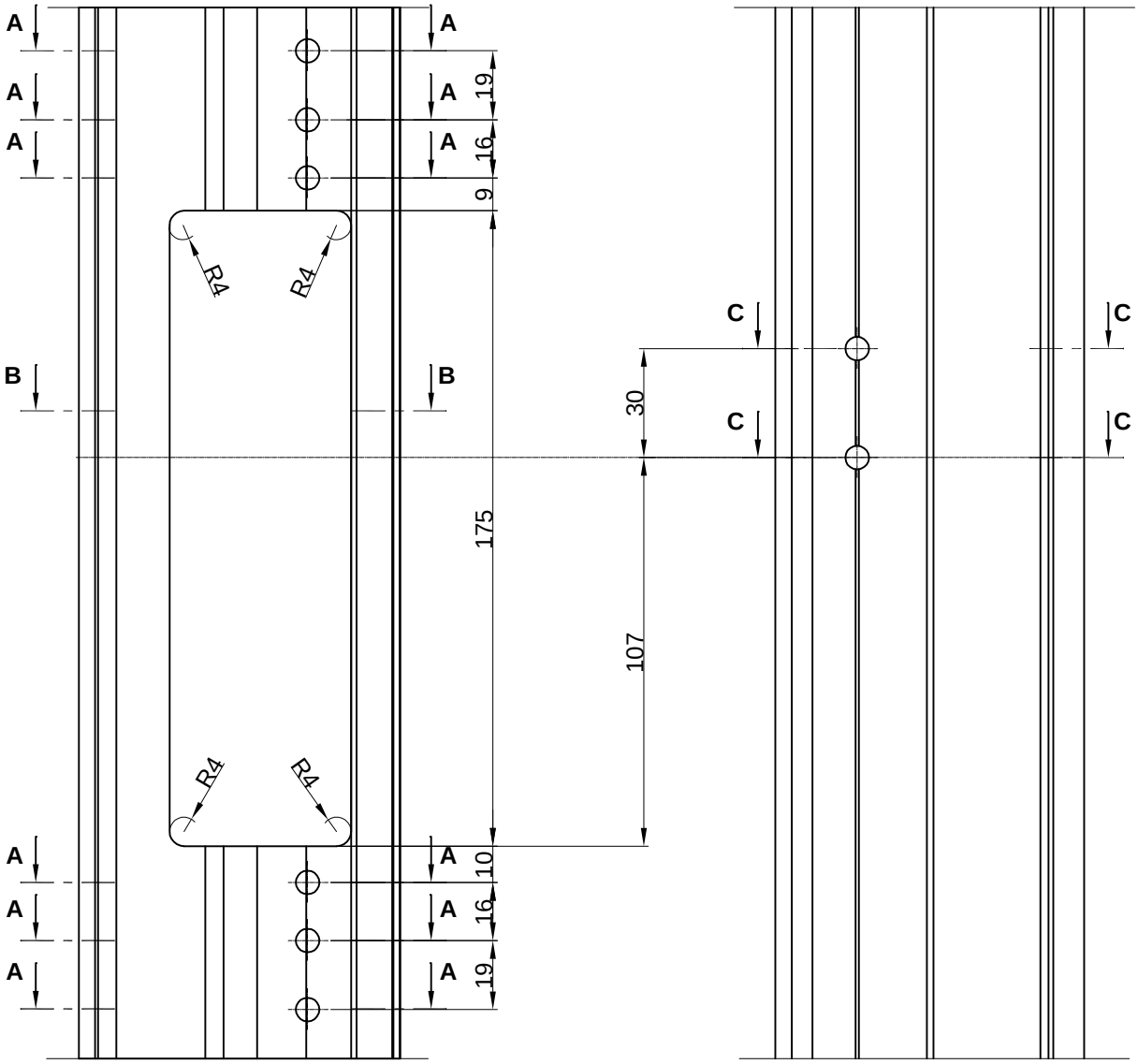




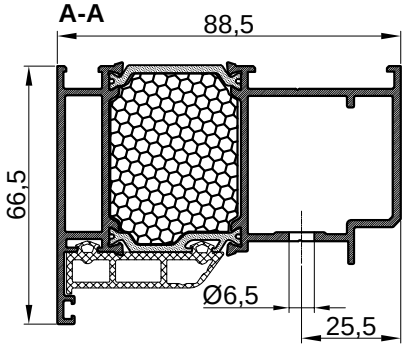
Podešavanje po visini (±2.5 mm)
Height adjustment (±2.5 mm)



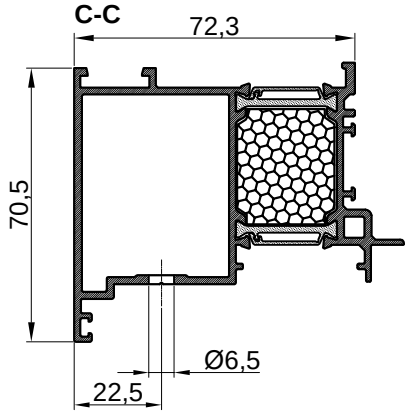




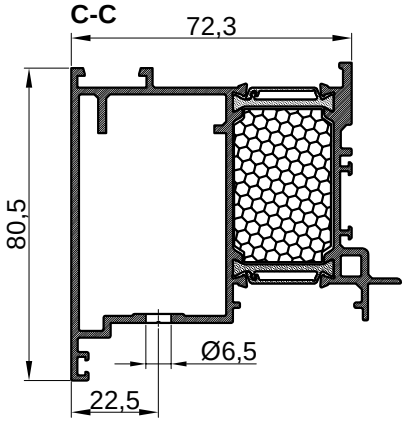
FT-0556F
A-A

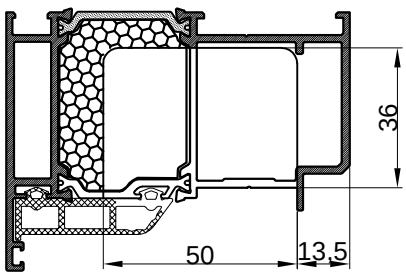


FT-0591F
C-C

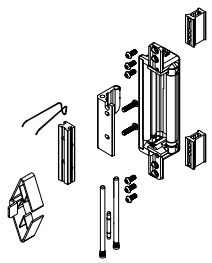


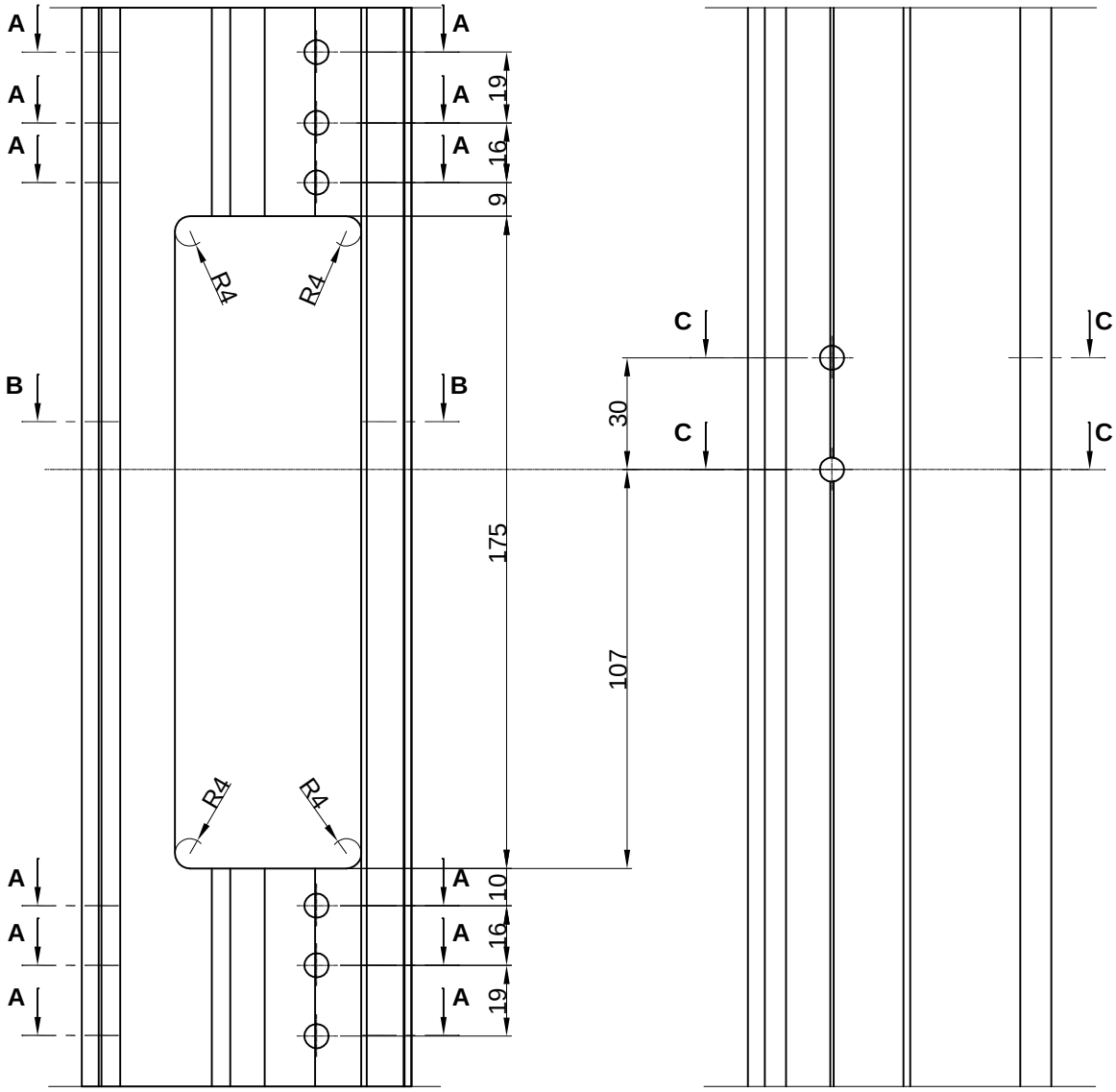
FT-0592F
C-C

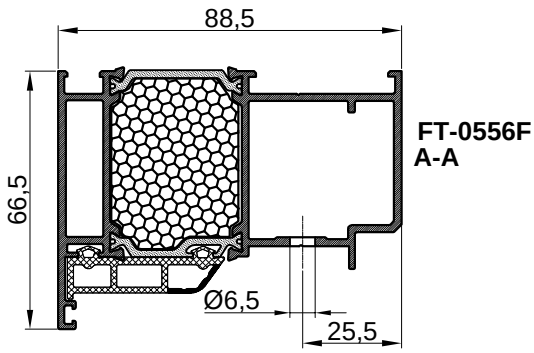




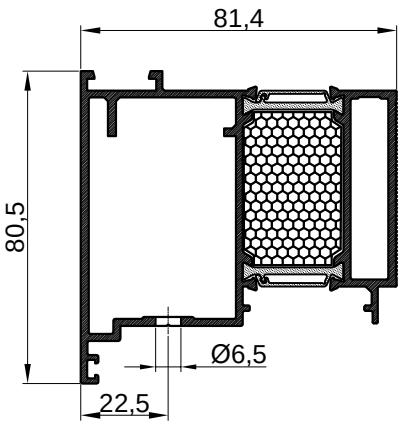
FT-0556F
B-B

115.016.01 **02** **03**		- Skrivena šarka FEAL-GIESE za vrata otvaranje unutra - Boje: 01- bijela; 02 - siva; 03 - crna - Concealed door hinge FEAL-GIESSE (door - inward opening) - Color: 01- white; 02 - gray; 03 - black

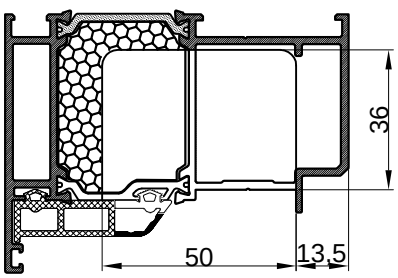




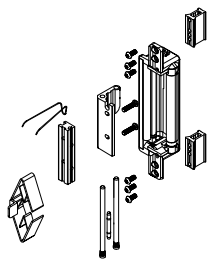
FT-0556F
A-A

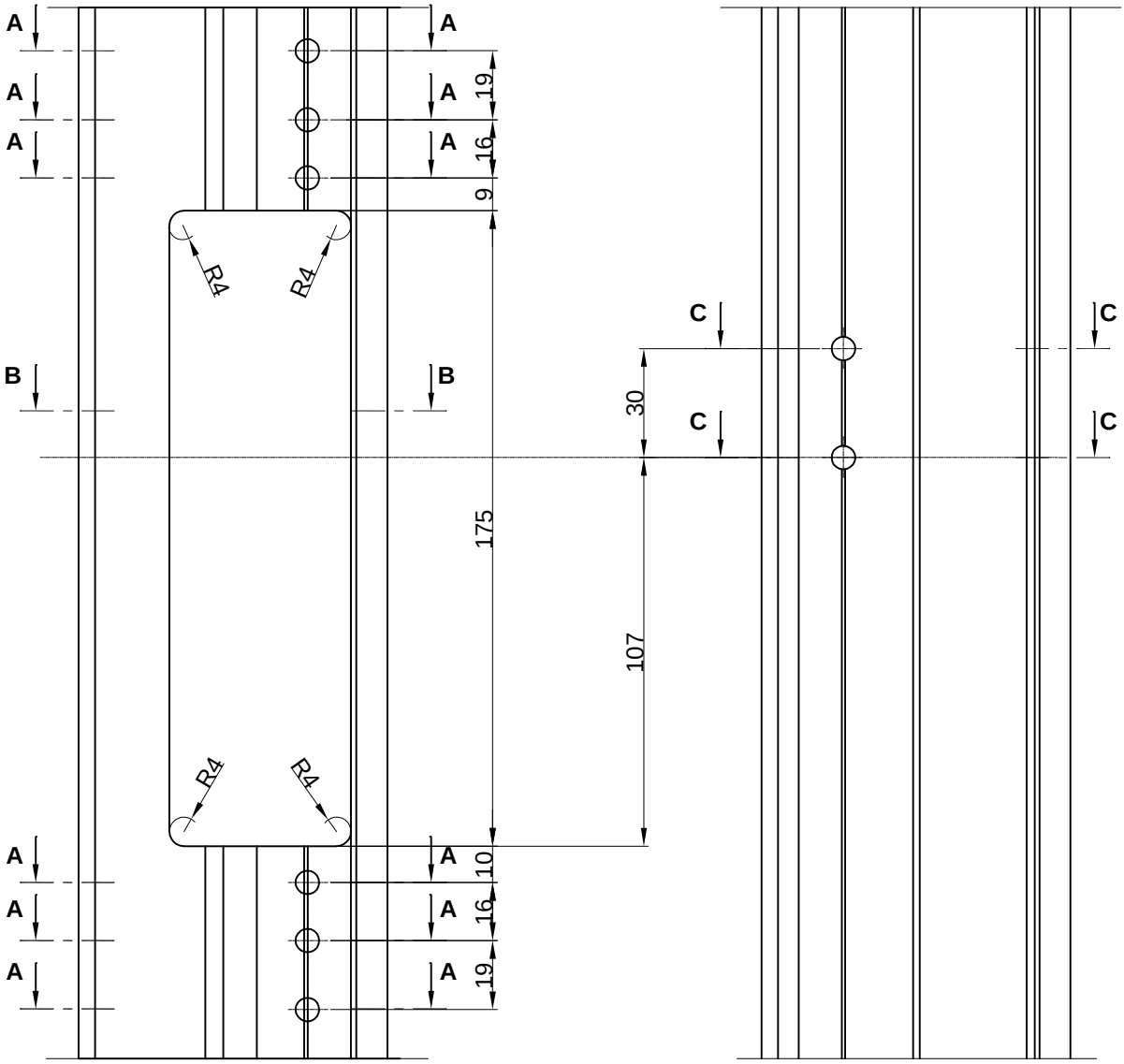


FT-0593F
C-C

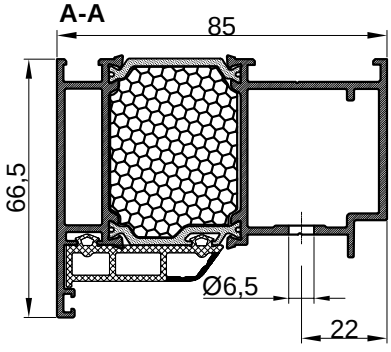


FT-0556F
B-B

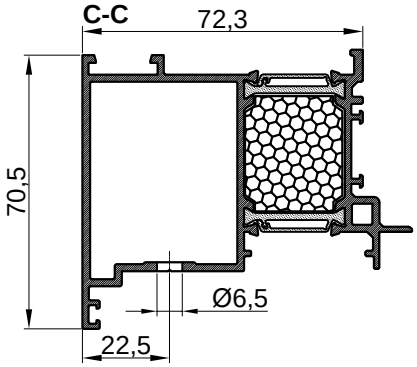
115.016.01 **02** **03**		- Skrivena šarka FEAL-GIESSE za vrata otvaranje unutra - Boje: 01- bijela; 02 - siva; 03 - crna - Concealed door hinge FEAL-GIESSE (door - inward opening) - Color: 01- white; 02 - gray; 03 - black



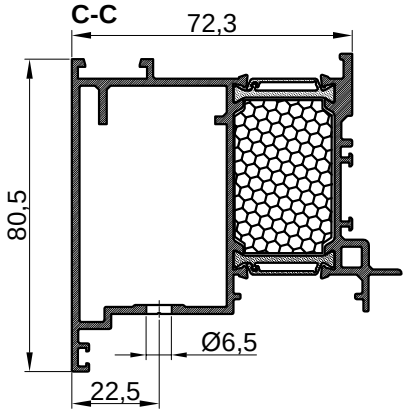
FT-0551 F
A-A

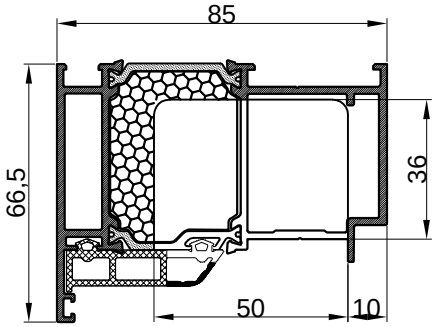


FT-0591 F
C-C

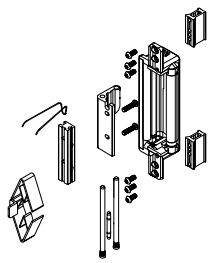


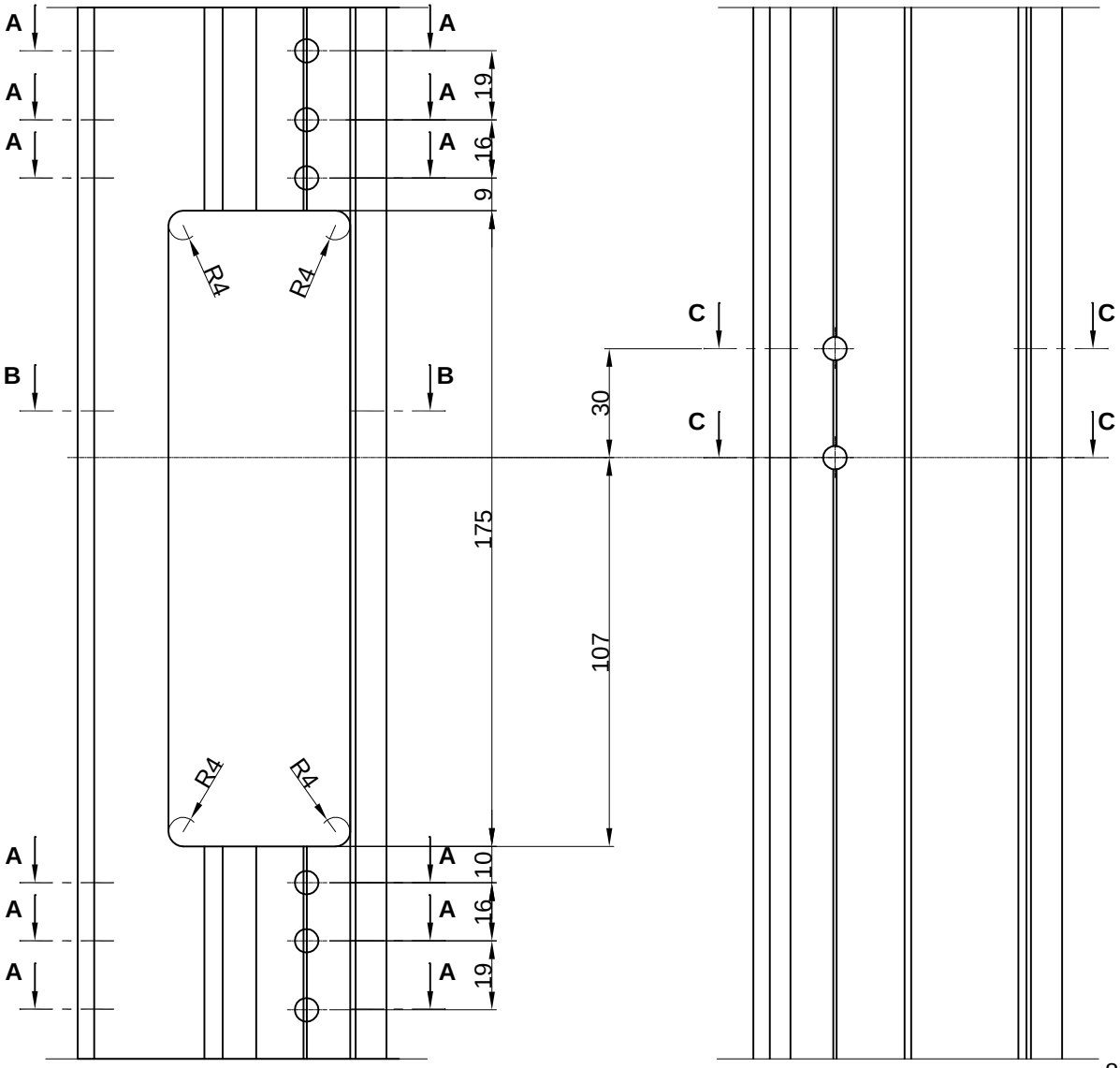
FT-0592F
C-C



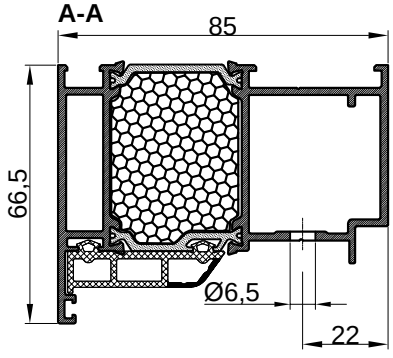


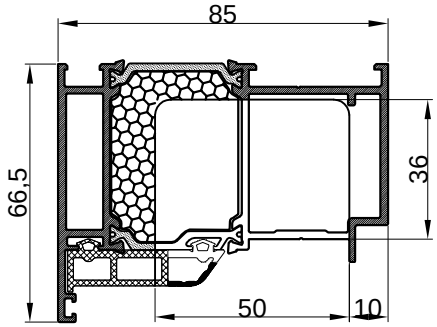
FT-0551F
B-B

115.016.01 **02** **03**		- Skrivena šarka FEAL-GIESSE za vrata otvaranje unutra - Boje: 01- bijela; 02 - siva; 03 - crna - Concealed door hinge FEAL-GIESSE (door - inward opening) - Color: 01- white; 02 - gray; 03 - black



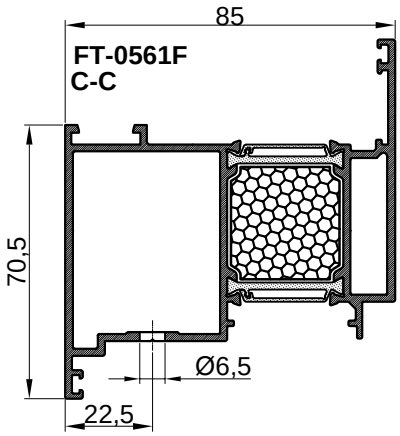
FT-0551 F
A-A



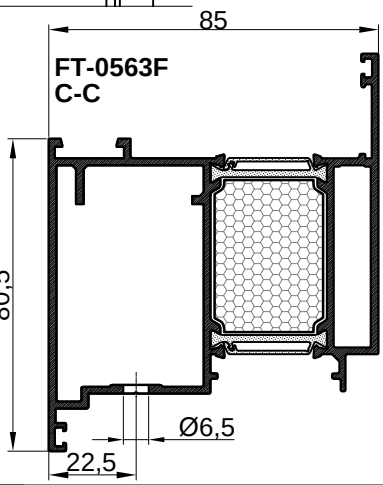


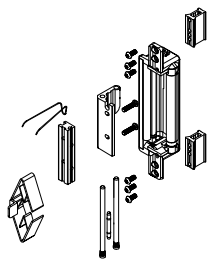
FT-0551F
B-B

FT-0561F
C-C

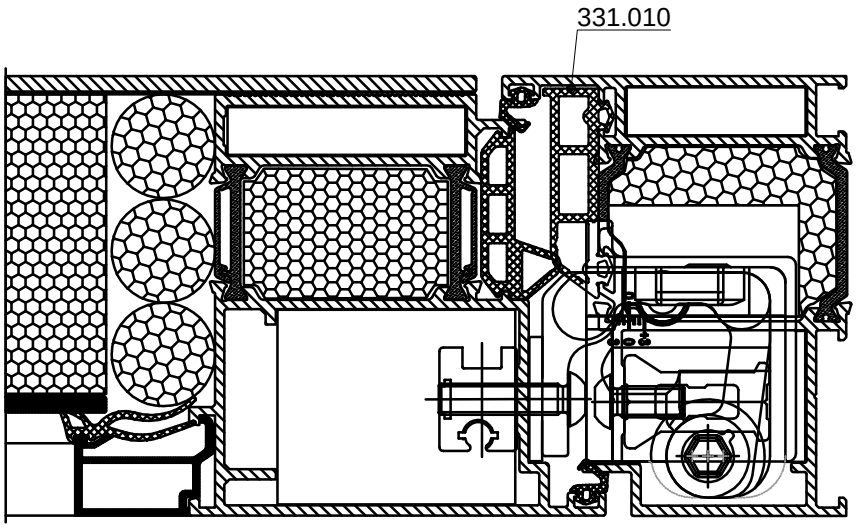


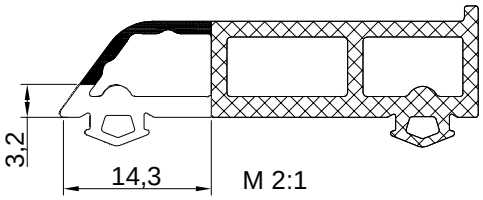
FT-0563F
C-C

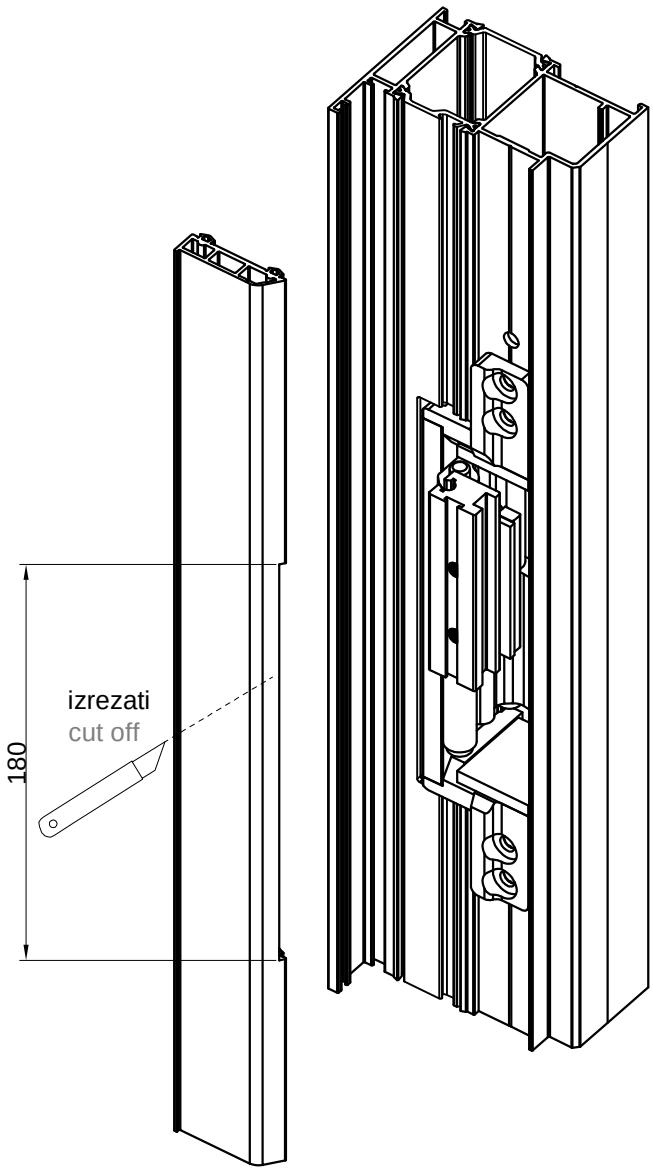


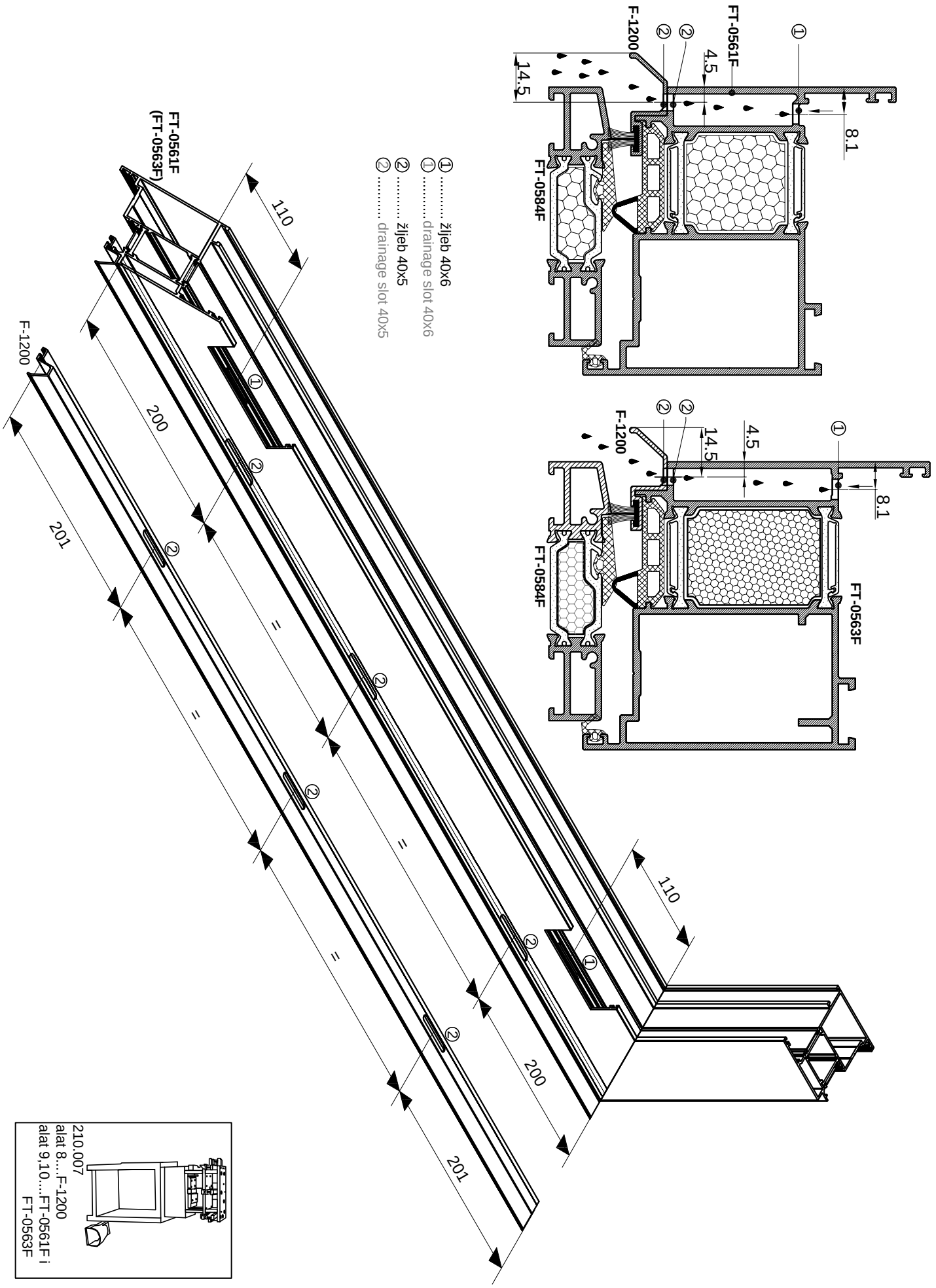
115.016.01 **02** **03**		- Skrivena šarka FEAL-GIESSE za vrata otvaranje unutra - Boje: 01- bijela; 02 - siva; 03 - crna - Concealed door hinge FEAL-GIESSE (door - inward opening) - Color: 01- white; 02 - gray; 03 - black

OBRADA BRTVE 331.010
-obrada brtve na poziciji ugradnje Feal-Giesse skrivene šarke 115.016
PROCESSING OF GASKET 331.010
-processing of gasket at Feal-Giesse concealed hinge installation position 115.016

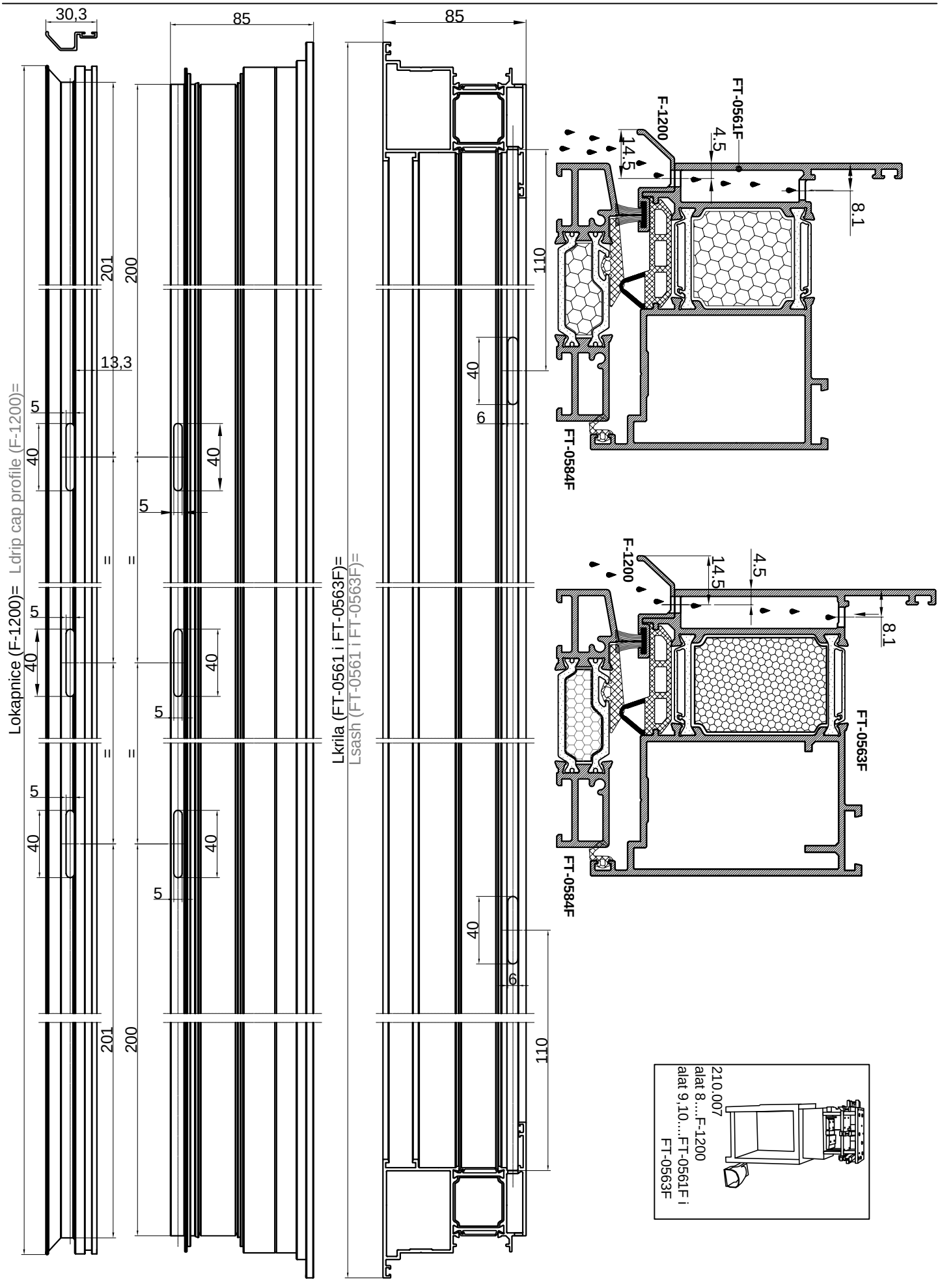


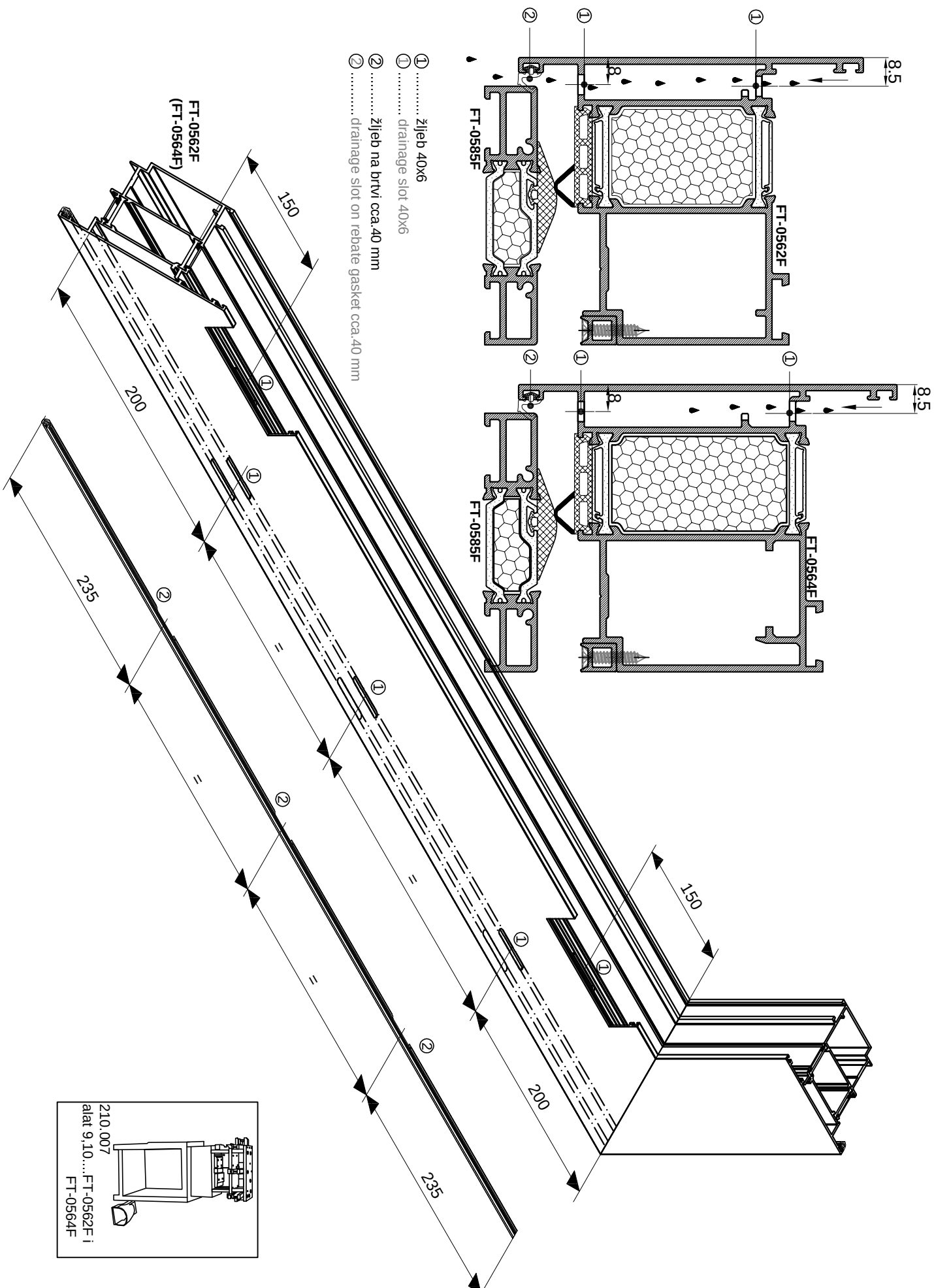




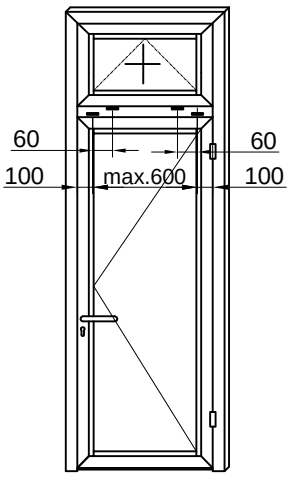

F-1200
FT-0561F
4.5
14.5
8.1
FT-0584F
F-1200
14.5
4.5
8.1
FT-0584F
FT-0563F
FT-0561F
(FT-0563F)
① ..... žljeb 40x6
① ..... drainage slot 40x6
② ..... žljeb 40x5
② ..... drainage slot 40x5
F-1200
110
200
201
=
=
=
110
200
201

210.007
alat 8...F-1200
alat 9,10....FT-0561F i
FT-0563F

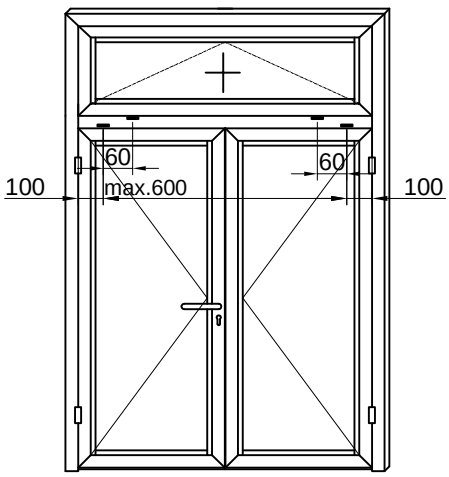

30,3
85
85
Lokapnice (F-1200)= Ldrip cap profile (F-1200)=
Lkrila (FT-0561 i FT-0563F)=
Lsash (FT-0561 i FT-0563F)=
201
200
13,3
5
40
110
6
F-1200
FT-0561F
14,5
4,5
8,1
FT-0584F
FT-0563F
210.007
alat 8....F-1200
alat 9,10....FT-0561F i
FT-0563F


① ..... žljeb 40x6
① ..... drainage slot 40x6
② ..... žljeb na brtvi cca.40 mm
② ..... drainage slot on rebate gasket cca.40 mm
FT-0562F
(FT-0564F)
FT-0585F
FT-0562F
FT-0585F
FT-0564F
8,5
150
200
235
=
210.007
alat 9,10...FT-0562F i
FT-0564F

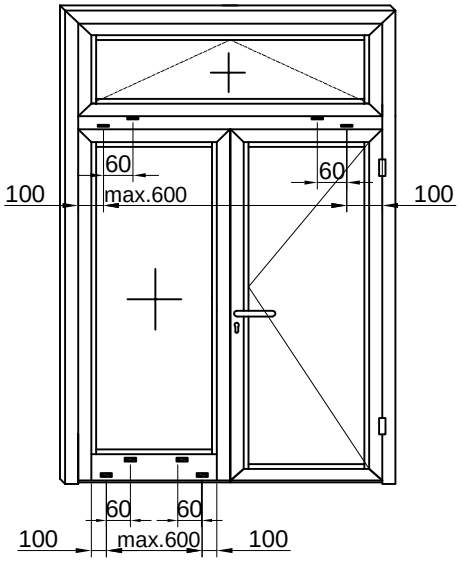
fiksno ili otvarajuće nadsvjetlo
fixed or tilt top light



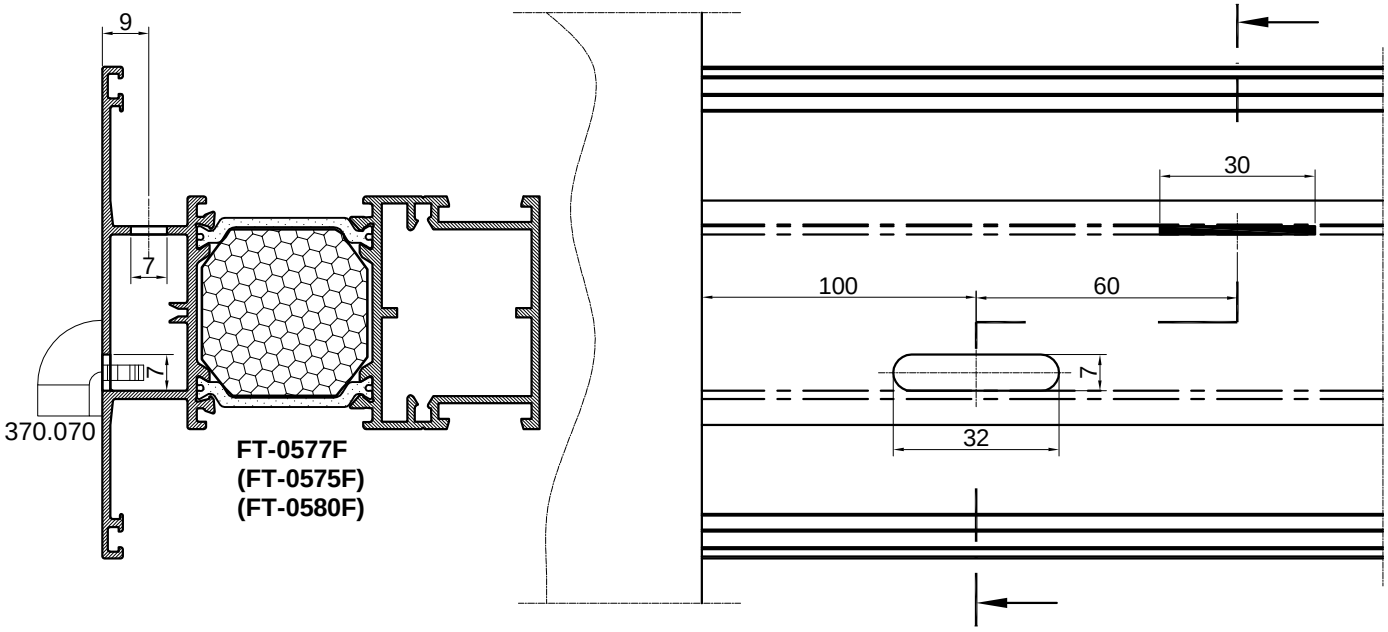
fiksno ili otvarajuće nadsvjetlo
fixed or tilt top light

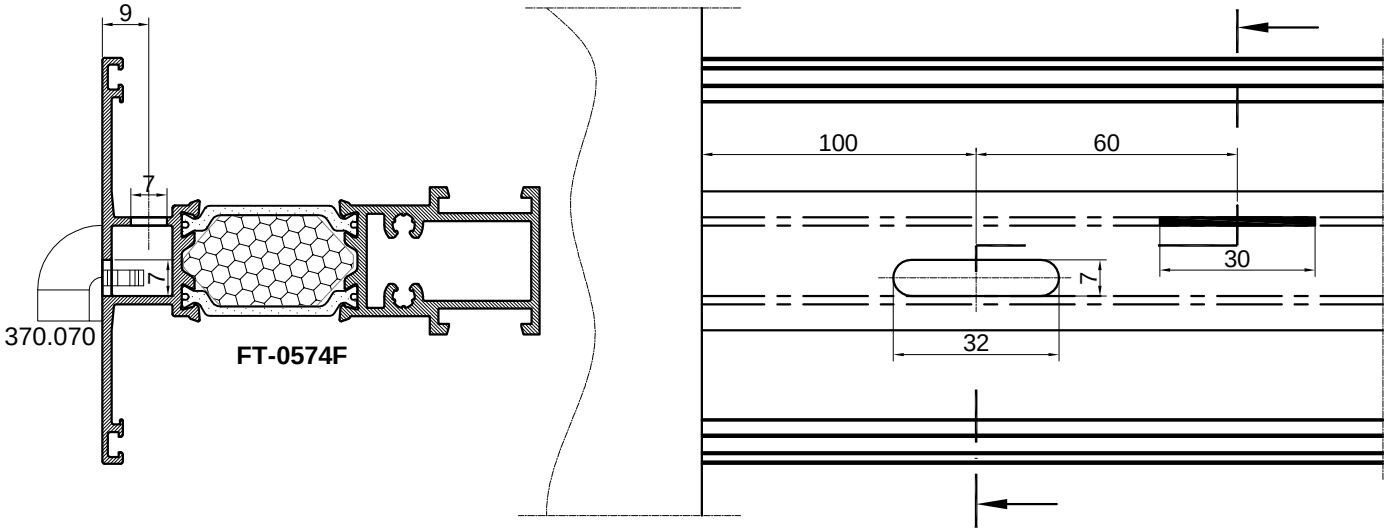


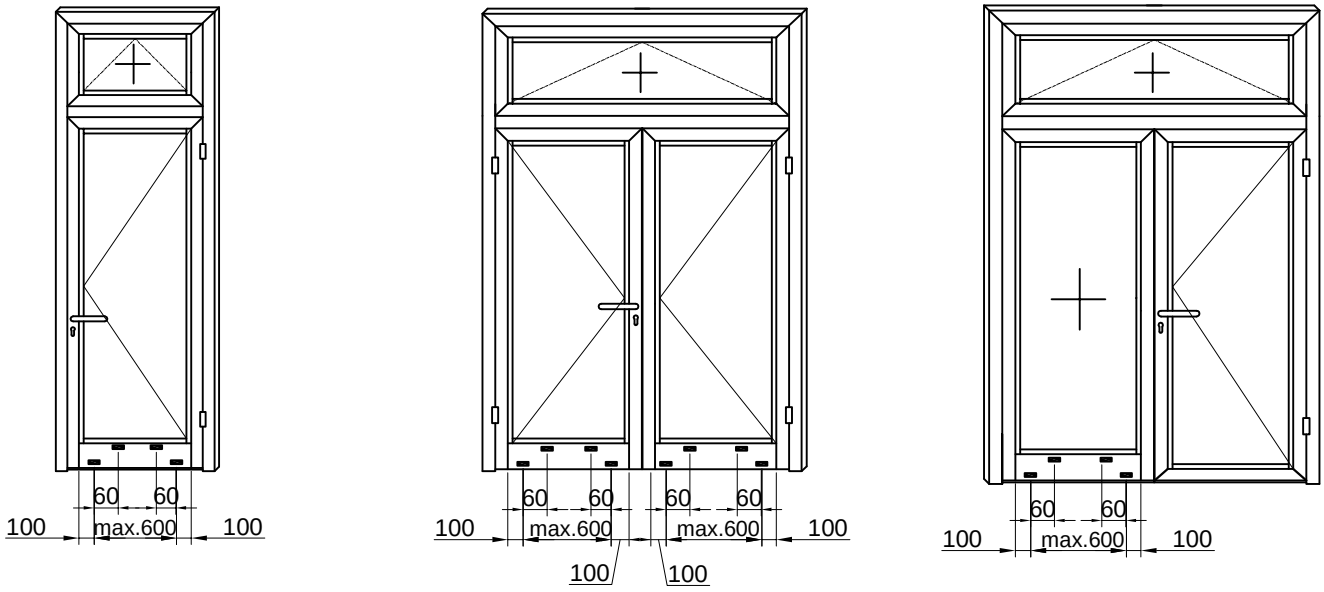
fiksno ili otvarajuće nadsvjetlo
fixed or tilt top light



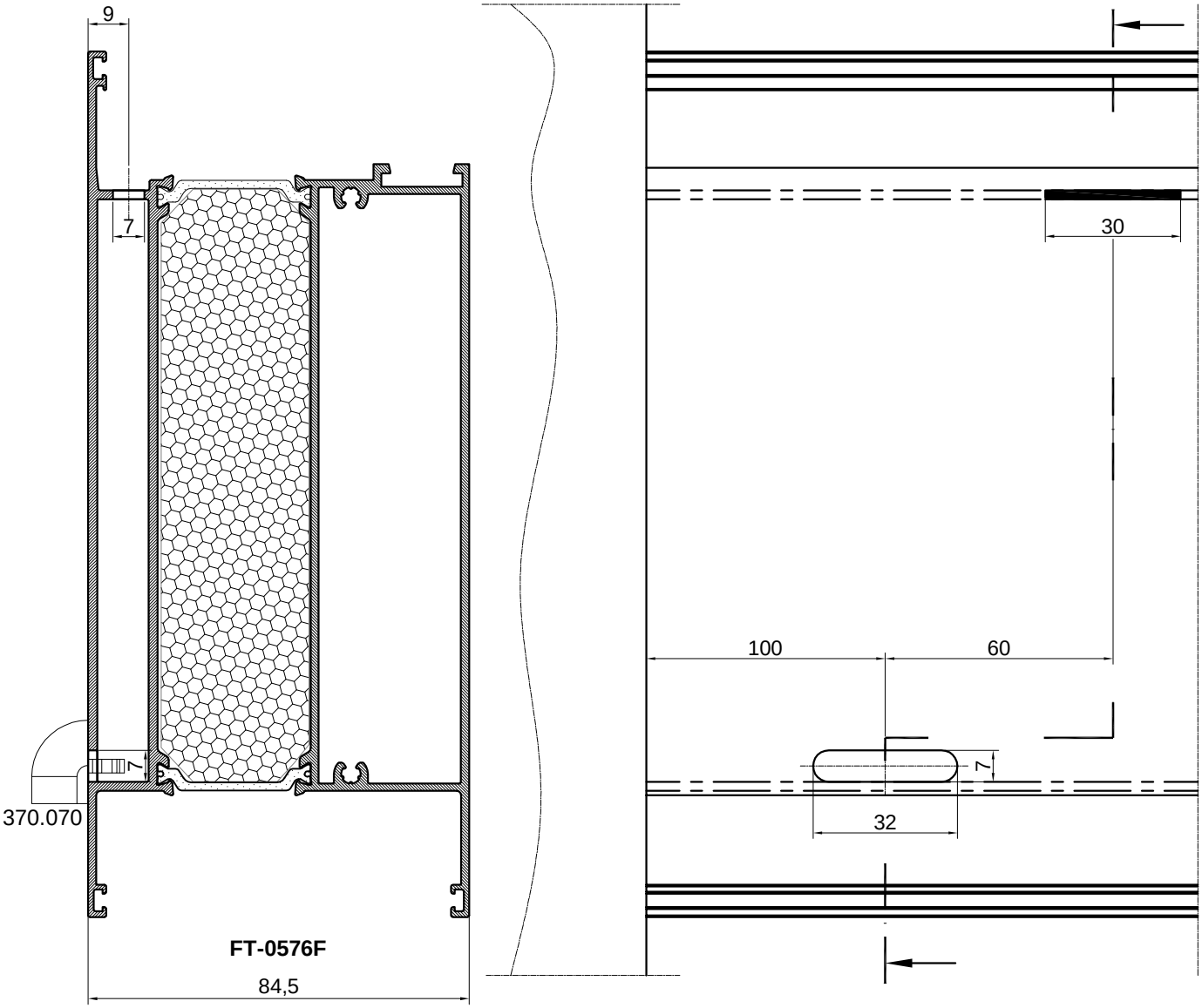
OBRADA NA PROFILIMA PREČKI ZA ODVOD KAPLJEVINA I UGRADNJA PVC ČEPA 370.070
PROCESSING OF TRANSOM PROFILE FOR WATER DRAINAGE AND MONTAGE PVC CAPS 373.003

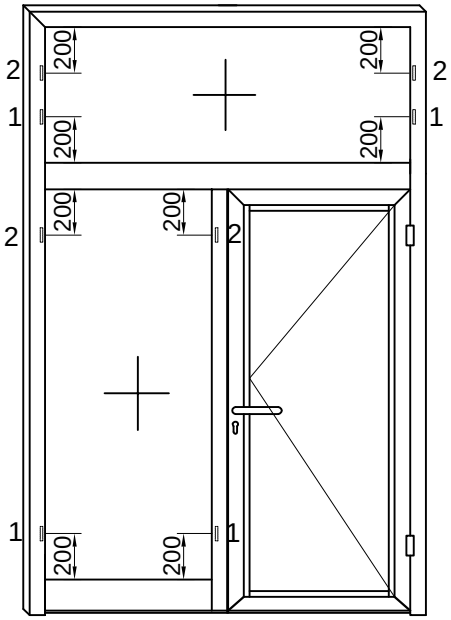






OBRADA NA PROFILIMA PREČKI ZA ODVOD KAPLJEVINA I UGRADNJA PVC ČEPA 370.070
PROCESSING OF TRANSOM PROFILE FOR WATER DRAINAGE AND MONTAGE PVC CAPS 373.003

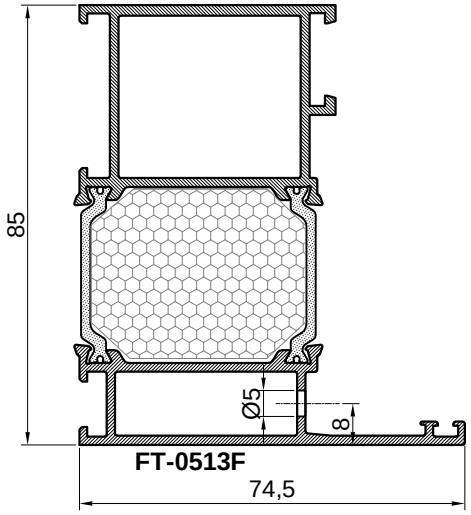


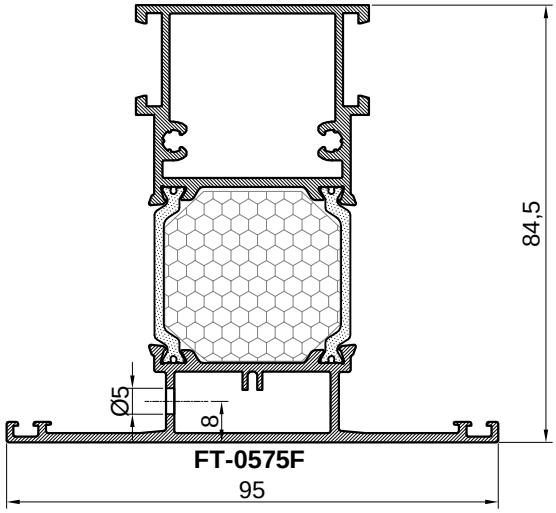


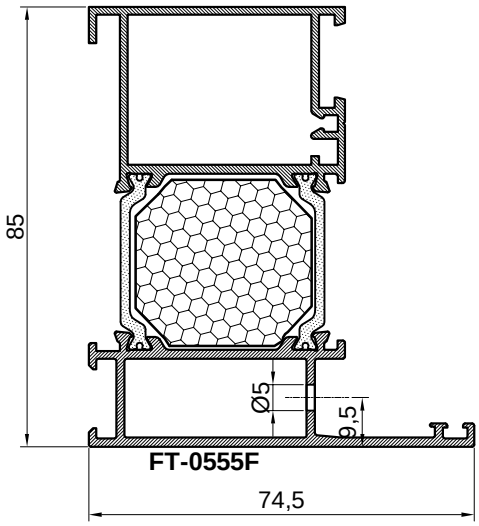
Obrada profila za ventiliranje komora
Processing profile for vent chambers

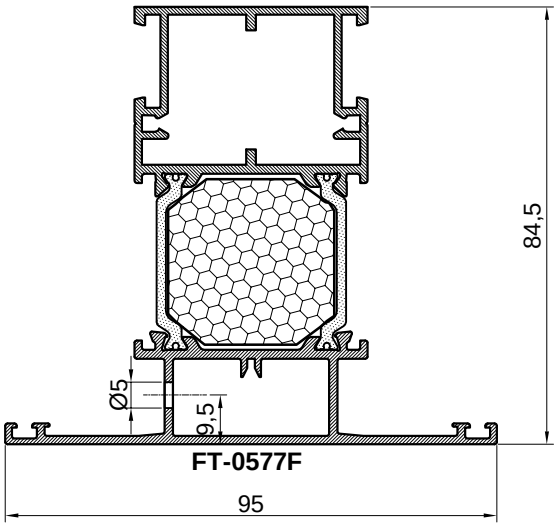
1 Obrada profila rama i prečke zbog ventiliranja komora (rupa Ø5 mm)
Processing profile frame and mullion for vent chambers (hole Ø5 mm)

2 Obrada profila rama i prečke zbog ventiliranja komora (žljeb 20x5)
Processing profile frame and mullion for vent chambers (groove 20x5)





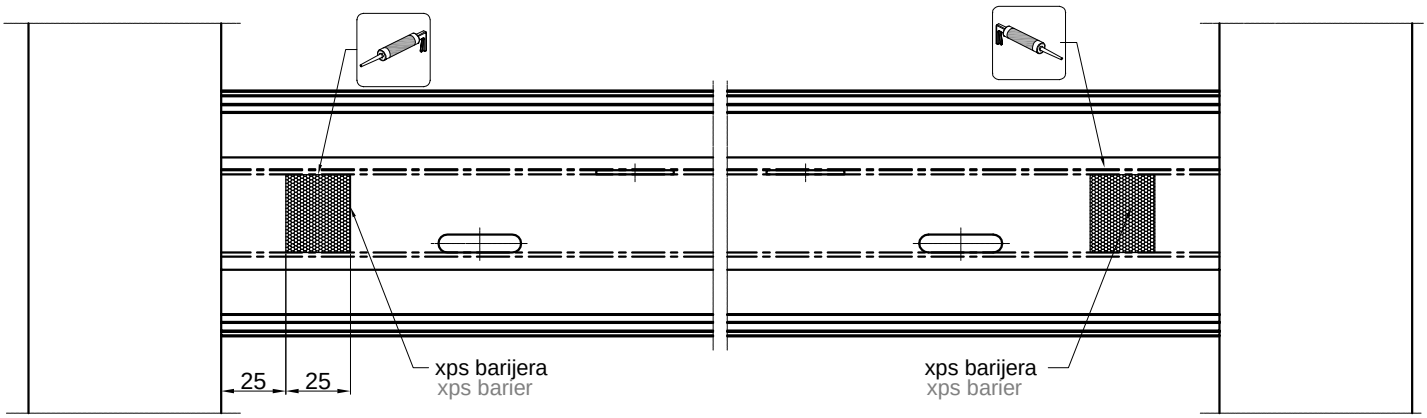


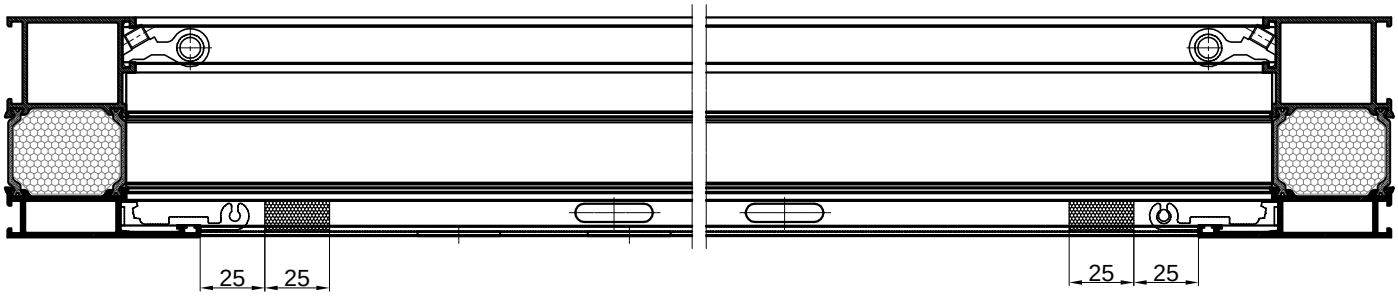


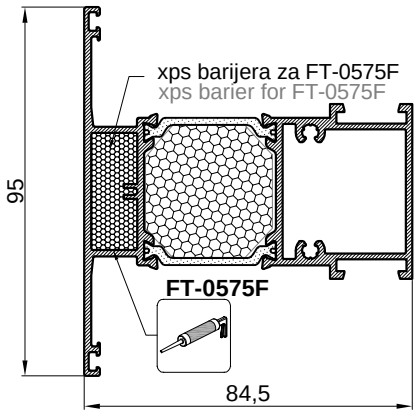
MONTAŽA XPS BARIJERA U PREČKE
INSTALLATION XPS BARRIER IN MULLIONS

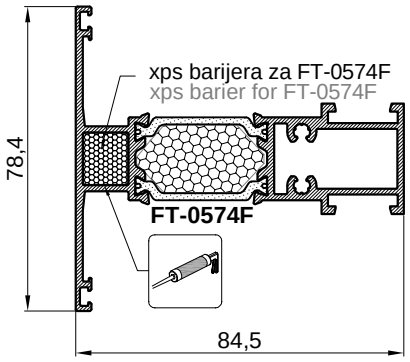
1. Po unutarnjem obodu vanjske komore bez prekida primjeniti neutralno silikonsko lijepilo (npr. Teroson MS 939)
2. U komoru prečke umetnuti odgovarajuću xps barijeru
3. Spojiti profile s spojnicama koji će i ujedno pozicionirati xps barijeru na željeno mjesto

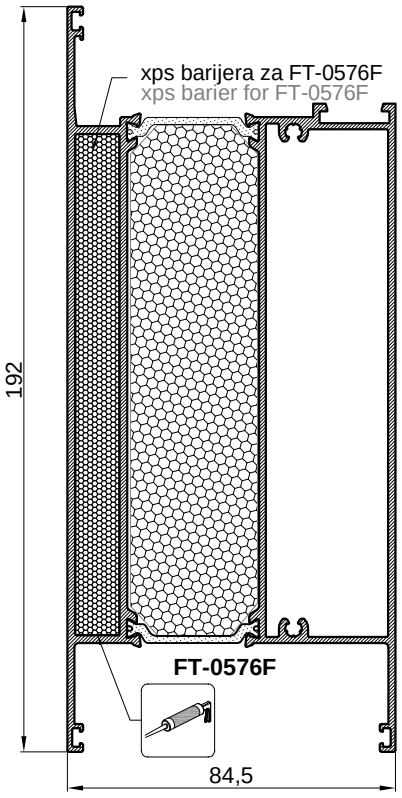
1. Apply neutral silicone adhesive to the inner circumference of the outer chamber without interruption (eg. Teroson MS 939)
2. In mullion chamber insert xps barier
3. Connect the profiles with T bracket which will also position xps barier at the desired position

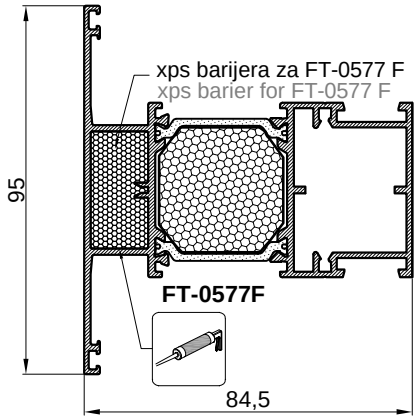


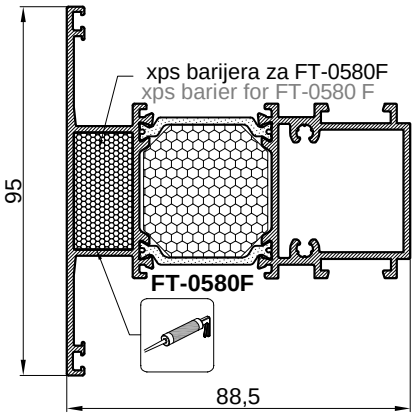


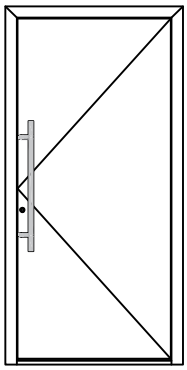




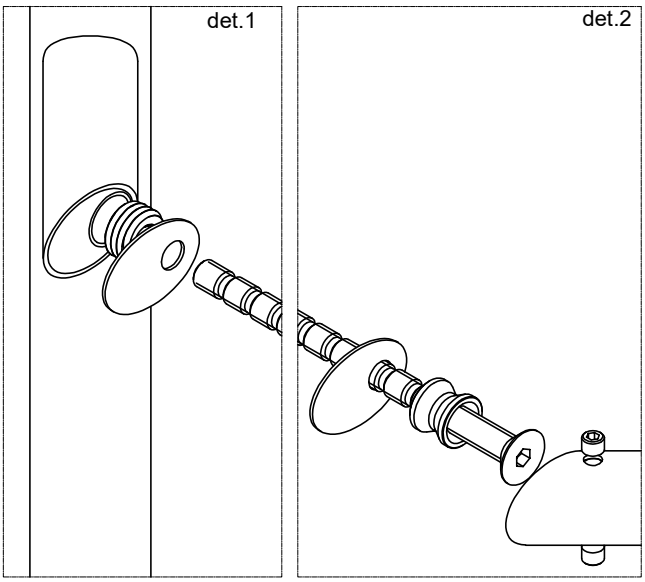


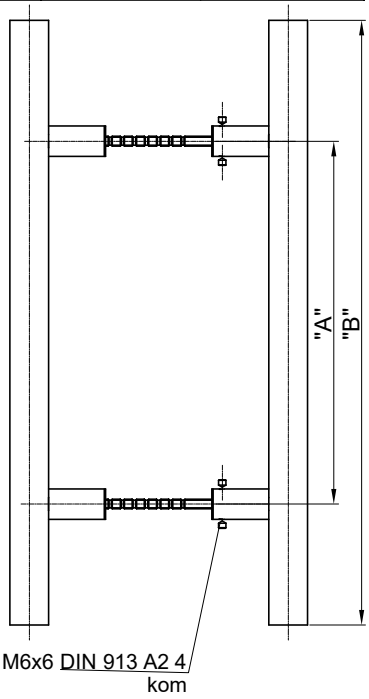


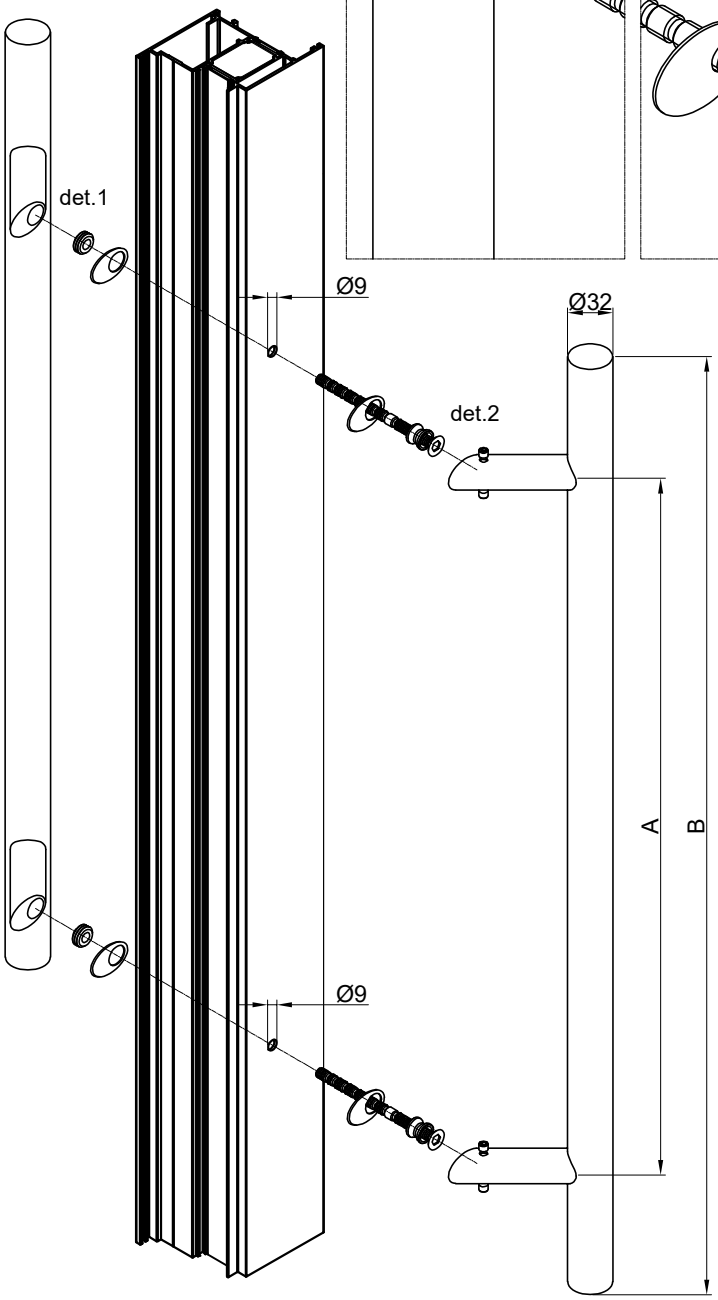


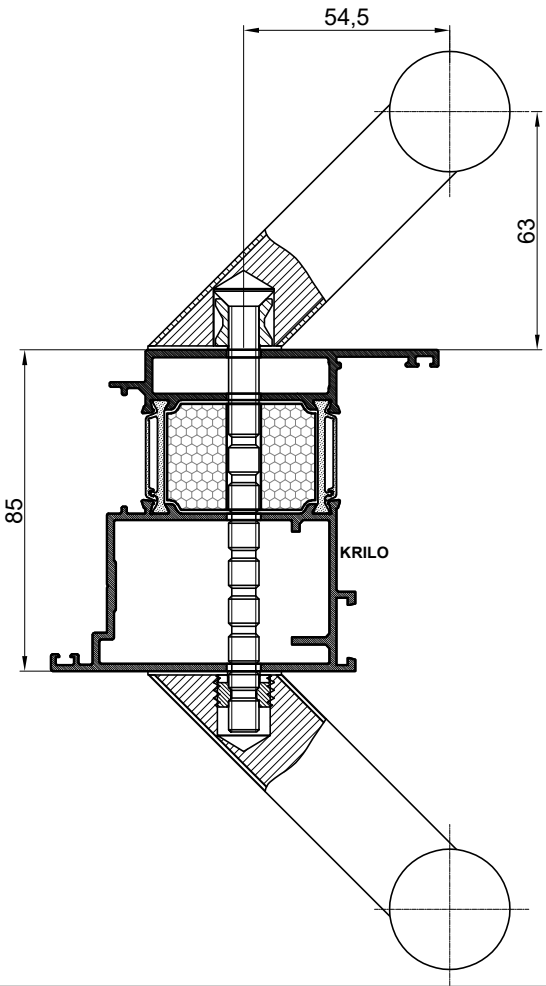


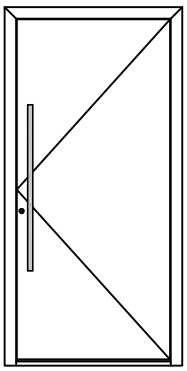
	Mjera "A" Dimension "A"	Mjera "B" Dimension "B"	Oznaka FEAL Code FEAL	Oznaka proizvođača Manufacturer code
1	300	500		114.SS.300.45
2	450	650		114.SS.450.45
3	600	800		114.SS.600.45
4	1200	1400		114.SS.1200.45
5	1300	1800		114.SS.1300.45



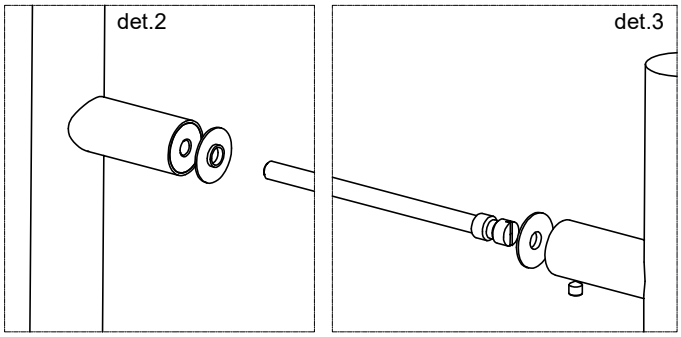


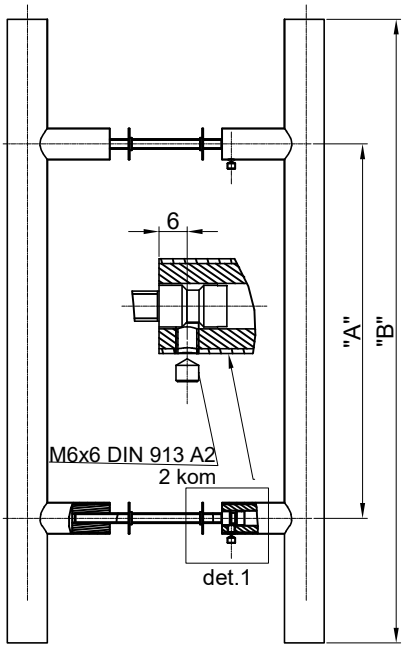


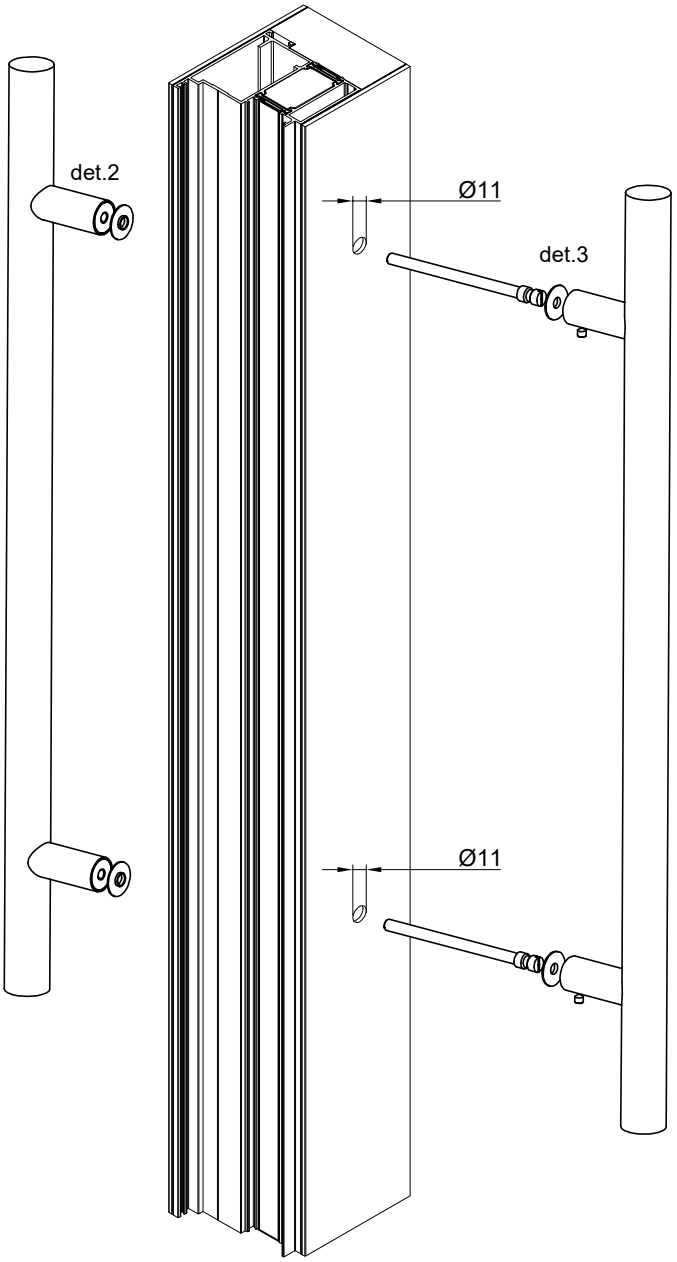


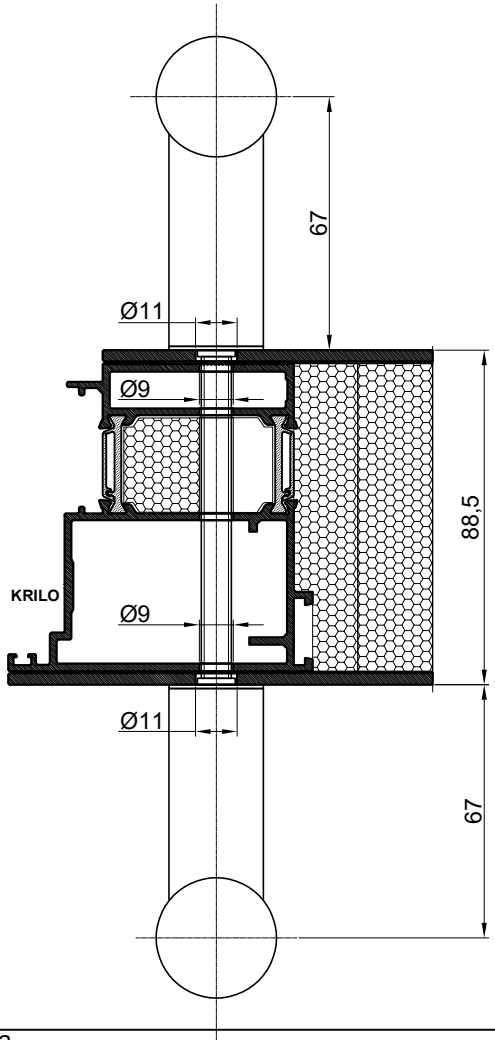


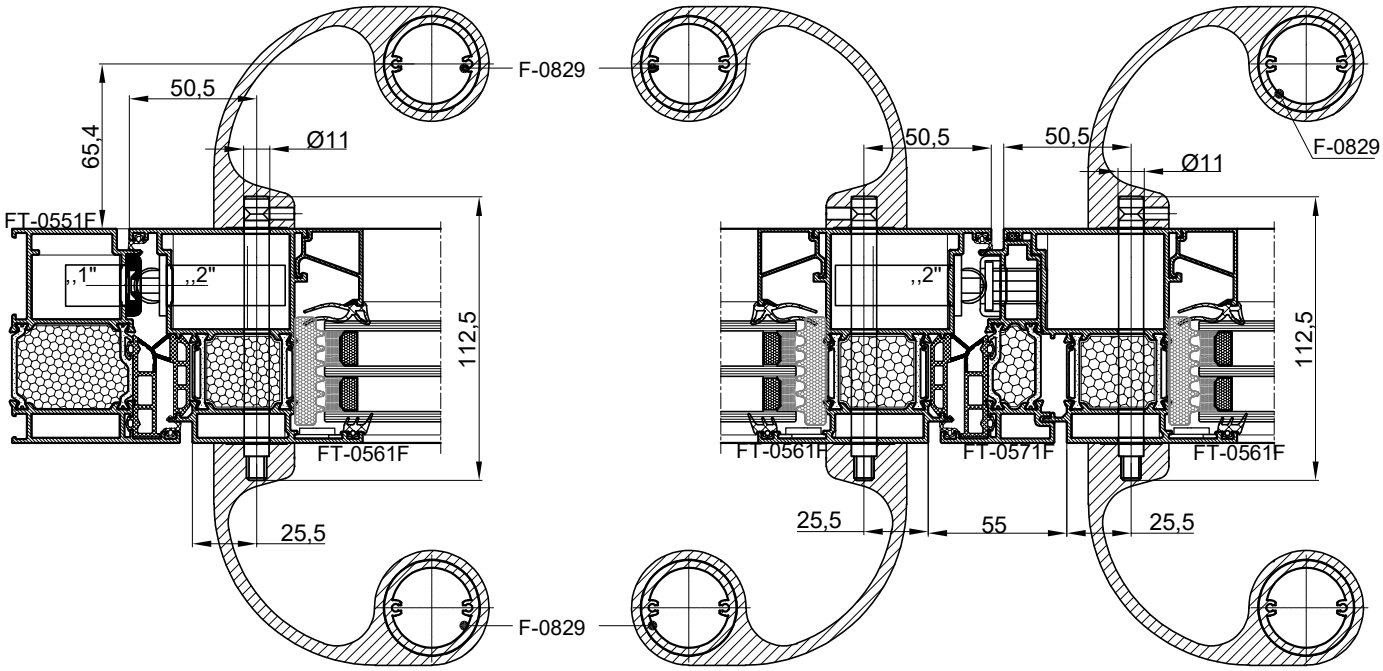
	Mjera "A" Dimension "A"	Mjera "B" Dimension "B"	Oznaka FEAL Code FEAL	Oznaka proizvođača Manufacturer code
1	300	500		114.SS.300.90
2	450	650		114.SS.450.90
3	600	800		114.SS.600.90
4	1200	1400		114.SS.1200.90
5	1300	1800		114.SS.1300.90

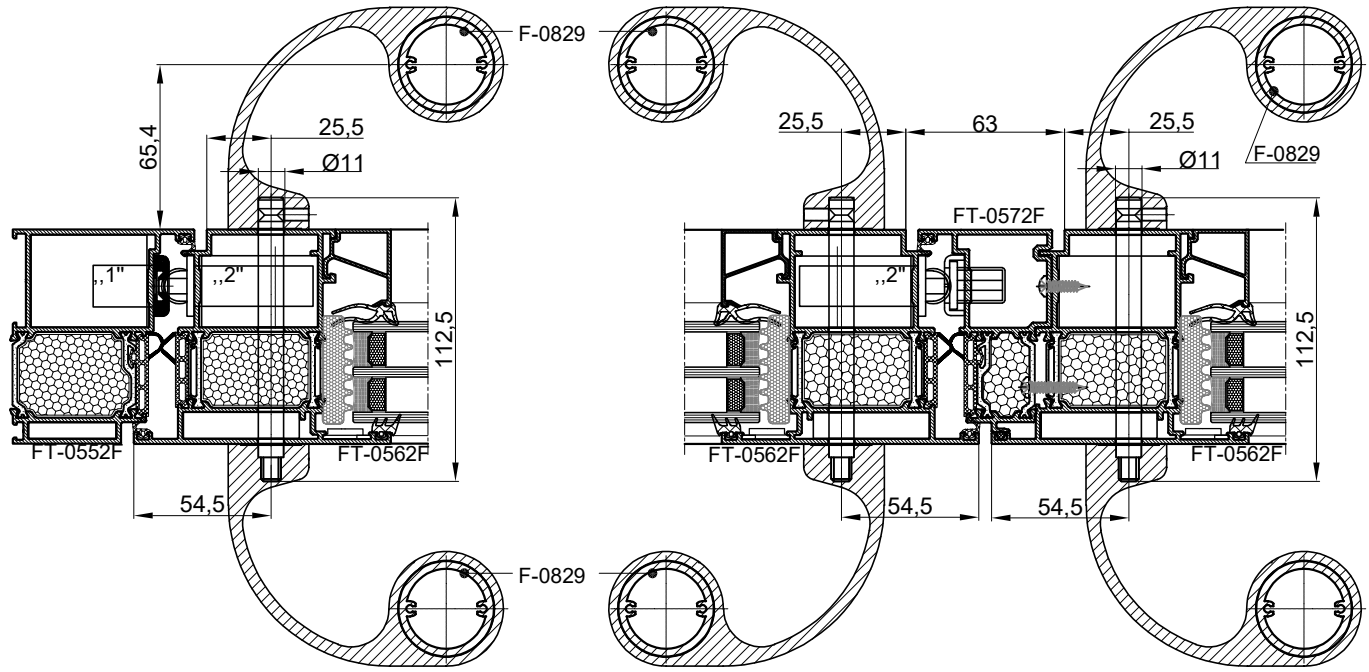


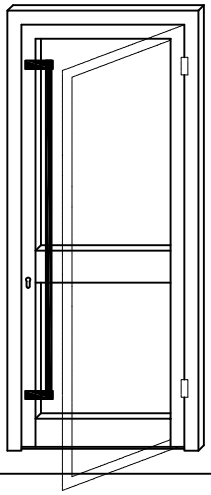


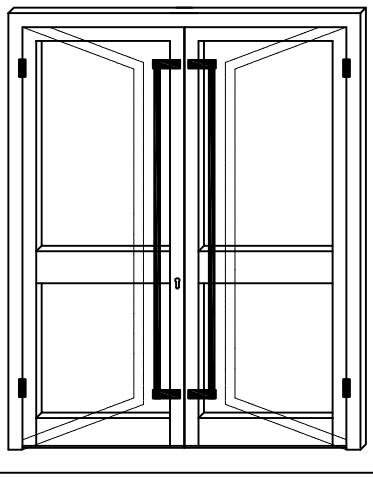






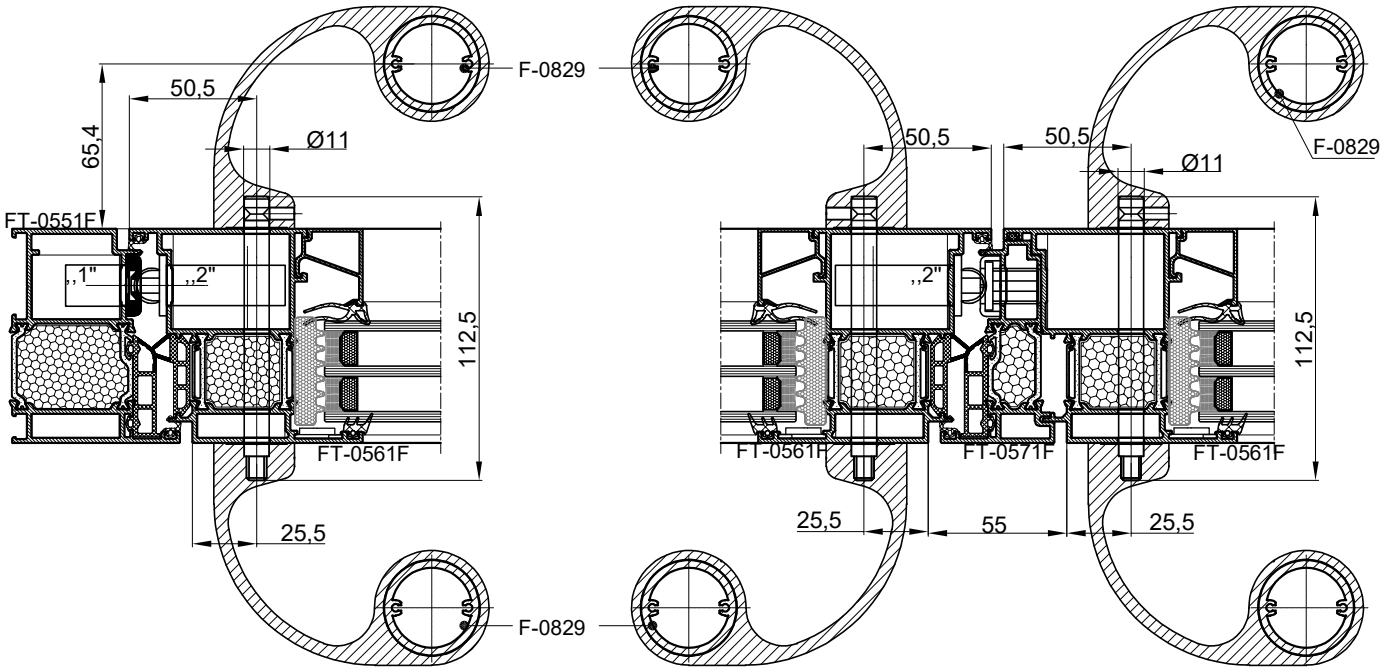


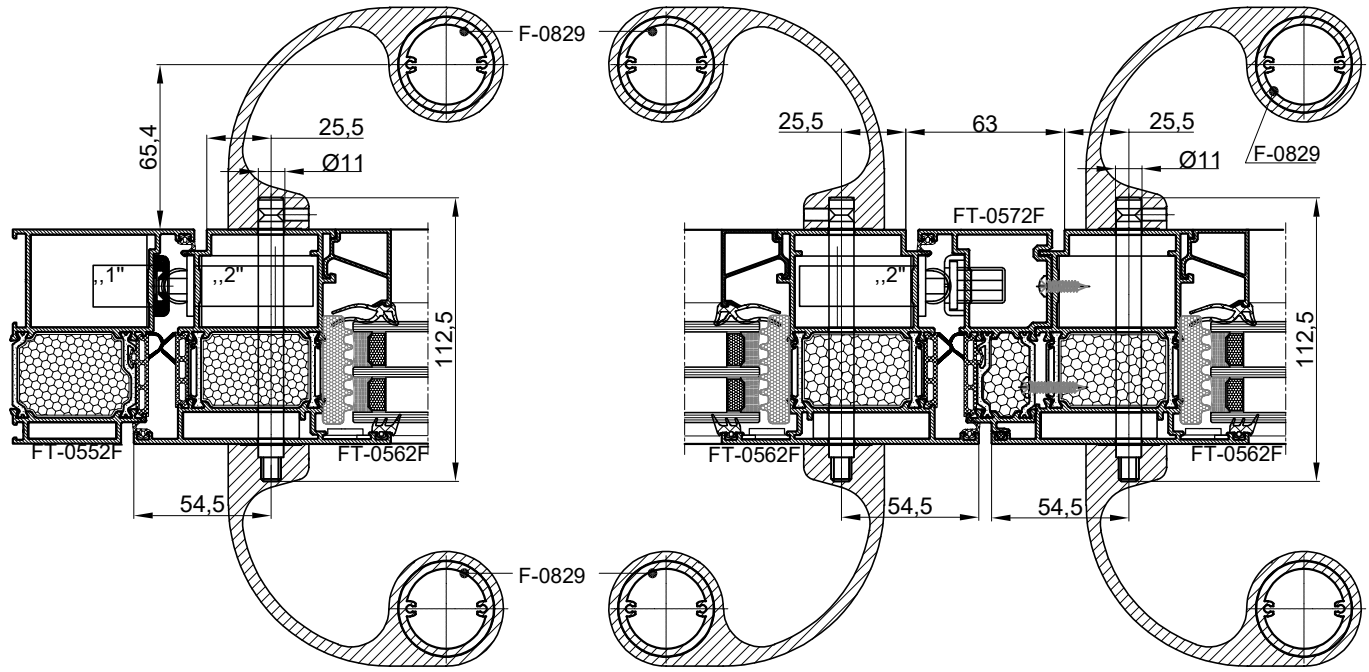


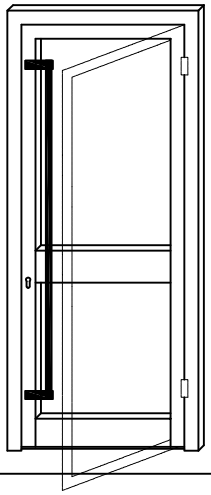


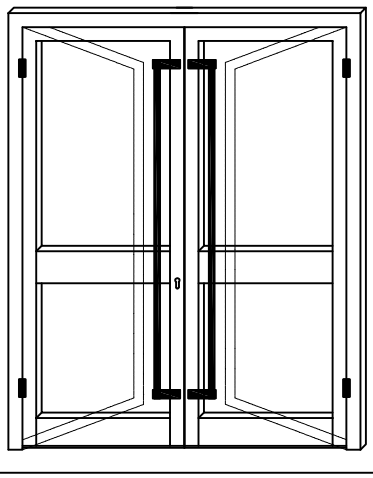
,,1" - 122.042 prihvatnik
,,1" - 122.042 striking plate

,,2" - 122.043 brava sa valjkom
,,2" - 122.043 lock with roller



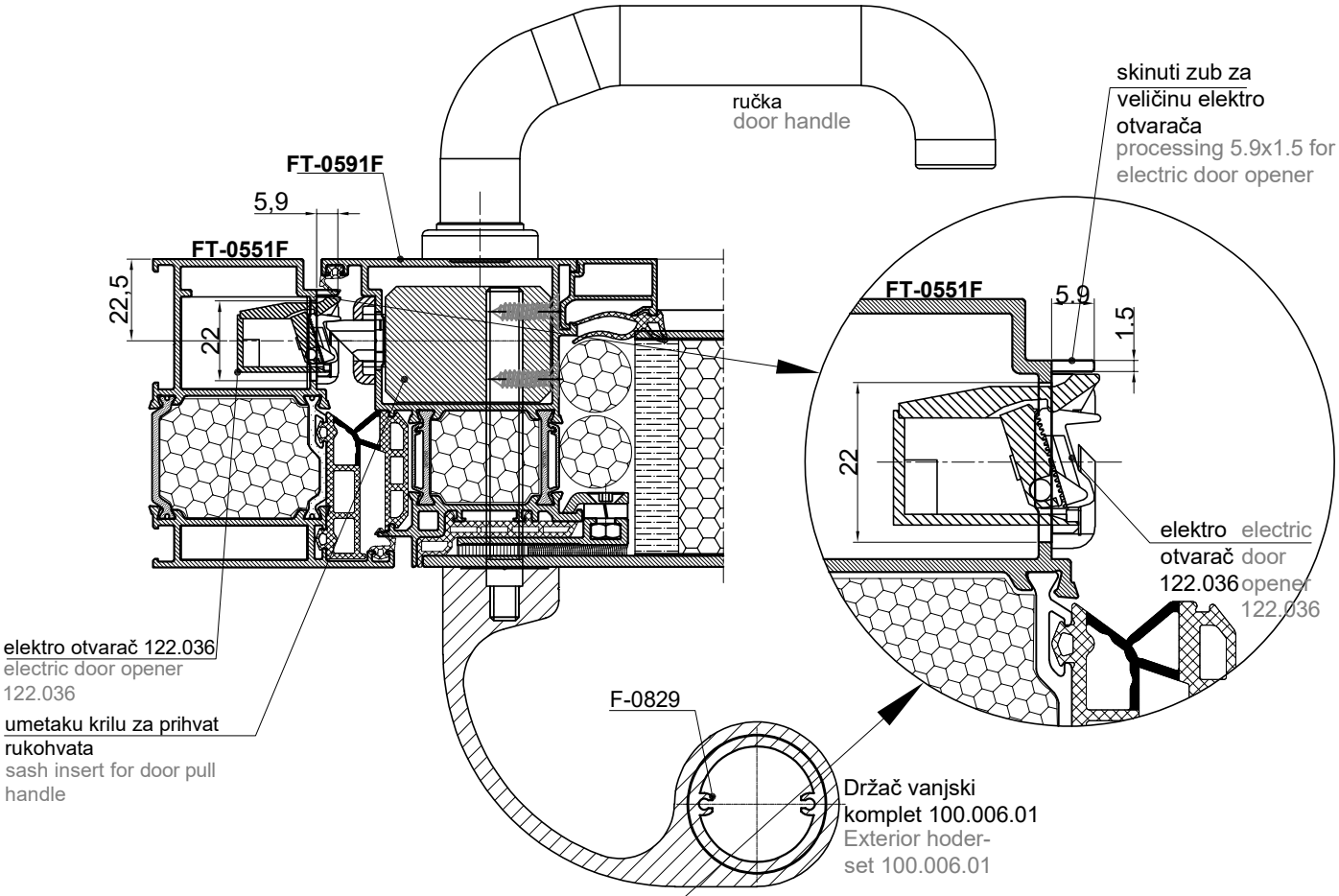


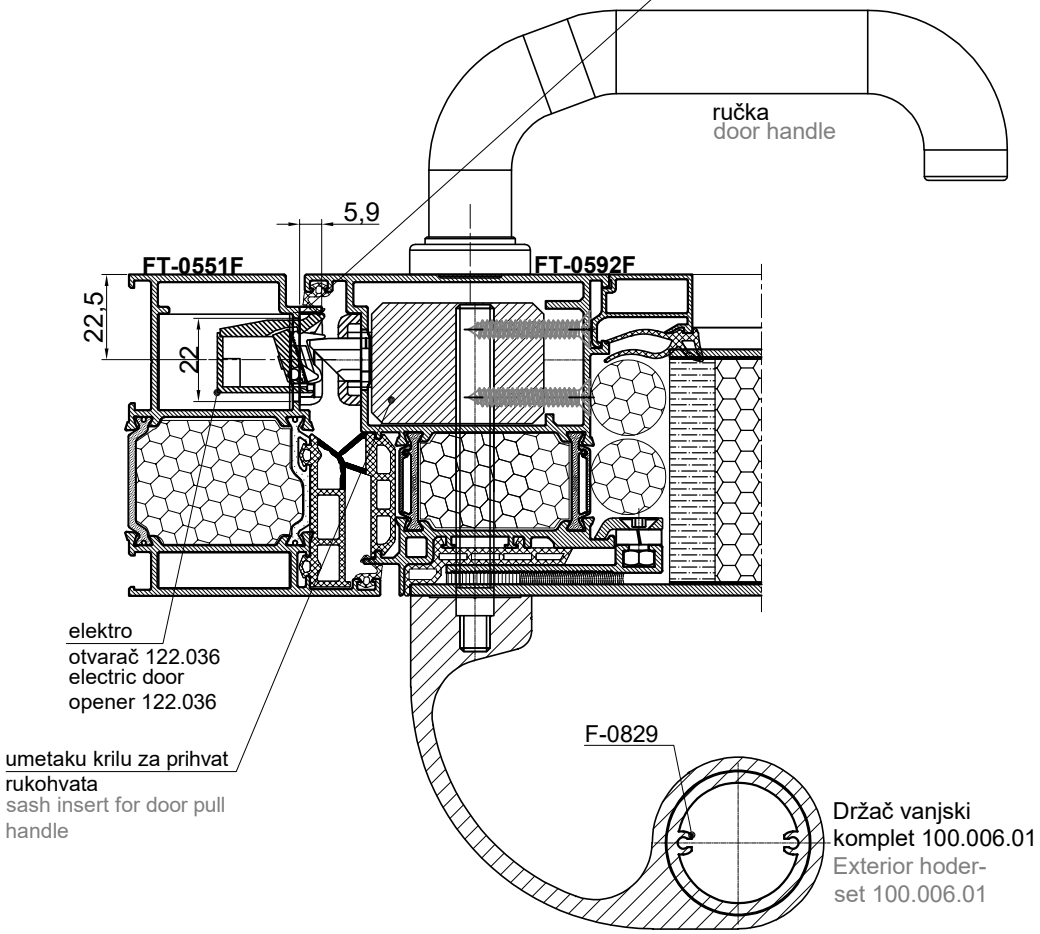




,,1" - 122.042 prihvatnik
,,1" - 122.042 striking plate

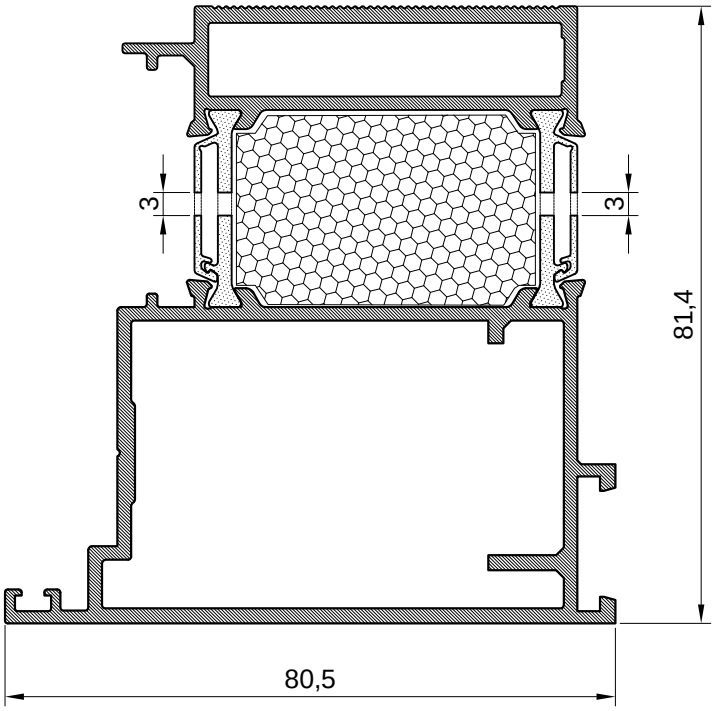
,,2" - 122.043 brava sa valjkom
,,2" - 122.043 lock with roller

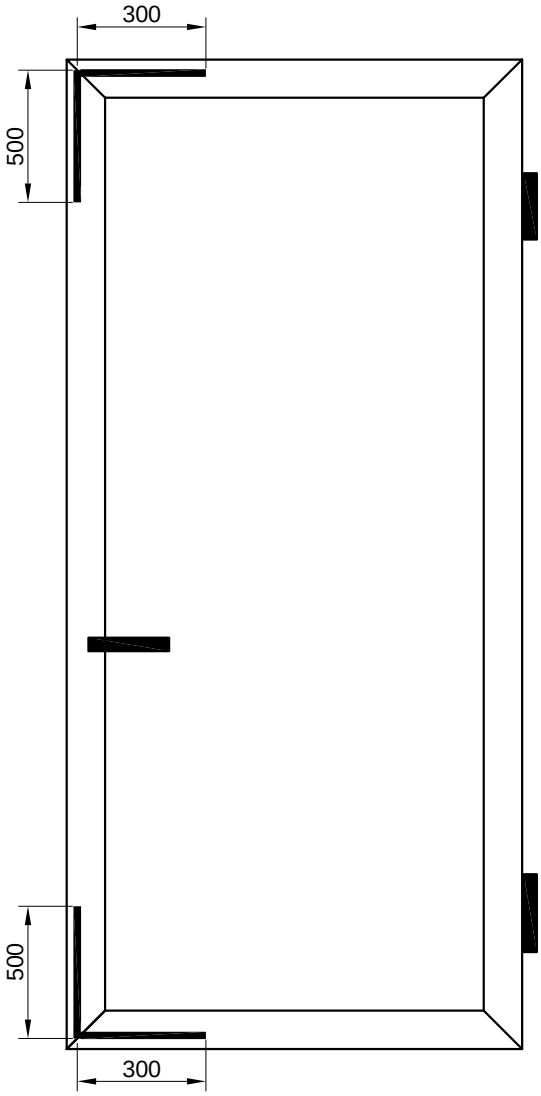

ručka
door handle
FT-0591F
5,9
FT-0551F
22,5
22
skinuti zub za veličinu elektro otvarača
processing 5.9x1.5 for electric door opener
FT-0551F
5.9
1.5
22
elektro otvarač 122.036
electric door opener 122.036
elektro otvarač 122.036
electric door opener 122.036
umetaku krilu za prihvat rukohvata
sash insert for door pull handle
F-0829
Držač vanjski komplet 100.006.01
Exterior hoder-set 100.006.01


ručka
door handle
5,9
FT-0551F
FT-0592F
22,5
22
elektro otvarač 122.036
electric door opener 122.036
umetaku krilu za prihvat rukohvata
sash insert for door pull handle
F-0829
Držač vanjski komplet 100.006.01
Exterior hoder-set 100.006.01

Izrezivanje termo štapića (poliamida) radi kompeziranja širenja profila
Cutting thermo sticks (polyamide) to compesate for profile spreading

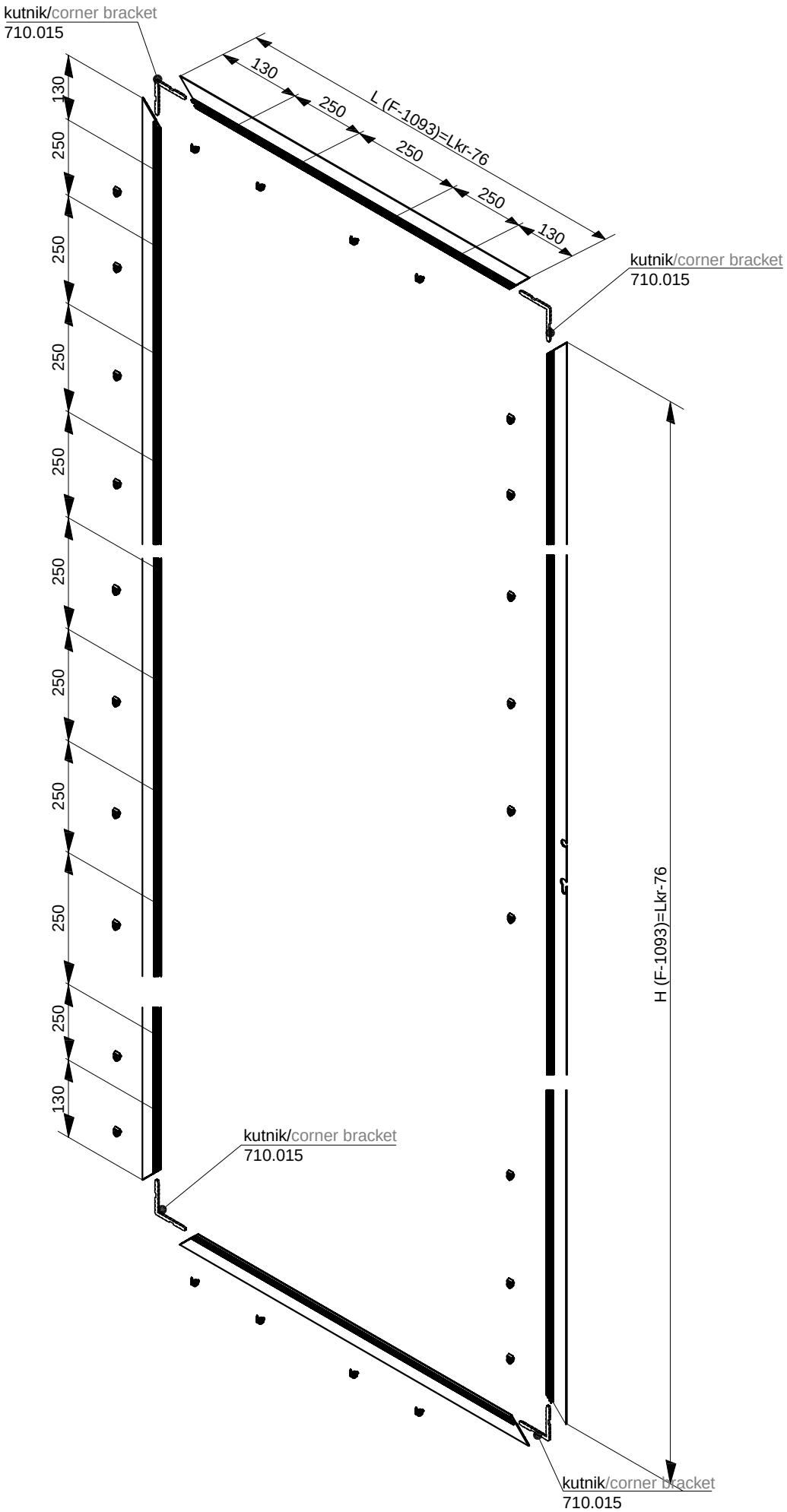
Profil krila-VP vrata (obostrano ravni lim)
Profile sash-VP door (both side hidden sash)

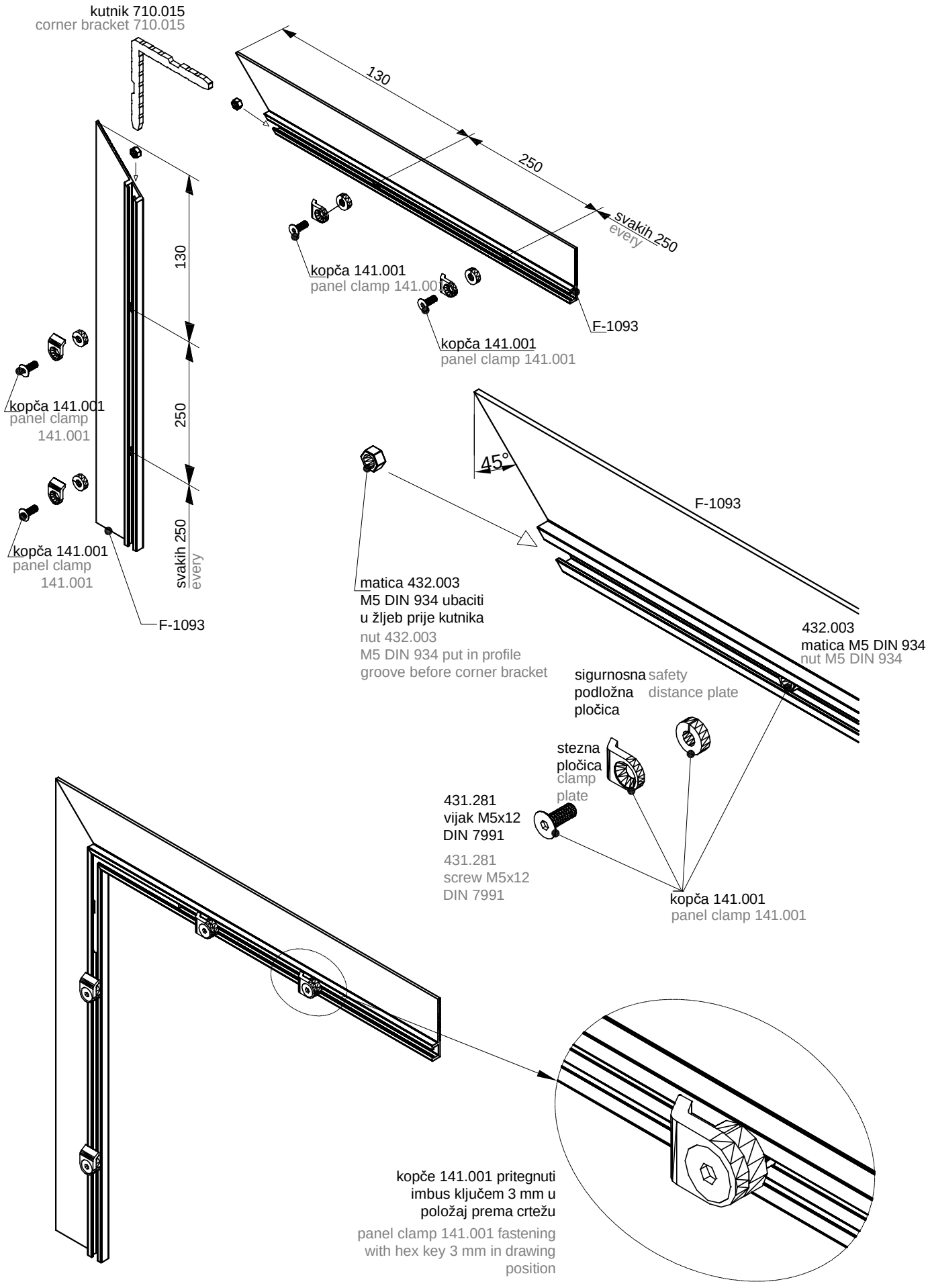


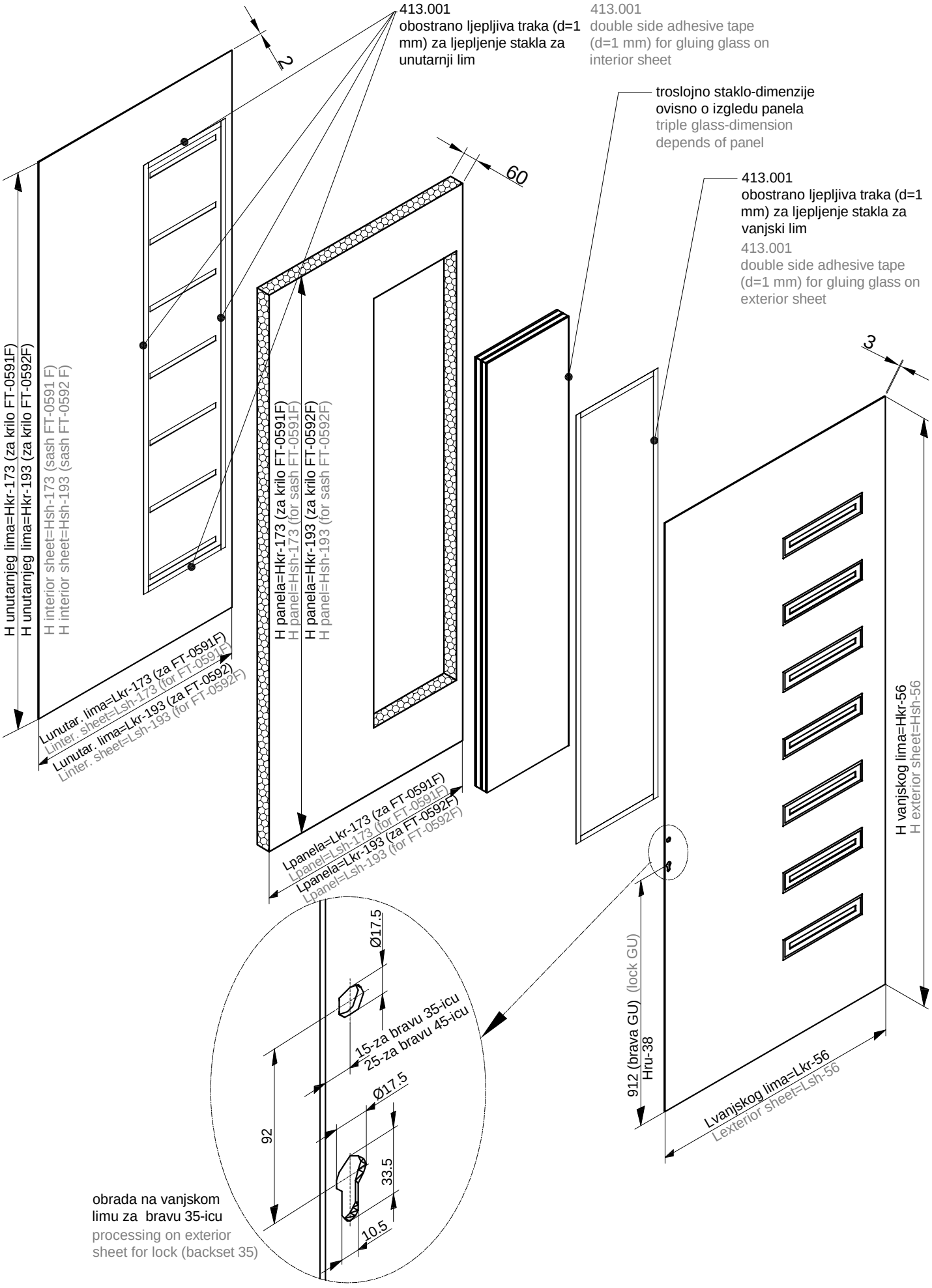


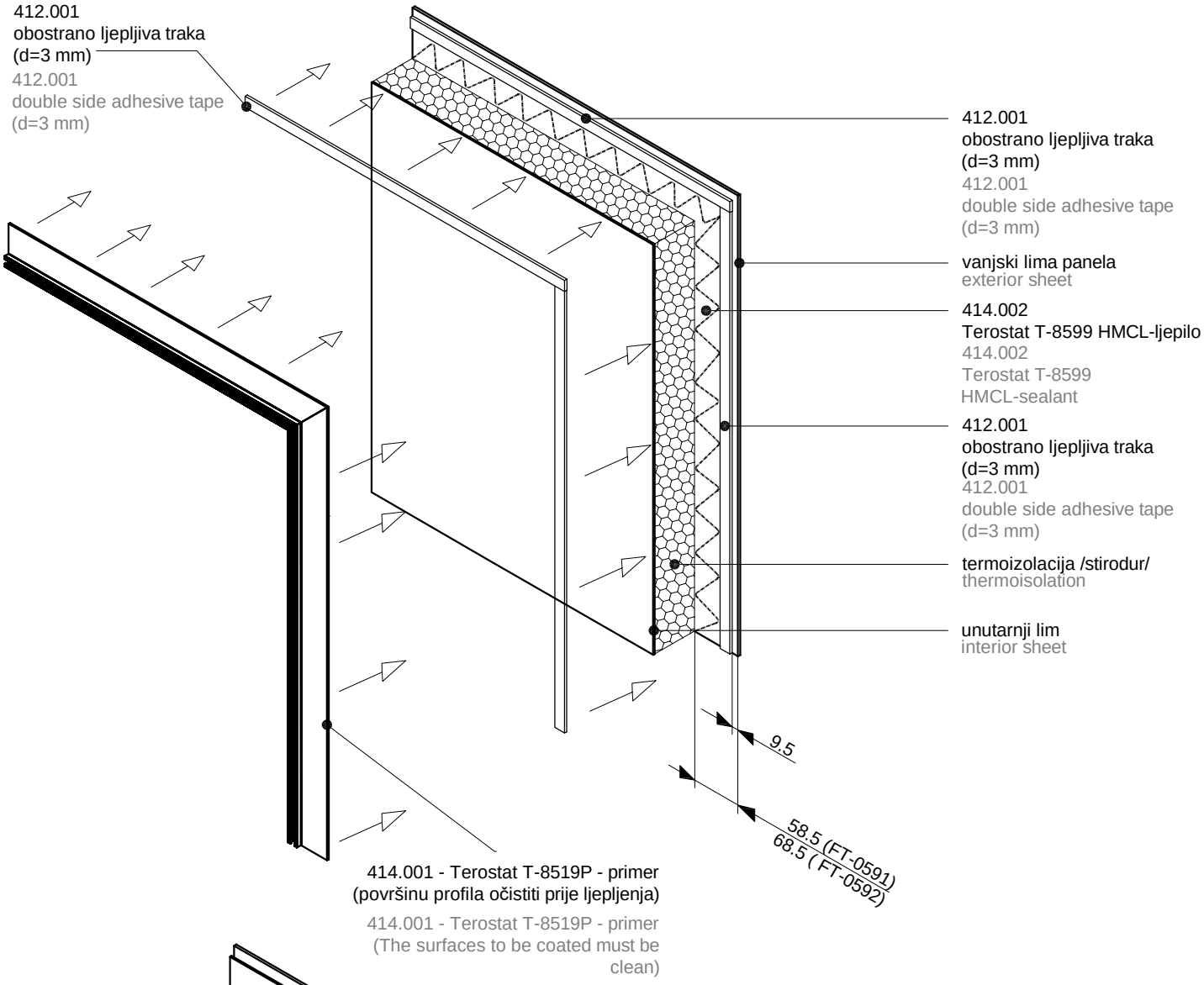
Pozicija izrezivanja termo štapića(poliamida) na krilu

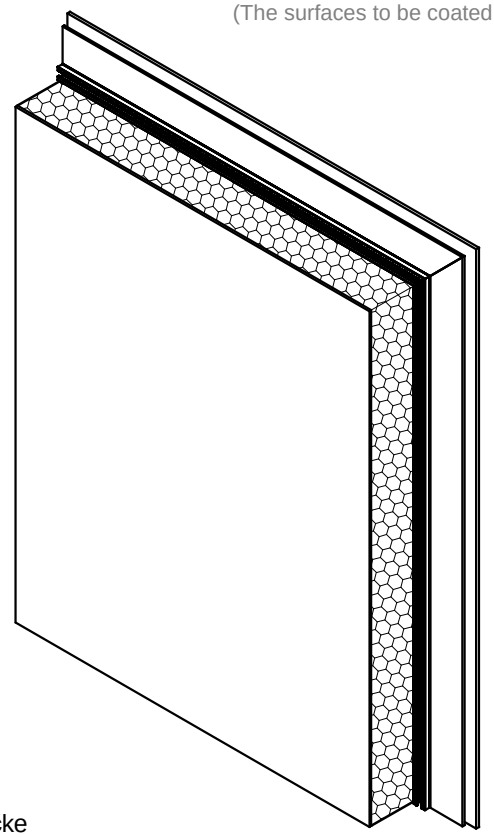
Position of cutting thermo stics (polyamide) on sash


kutnik/corner bracket
710.015
130
250
250
250
250
250
250
250
250
250
250
130
130
250
250
250
L (F-1093)=Lkr-76
130
kutnik/corner bracket
710.015
H (F-1093)=Lkr-76
kutnik/corner bracket
710.015
kutnik/corner bracket
710.015

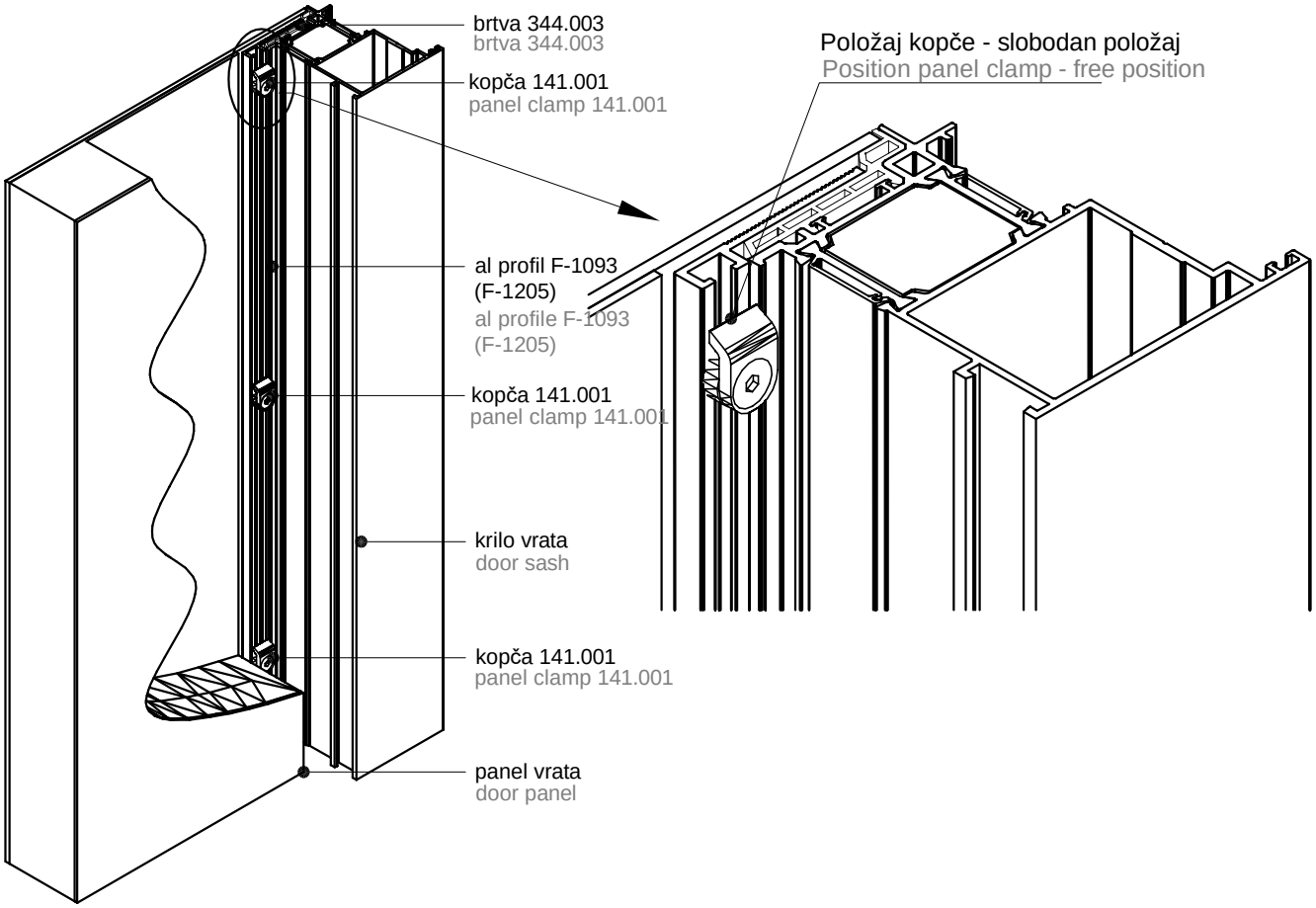

kutnik 710.015
corner bracket 710.015
130
250
svakih 250
every
kopča 141.001
panel clamp 141.001
F-1093
kopča 141.001
panel clamp 141.001
kopča 141.001
panel clamp 141.001
130
250
svakih 250
every
F-1093
45°
F-1093
matica 432.003
M5 DIN 934 ubaciti
u žljeb prije kutnika
nut 432.003
M5 DIN 934 put in profile
groove before corner bracket
432.003
matica M5 DIN 934
nut M5 DIN 934
sigurnosna podložna pločica
safety distance plate
stezna pločica
clamp plate
431.281
vijak M5x12
DIN 7991
431.281
screw M5x12
DIN 7991
kopča 141.001
panel clamp 141.001
kopče 141.001 pritegnuti
imbus ključem 3 mm u
položaj prema crtežu
panel clamp 141.001 fastening
with hex key 3 mm in drawing
position

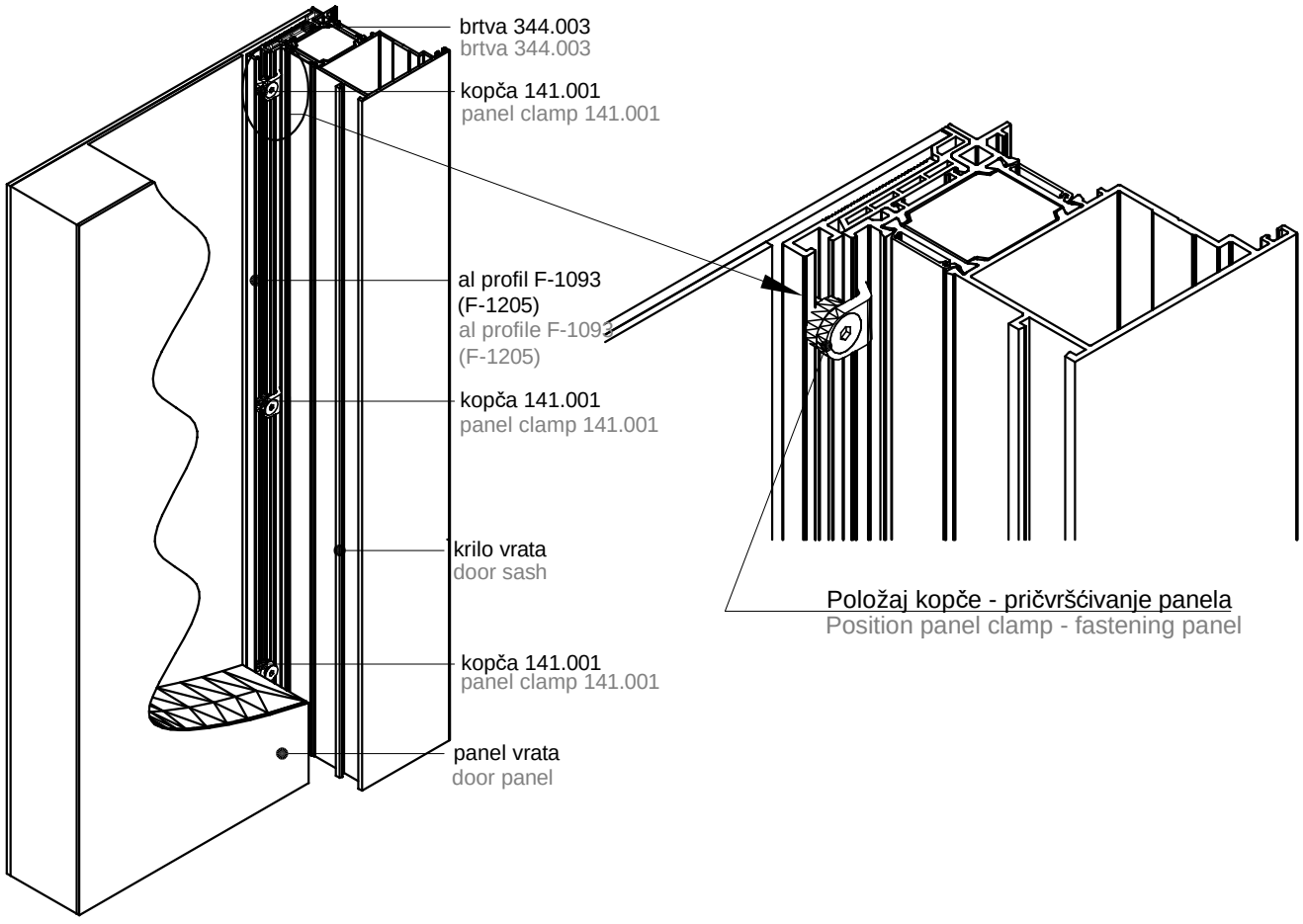

413.001
obostrano ljepljiva traka (d=1 mm) za ljepljenje stakla za unutarnji lim
413.001
double side adhesive tape (d=1 mm) for gluing glass on interior sheet
troslojno staklo-dimenzije ovisno o izgledu panela
triple glass-dimension depends of panel
413.001
obostrano ljepljiva traka (d=1 mm) za ljepljenje stakla za vanjski lim
413.001
double side adhesive tape (d=1 mm) for gluing glass on exterior sheet
2
60
3
H unutarnjeg lima=Hkr-173 (za krilo FT-0591F)
H unutarnjeg lima=Hkr-193 (za krilo FT-0592F)
H interior sheet=Hsh-173 (sash FT-0591 F)
H interior sheet=Hsh-193 (sash FT-0592 F)
Lunutar. lima=Lkr-173 (za FT-0591F)
Linter. sheet=Lsh-173 (for FT-0591F)
Lunutar. lima=Lkr-193 (za FT-0592)
Linter. sheet=Lsh-193 (for FT-0592F)
H panela=Hkr-173 (za krilo FT-0591F)
H panel=Hsh-173 (for sash FT-0591F)
H panela=Hkr-193 (za krilo FT-0592F)
H panel=Hsh-193 (for sash FT-0592F)
Lpanela=Lkr-173 (za FT-0591F)
Lpanel=Lsh-173 (for FT-0591F)
Lpanela=Lkr-193 (za FT-0592F)
Lpanel=Lsh-193 (for FT-0592F)
H vanjskog lima=Hkr-56
H exterior sheet=Hsh-56
912 (brava GU) (lock GU)
Hru-38
Lvanjskog lima=Lkr-56
Lexterior sheet=Lsh-56
Ø17.5
15-za bravu 35-icu
25-za bravu 45-icu
Ø17.5
92
33.5
10.5
obrada na vanjskom limu za bravu 35-icu
processing on exterior sheet for lock (backset 35)



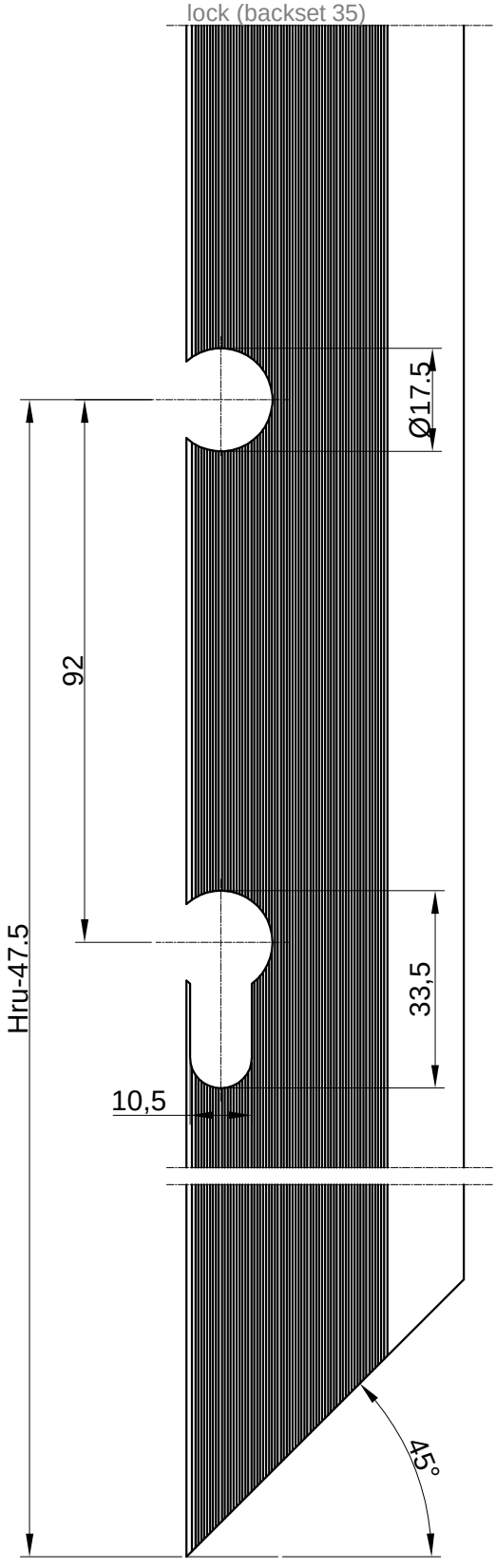


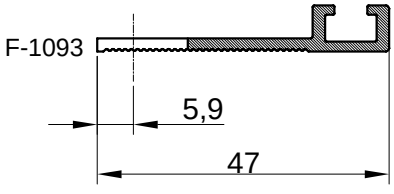
Hru-visina ručke
Hru-height door handel


brtva 344.003
brtva 344.003
kopča 141.001
panel clamp 141.001
al profil F-1093
(F-1205)
al profile F-1093
(F-1205)
kopča 141.001
panel clamp 141.001
krilo vrata
door sash
kopča 141.001
panel clamp 141.001
panel vrata
door panel
Položaj kopče - slobodan položaj
Position panel clamp - free position

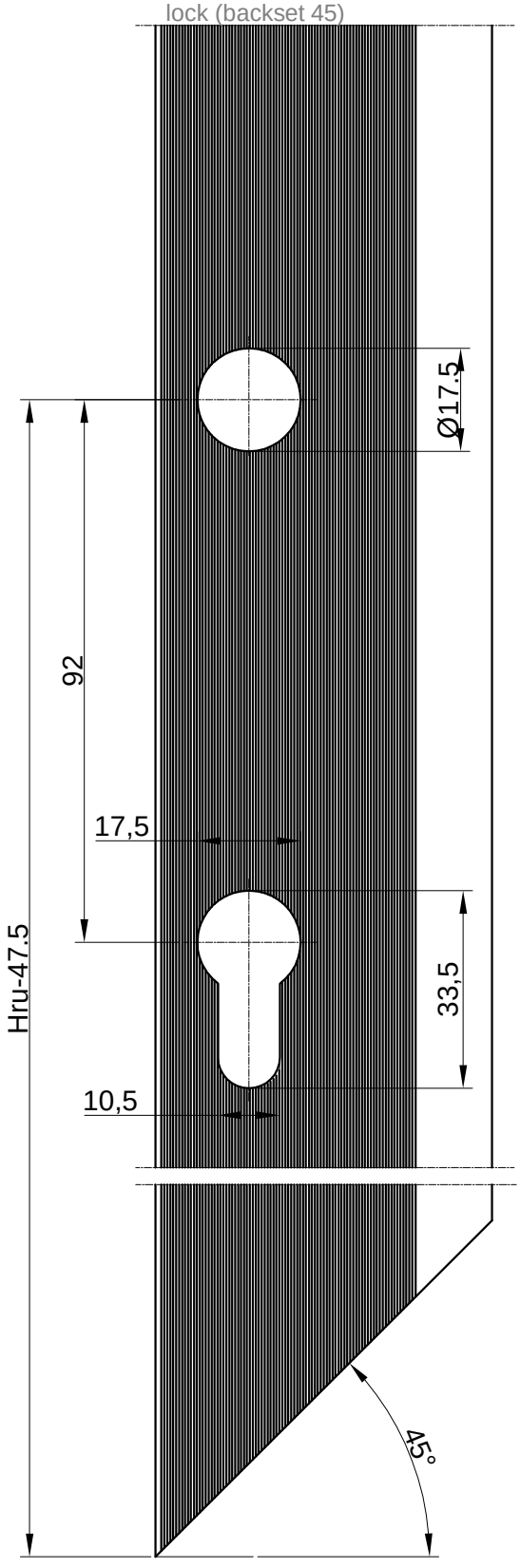

brtva 344.003
brtva 344.003
kopča 141.001
panel clamp 141.001
al profil F-1093
(F-1205)
al profile F-1093
(F-1205)
kopča 141.001
panel clamp 141.001
krilo vrata
door sash
kopča 141.001
panel clamp 141.001
panel vrata
door panel
Položaj kopče - pričvršćivanje panela
Position panel clamp - fastening panel

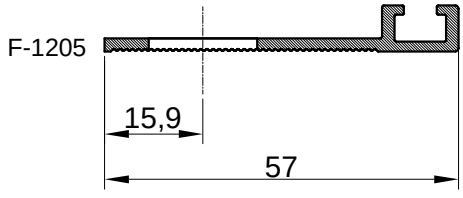
obrada profila F-1093 za bravu 35-icu
processing profile F-1093 for lock (backset 35)



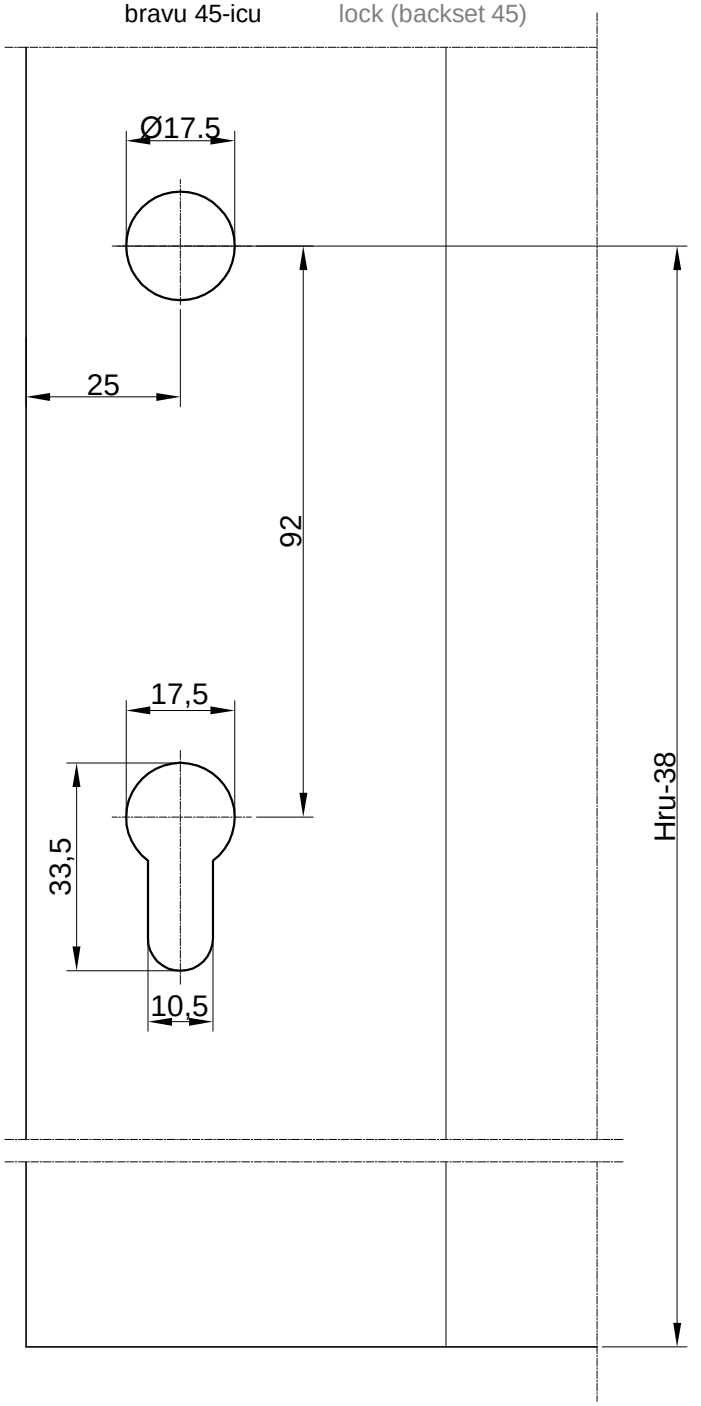


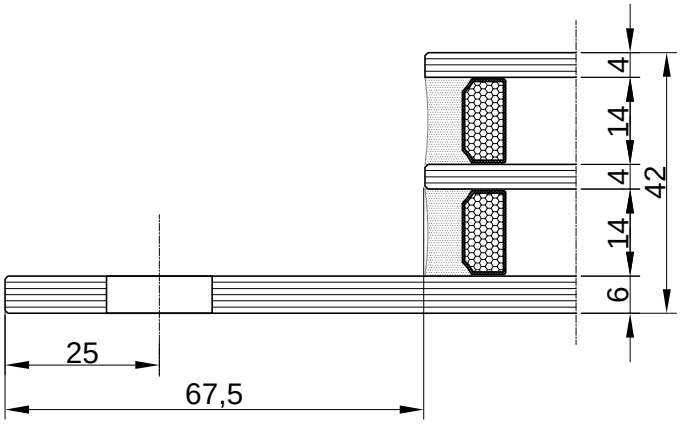
obrada profila F-1205 za bravu 45-icu
processing profile F-1205 for lock (backset 45)





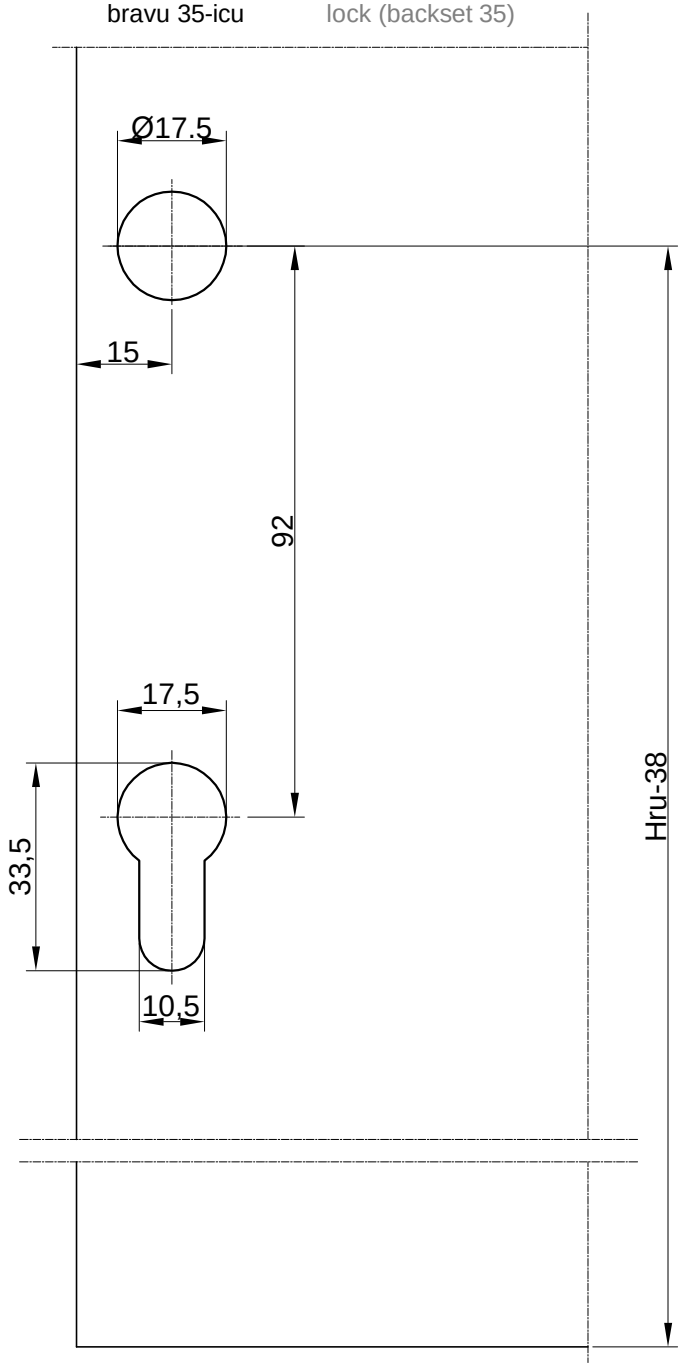
obrada stakla za bravu 45-icu
glas processing for lock (backset 45)

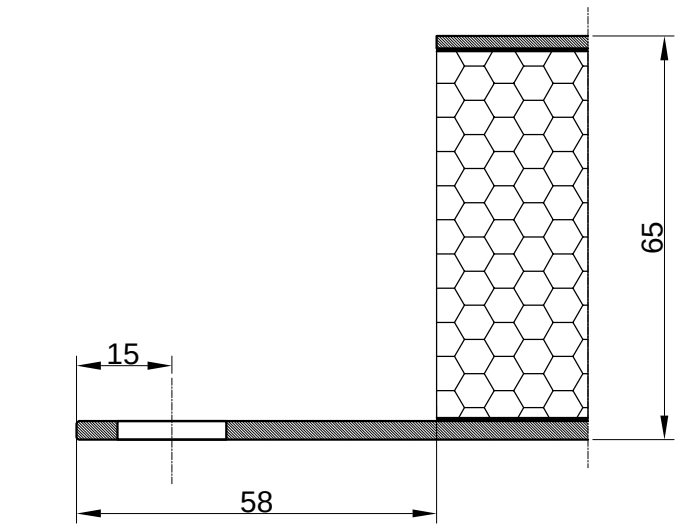




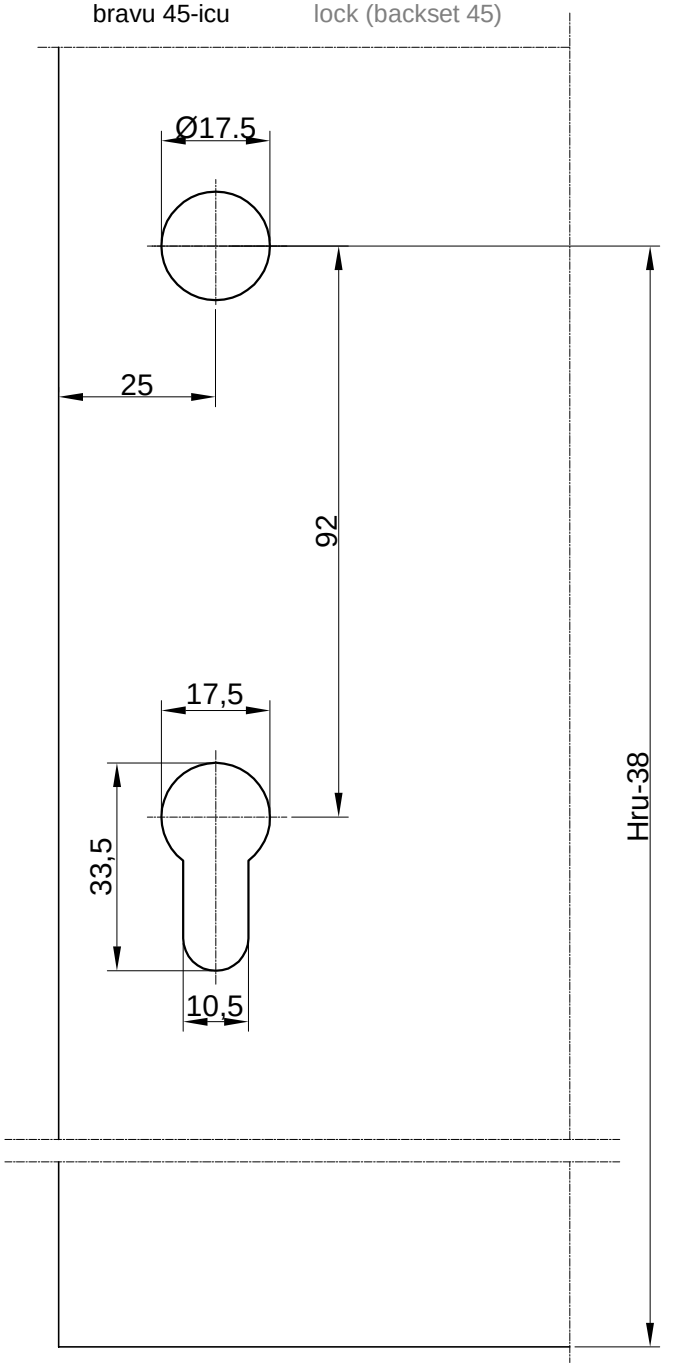
prepust za krilo FT-0592F
for sash FT-0592F

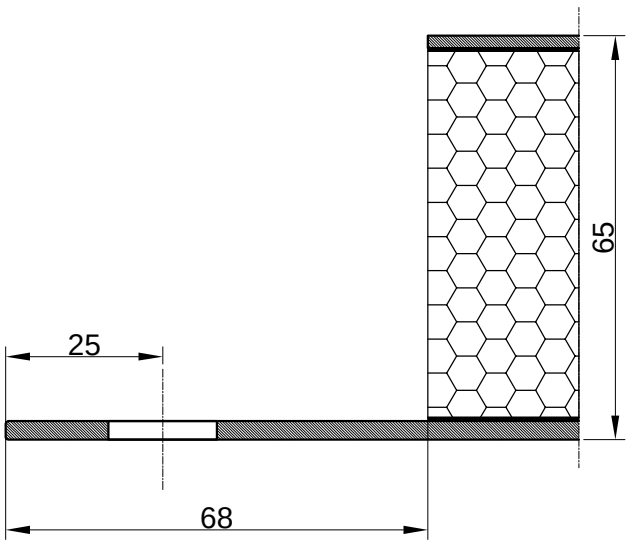
obrada panela za bravu 35-icu / panel processing for lock (backset 35)

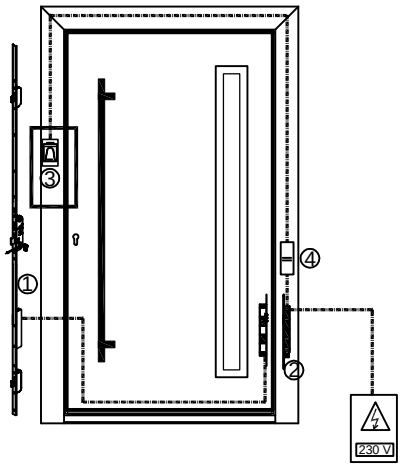


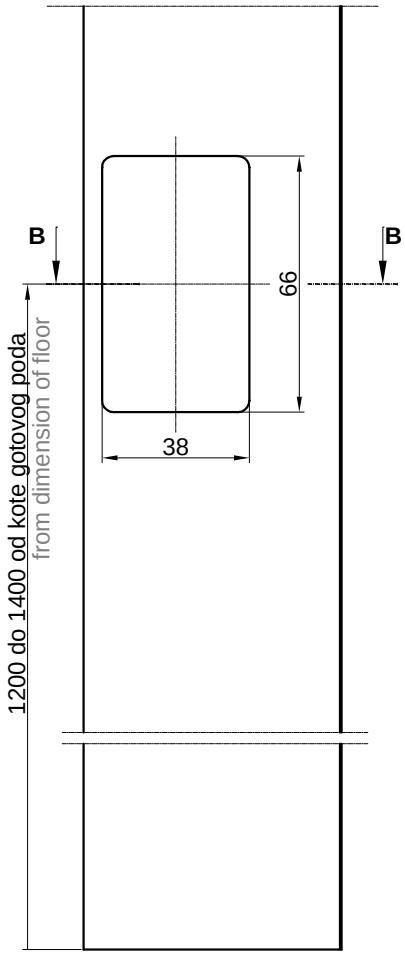


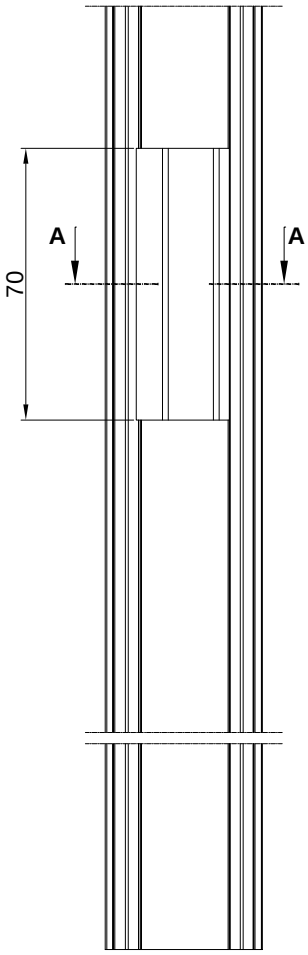
obrada panela za bravu 45-icu / panel processing for lock (backset 45)

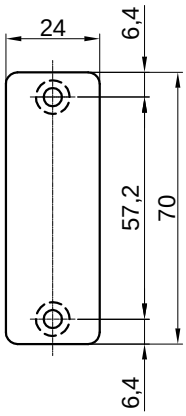


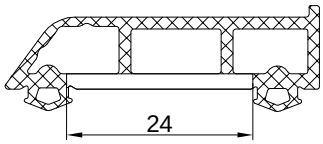




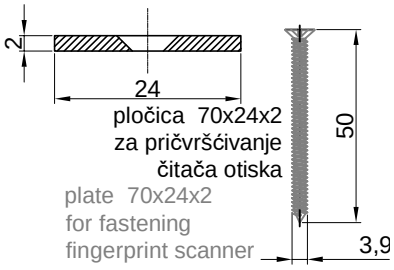






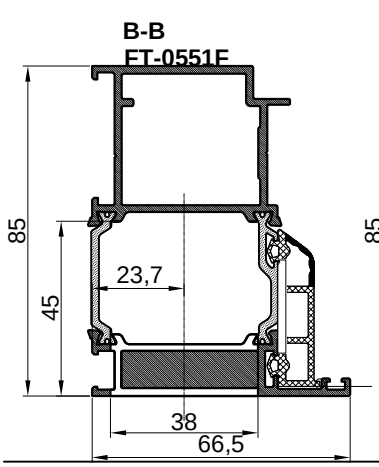


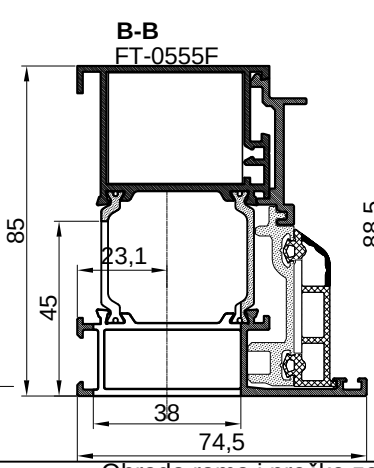
A-A
M 2:1
obrada brtve 331.010
za prihvat pločice
processing on gasket
331.010
for plate 70x24x2

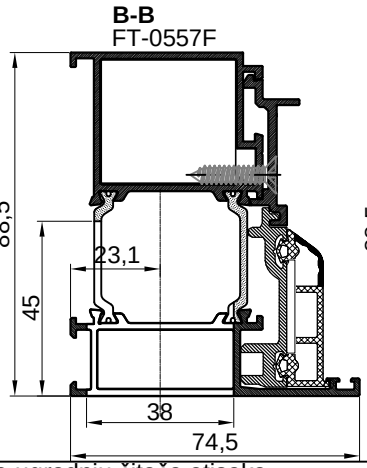


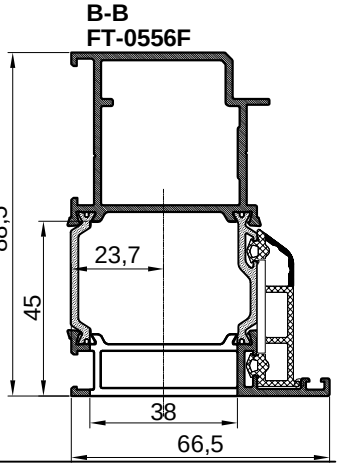
pločica 70x24x2
za pričvršćivanje
čitača otiska
plate 70x24x2
for fastening
fingerprint scanner

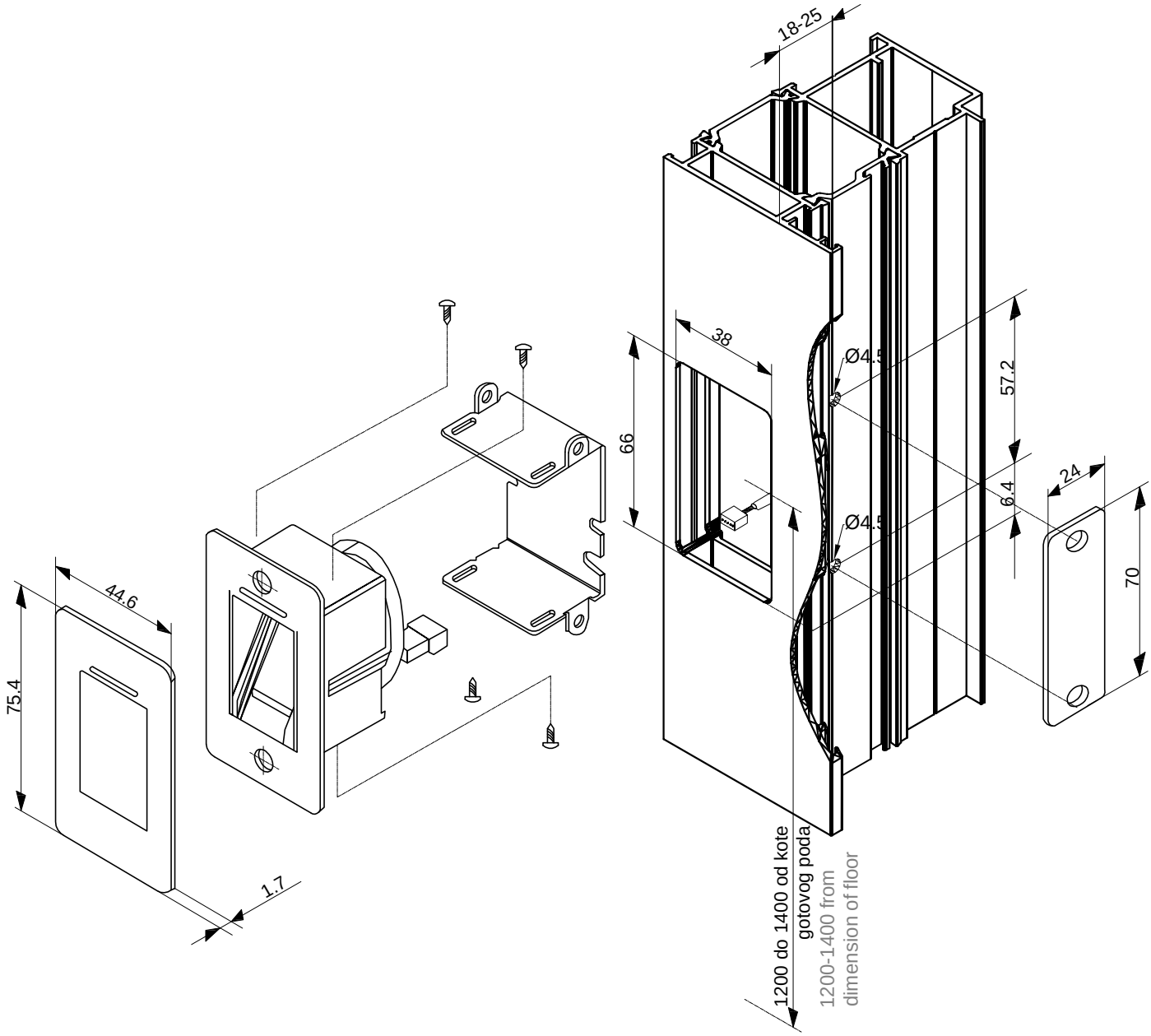
3.9x50
DIN 7982





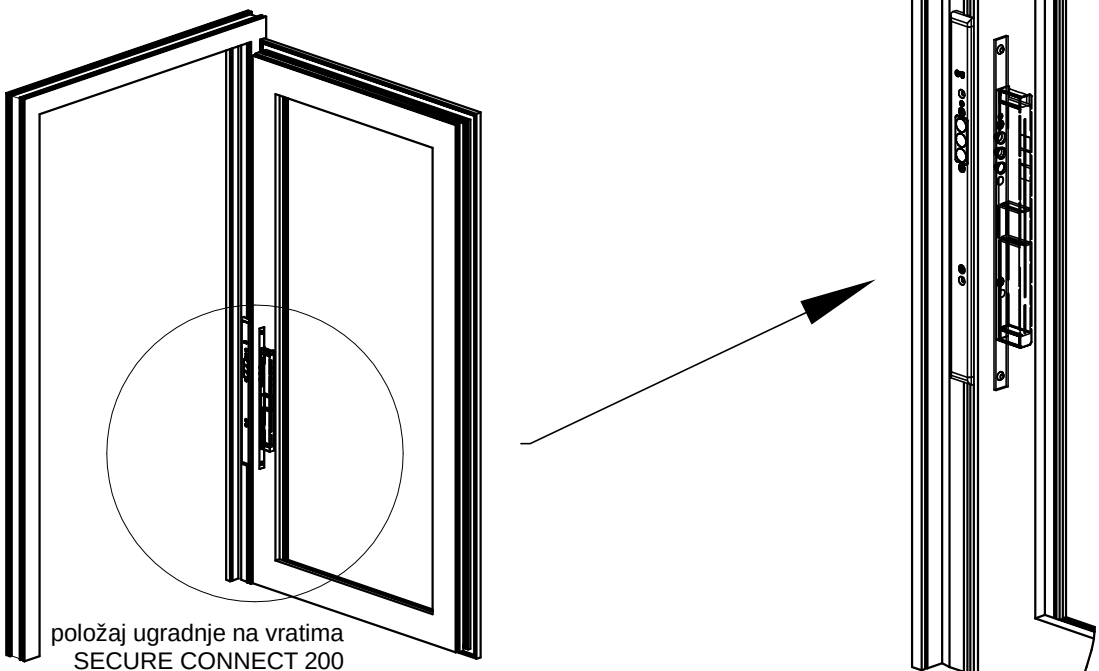




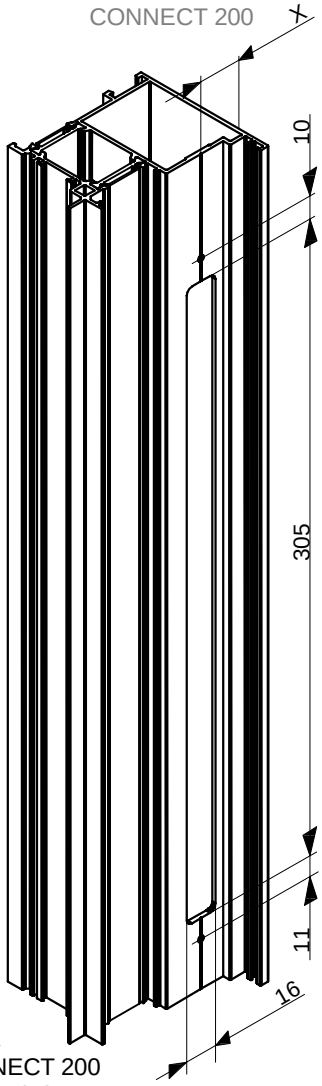


Za montažu modula je potrebno napraviti udubljenje veličine 38x66 mm, dubine 45 mm. Preporučena visina montaže modula je 1200 do 1400 mm od kote gotovog poda. Priključni vod je potrebno položiti unutar profila ka udubljenju za montažu modula. Modul se priloženim vijcima dimenzija 3.9x50 bočno iz utora okova pričvršćuje u profil.
Montažni okvir se, ako je potrebno zaokrnuti za 180°, mora pričvrstit na modul. Udubljenje za pričvršćivanje većeg prečnika je potrebno uvijek usmjeriti prema utoru okova.
Položaj bočnog pričvršćivanja od prednje strane profila može varirati u opsegu od 18.7 do 23.5 mm preko duguljastih rupa montažnog kutnika.
Na kraju se nalijepi dekorativni završni profil. Ljepljive trake za to se nalaze na unutrašnjoj strani završnog profila.

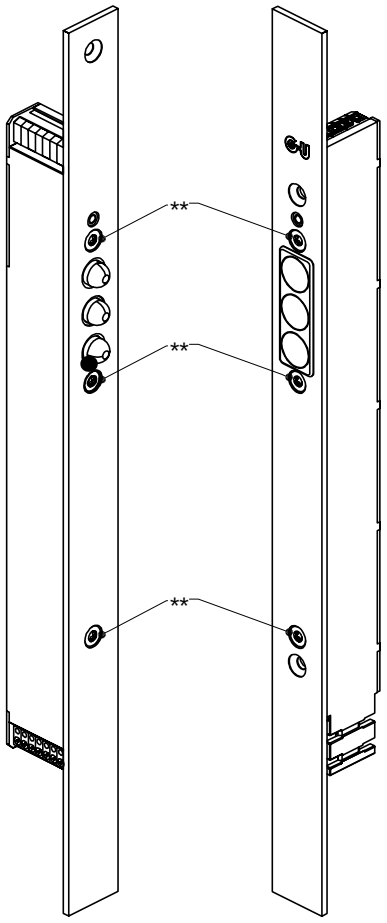
For mounting the module, it is necessary to make a recess 38x66 mm, depth 45 mm.
The recommended mounting height of the module is 1200 to 1400 mm from the finished floor.
The connection cable must be laid inside the profile to the module recess. The module is attached to the profile with the supplied screws 3.9x50 in length from the slot.
The mounting frame must be attached to the module if it is necessary to rotate by 180 °. Always align the recess for fastening the larger diameter to the slot groove.
The lateral fixation position from the front of the profile may vary from 18.7 to 23.5 mm across the longitudinal hole of the mounting bracket.
Finally the decorative end profile is pasted. Adhesive tapes for this are on the inside of the end profile



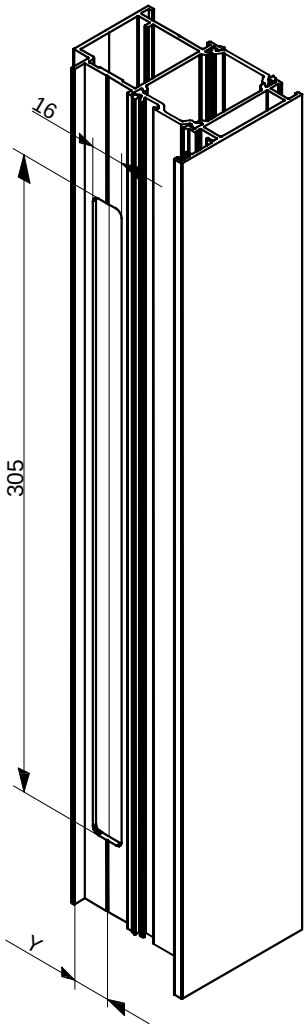
položaj ugradnje na vratima SECURE CONNECT 200
position in door SECURE CONNECT 200



obrada krila za SECURE CONNECT 200
processing on sash for SECURE CONNECT 200

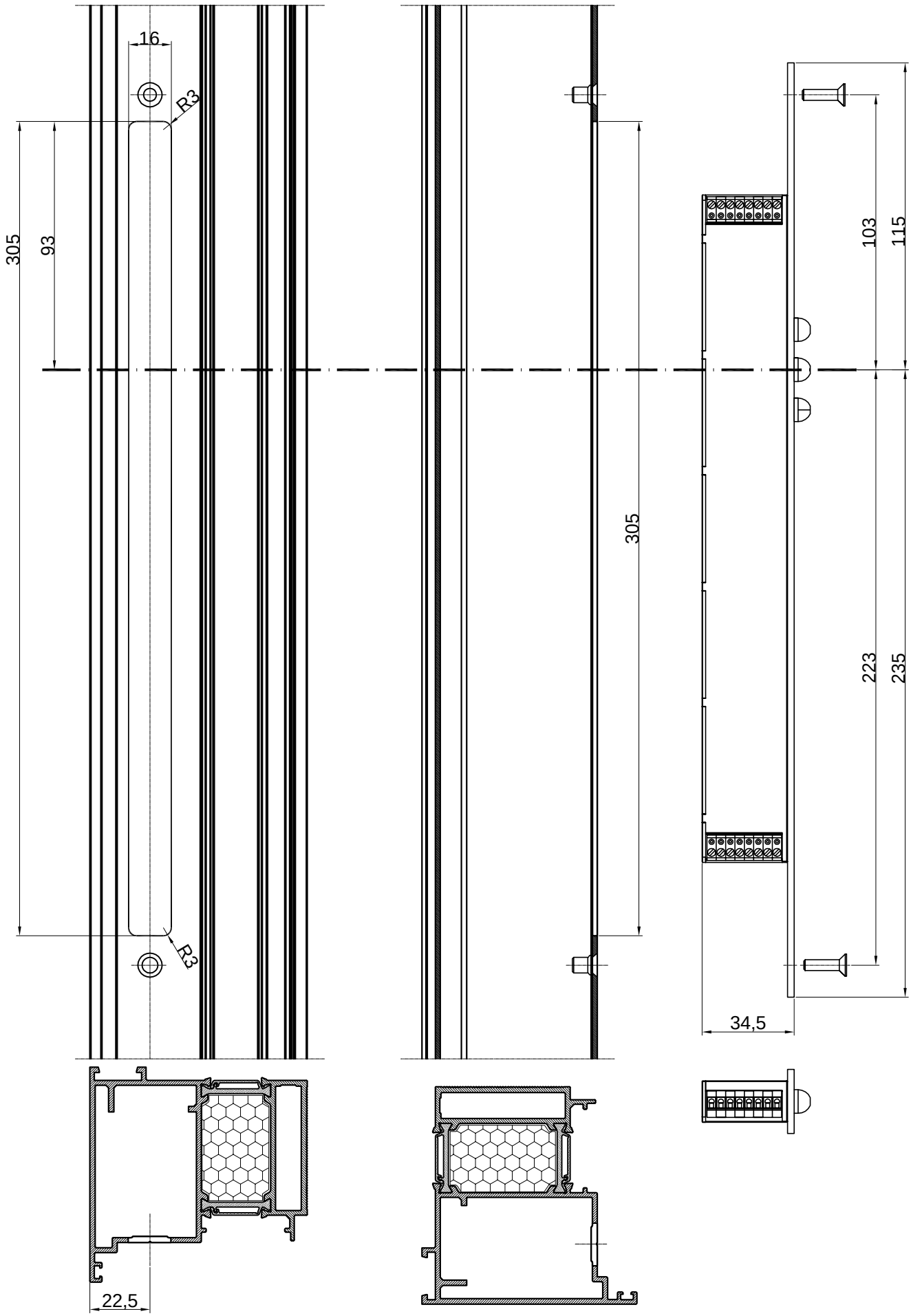


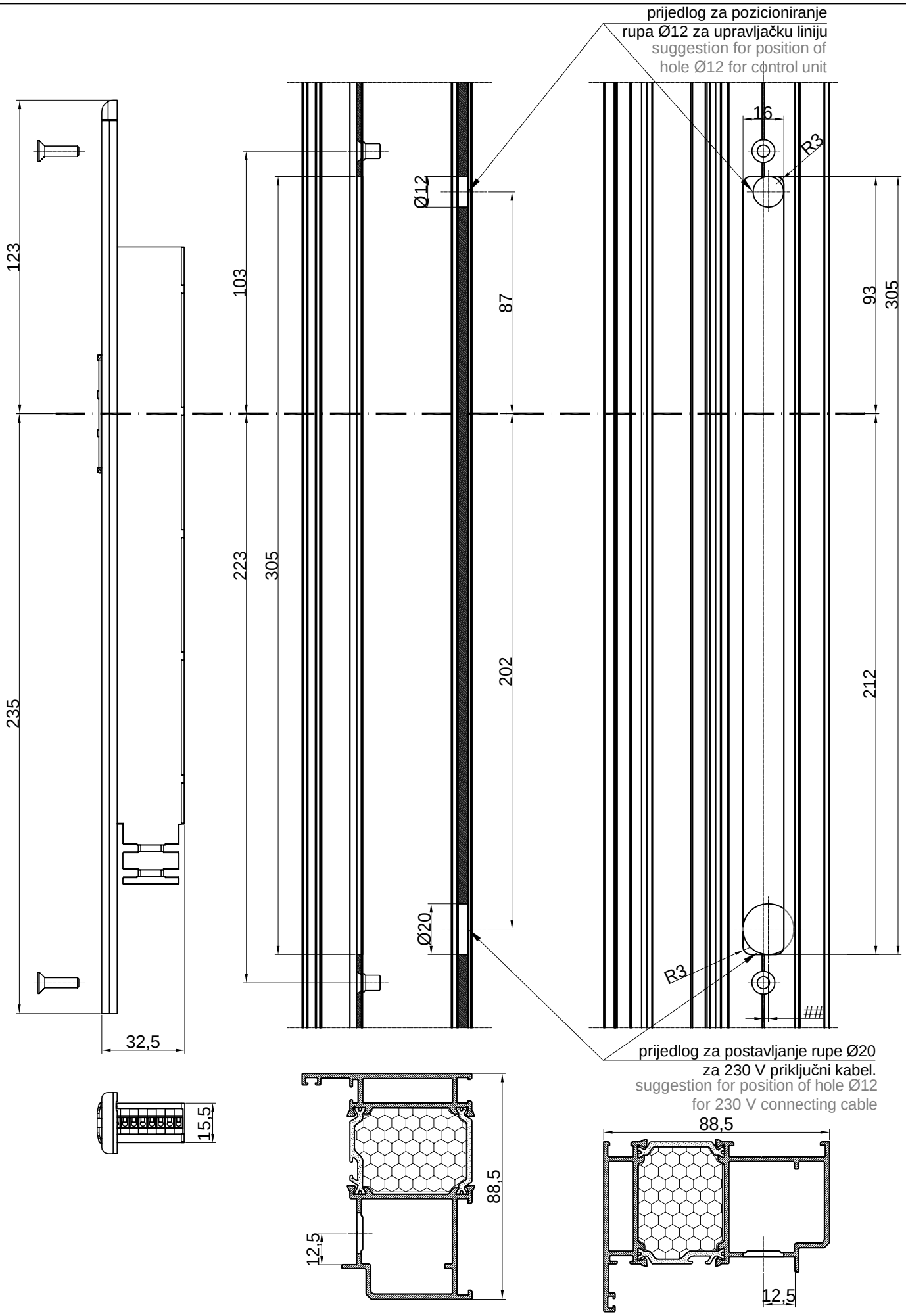
** max. obrtna sila =1Nm
** max. torque =1Nm

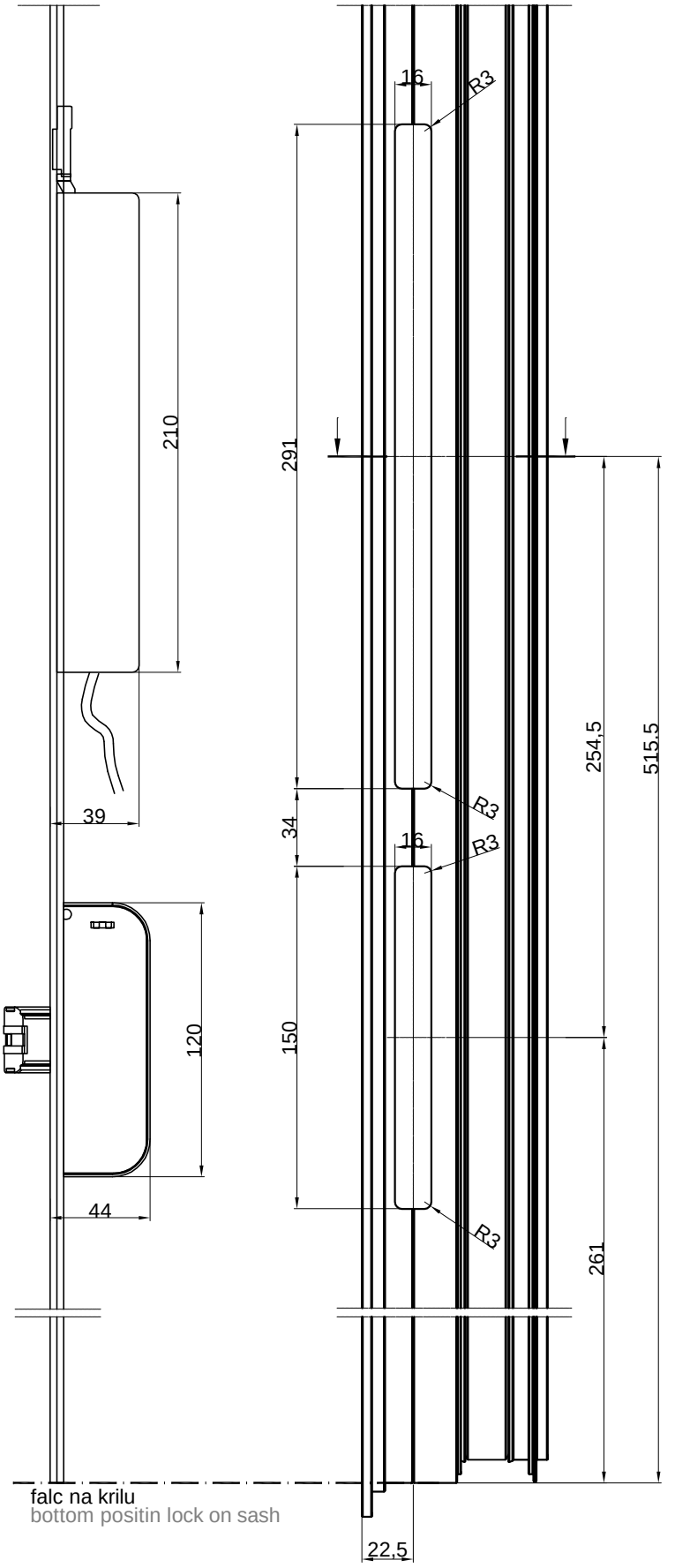


obrada na ramu, prečki za SECURE CONNECT 200
processing on frame, transom for SECURE CONNECT 200

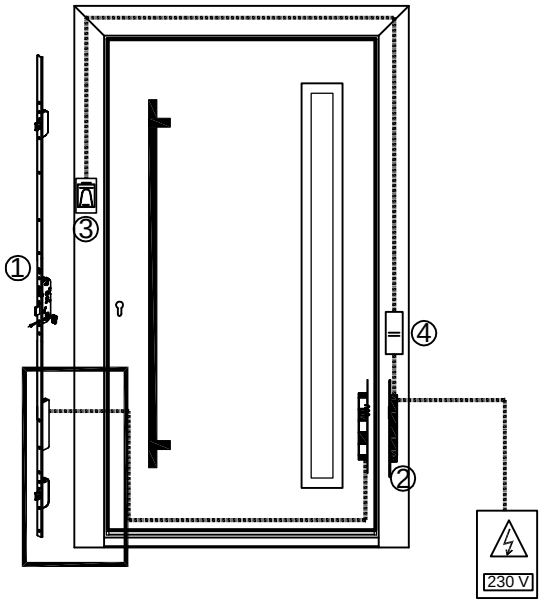
X=22.5 mm za krila FT-0591F, FT-0592F i FT-0593F
X=22.5 mm for sash FT-0591F, FT-0592F i FT-0593F
Y=12.5 mm za ramove FT-0551F; FT-0555+F-1222; FT-0557F+F-1222; FT-0556F
Y=12.5 mm za ramove FT-0551F; FT-0555+F-1222; FT-0557F+F-1222; FT-0556F

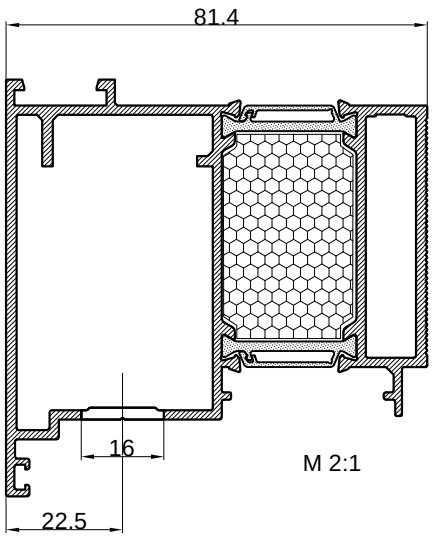

16
R3
R3
305
93
305
103
115
223
235
34,5
22,5


prijedlog za pozicioniranje
rupa Ø12 za upravljačku liniju
suggestion for position of
hole Ø12 for control unit
123
103
87
93
305
Ø12
16
R3
223
305
202
212
235
Ø20
R3
##
32,5
prijedlog za postavljanje rupe Ø20
za 230 V priključni kabel.
suggestion for position of hole Ø12
for 230 V connecting cable
15,5
88,5
12,5
88,5
12,5

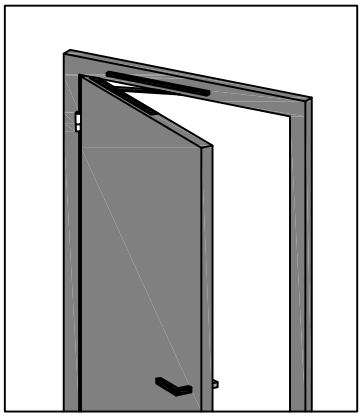


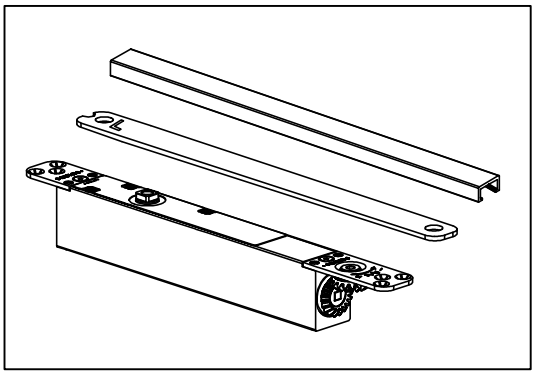
falc na krilu
bottom positin lock on sash



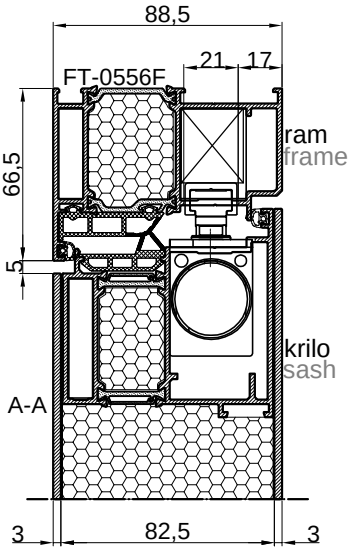


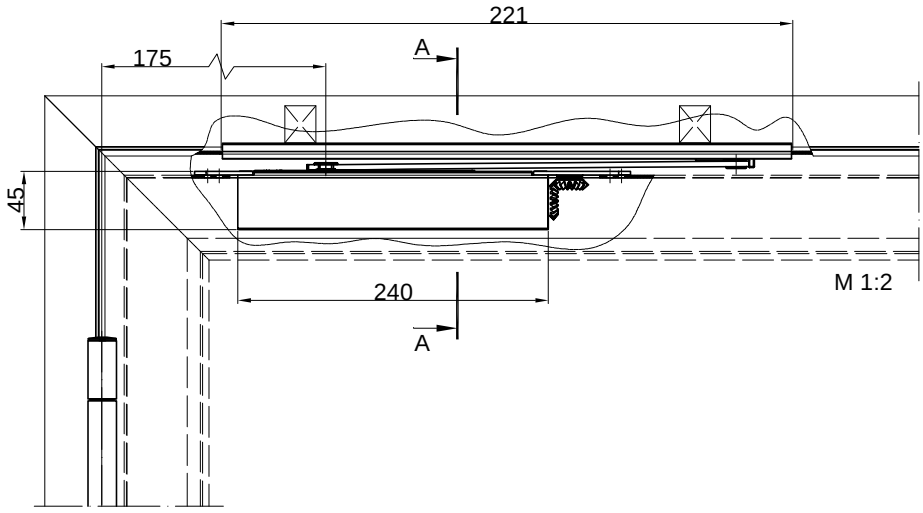
M 2:1



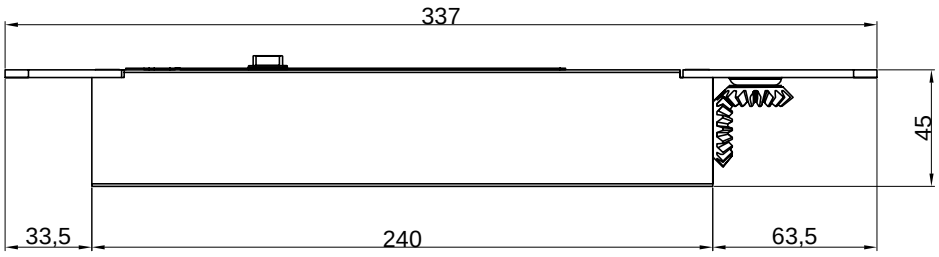


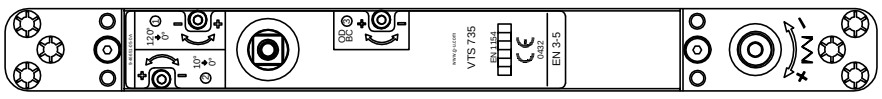
Skriveni zatvarač
G-U VTS 735+GS VTS 73x20x12
Concealed door closer
G-U VTS 735+GS VTS 73x20x12
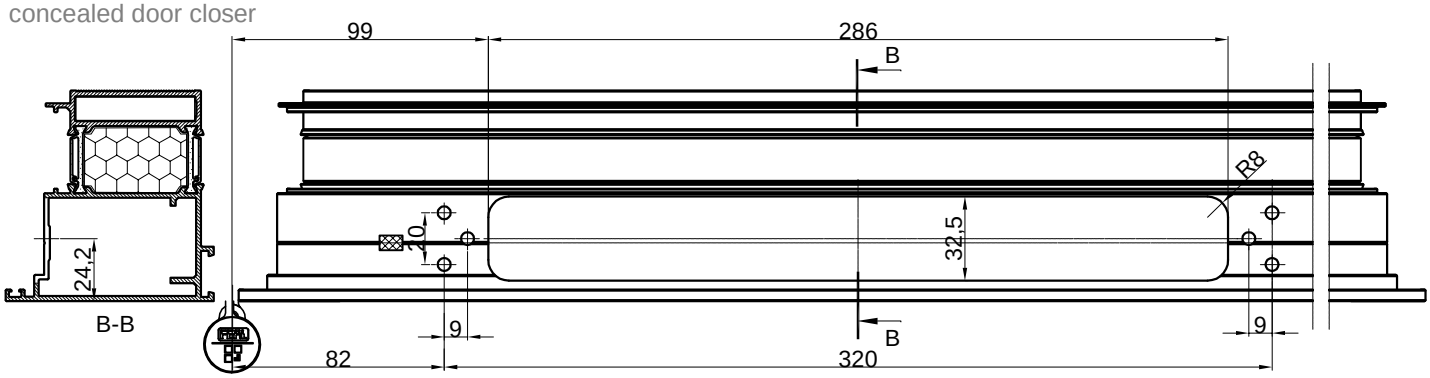




Skriveni zatvarač
G-U VTS 735+GS VTS 73x20x12
Concealed door closer
G-U VTS 735+GS VTS 73x20x12

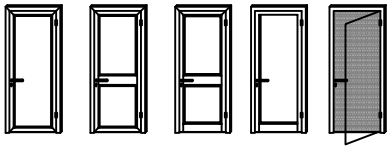




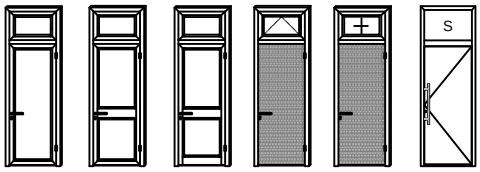
Obrada krila za ugradnju skrivenog zatvarača
Processing on sash for montage concealed door closer



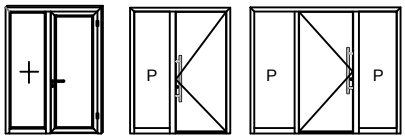
Rezne liste
Cutting lists



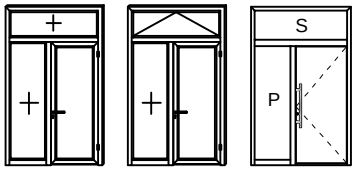
Jednokrilna vrata
Single-leaf door



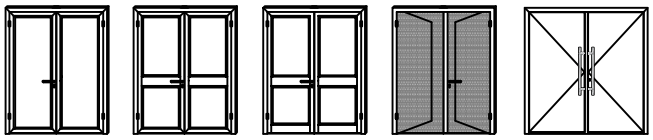
Jednokrilna vrata s nadsvjetlom
Single-leaf door with top light



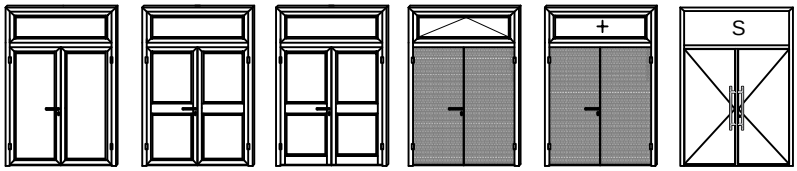
Jednokrilna vrata s bočnim fiksnim poljem
Single-leaf door with side fixed field



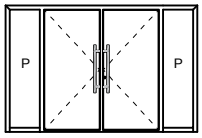
Jednokrilna vrata s bočnim fiksnim poljem i nadsvjetlom
Single-leaf door with side fixed field and top light



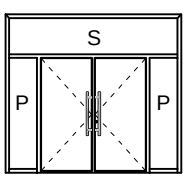
Dvokrilna vrata
Double-leaf door



Dvokrilna vrata s nadsvjetlom
Double-leaf door with top light

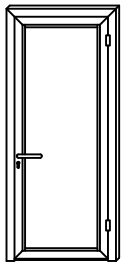


Dvokrilna vrata s bočnim fiksnim poljem
Double-leaf door with side fixed field

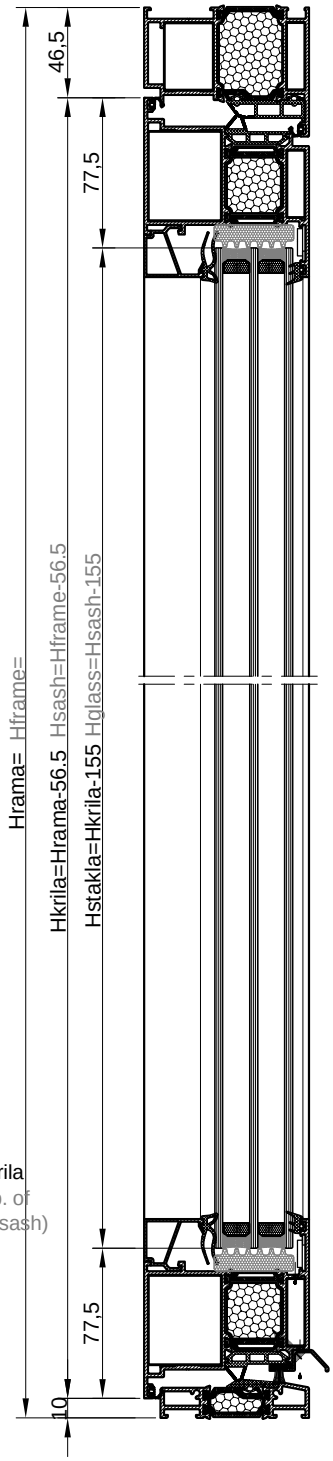


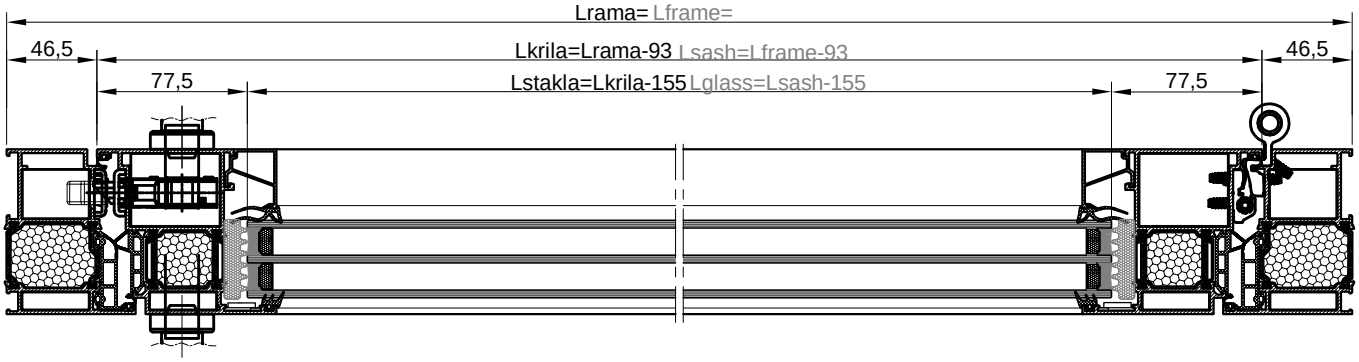
Dvokrilna vrata s bočnim fiksnim poljem i nadsvjetlom
Double-leaf door with side fixed field and top light

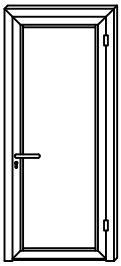
Jednokrilna vrata
Single-leaf door



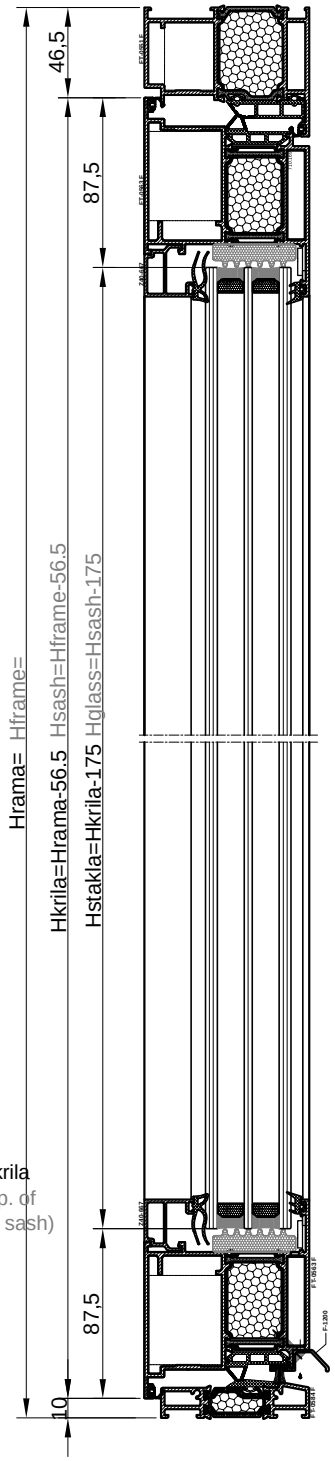
naziv name		mjera dimension	kom. pcs.	pilanje sawing angle
Ram FT-0551F	Frame FT-0551F	L	1	45-45
Ram FT-0551F	Frame FT-0551F	H	2	45-90
Krilo FT-0561F	Sash FT-0561F	L-93	2	45-45
Krilo FT-0561F	Sash FT-0561F	H-56.5	2	45-45
Prag FT-0584F	Threshold FT-0584F	L-164	1	90-90
Okapnica F-1200	Drip cap profile F-1200	Lkr - 54	1	90-90
Staklo lajsna Z40-668	Glazing bead Z40-668	Lkr-141	2	90-90
Staklo lajsna Z40-668	Glazing bead Z40-668	Hkr-185	2	90-90
Kutna spojnica 710.143	Corner bracket 710.143		2	
Kutna spojnica 710.141	Corner bracket 710.141		6	
Kutna spojnica 710.136	Corner bracket 710.136		4	
Kutna spojnica 731.010	Corner bracket 731.010		4	
Kutna spojnica 730.001	Corner bracket 730.001		10	
Centralna brtva rama 334.005	Central gasket-frame 334.005	1L+2H		
Centralna brtva krila 334.006	Central gasket-sash 334.006	2Lkr+2Hkr		
Brtva na spoju rama i krila 321.006	Rebate gasket 321.006	3Lkr+4Hkr		
Brtva prema staklu vanjska 321.003	Glazing gasket -external- 321.003	2Lkr+2Hkr		
Brtva prema staklu unutarnja 311.004	Glazing gasket -internal- 311.004	2Lkr+2Hkr		
Brtva praga 331.013	Threshold gasket 331.013	L-164	1	90-90
Četkica 7x9 347.003	Brush seal 7x9 347.003	Lkr-35	2	90-90
Izolacijski umetak ispod stak.340.013	Underglass insulator 340.013	2(Lkr.-131)+2(Hkr.-155)		
Čep okapnice F-1200 373.027	End cap for F-1200 373.027		1 par	
Umetak na pragu 373.019	End cap for threshold 373.019		1 par	
Brava G-U Secury MR2 (35) tri ključanja 122.016	Multipoint lock - G-U Secury MR2 (35) - 122.016		1	
Prihvatna pločica 24x6x2 122.028	Striking plate 24x6x2 122.028		2	
Prihvatni lim 24x6 (lijevi) 122.081	Striking plate 24x6 (left) 122.081		1	
Trodijelna cilindrična šarka 112.011.01 - bijela	Barrel door hinge-3 part 112.011.01 - white		2 ili (3) po krilu ovisno o visini i tež.krila 2 or (3) per sash(dep. of height and weight of sash)	
Ručka za vrata 102.028	Door handle 102.028		2	
Četvrtka 102.025	Square spindle 102.025		1	
Cilindar (35-75) 122.095	Cylinder (35-75) 122.095		1	
Štitnik cilindra 122.098	Cylinder rosette 122.098		2	
Protuprovalni umetak 141.002	Security pin 141.002		2	
Vijak 433.094	Screw 433.094		3	
Staklo 40 mm	Glass 40 mm	(Lkr.-155)x(Hkr.-155)	1	



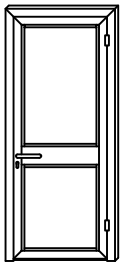




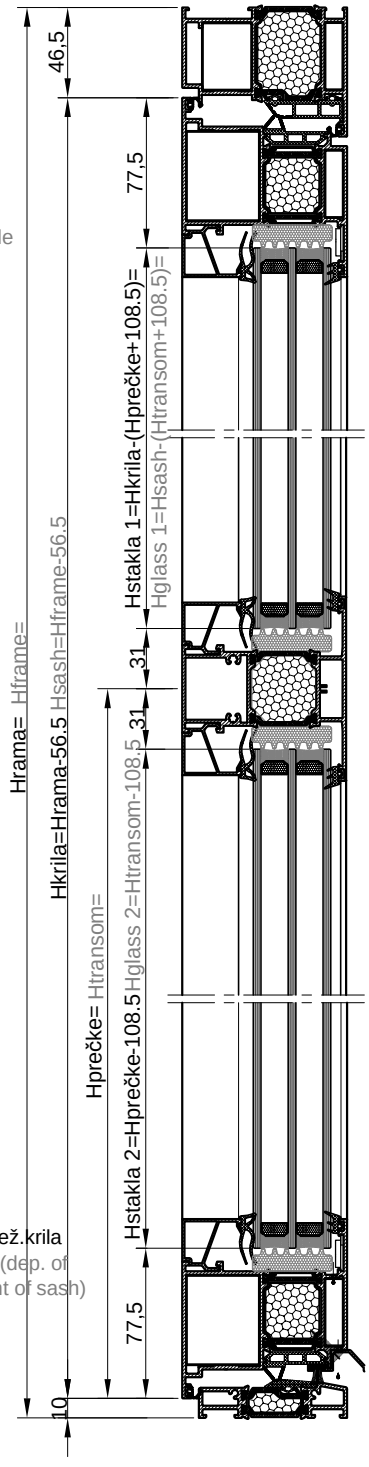
naziv name		mjera dimension	kom. pcs.	pilanje sawing angle
Ram FT-0551F	Frame FT-0551F	L	1	45-45
Ram FT-0551F	Frame FT-0551F	H	2	45-90
Krilo FT-0563F	Sash FT-0563F	L-93	2	45-45
Krilo FT-0563F	Sash FT-0563F	H-56.5	2	45-45
Prag FT-0584F	Threshold FT-0584F	L-164	1	90-90
Okapnica F-1200	Drip cap profile F-1200	Lkr - 54	1	90-90
Staklo lajsna Z40-667	Glazing bead Z40-667	Lkr-161	2	90-90
Staklo lajsna Z40-667	Glazing bead Z40-667	Hkr-205	2	90-90
Kutna spojnica 710.143	Corner bracket 710.143		2	
Kutna spojnica 710.141	Corner bracket 710.141		2	
Kutna spojnica 710.136	Corner bracket 710.136		4	
Kutna spojnica 710.169	Corner bracket 710.169		4	
Kutna spojnica 731.010	Corner bracket 731.010		4	
Kutna spojnica 730.001	Corner bracket 730.001		6	
Centralna brtva rama 334.005	Central gasket-frame 334.005	1L+2H		
Centralna brtva krila 334.006	Central gasket-sash 334.006	2Lkr+2Hkr		
Brtva na spoju rama i krila 321.006	Rebate gasket 321.006	3Lkr+4Hkr		
Brtva prema staklu vanjska 321.003	Glazing gasket -external- 321.003	2Lkr+2Hkr		
Brtva prema staklu unutarnja 311.004	Glazing gasket -internal- 311.004	2Lkr+2Hkr		
Brtva praga 331.013	Threshold gasket 331.013	L-164	1	90-90
Četkica 7x9 347.003	Brush seal 7x9 347.003	Lkr-35	2	90-90
Izolacijski umetak 340.013	Underglass insulator 340.013	2(Lkr.-151)+2(Hkr.-175)		
Čep okapnice F-1200 373.027	End cap for F-1200 373.027		1 par	
Umetak na pragu 373.019	End cap for threshold 373.019		1 par	
Brava G-U Secury MR2 (45) tri ključanja 122.015	Multipoint lock - G-U Secury MR2 (45) -122.015		1	
Prihvatna pločica 24x6x2 122.028	Striking plate 24x6x2 122.028		2	
Prihvatni lim 24x6 (lijevi) 122.081	Striking plate 24x6 (left) 122.081		1	
Trodijelna cilindrična šarka 112.011.01 - bijela	Barrel door hinge-3 part 112.011.01 - white		2 ili (3) po krilu ovisno o visini i tež.krila 2 or (3) per sash(dep. of height and weight of sash)	
Ručka za vrata 102.028	Door handle 102.028		2	
Četvrtka 102.025	Square spindle 102.025		1	
Cilindar (35-75) 122.095	Cylinder (35-75) 122.095		1	
Štitnik cilindra 122.098	Cylinder rosette 122.098		2	
Protuprovalni umetak 141.002	Security pin 141.002		2	
Vijak 433.094	Screw 433.094		3	
Staklo 44 mm	Glass 44 mm	(Lkr.-175)x(Hkr.-175)	1	

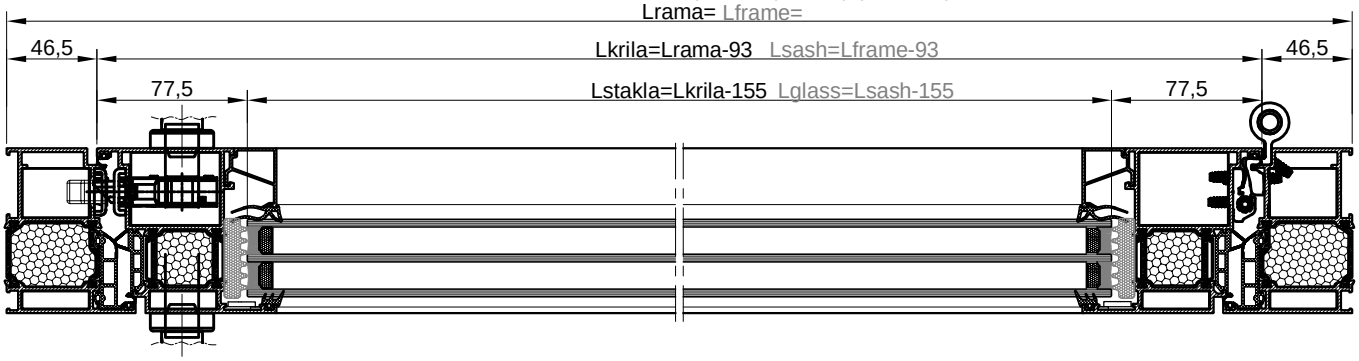


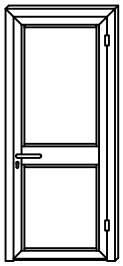




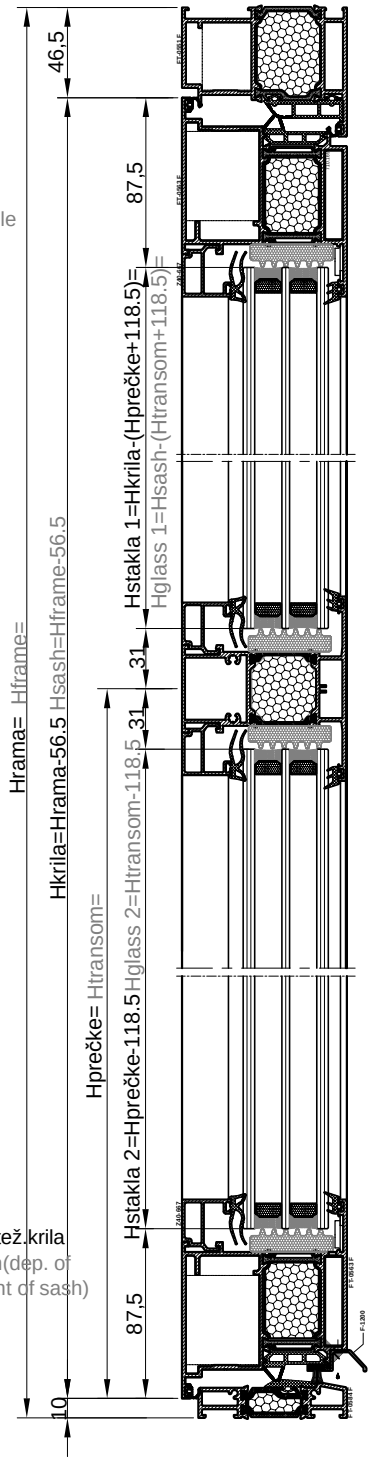
naziv name		mjera dimension	kom. pcs.	pilanje sawing angle
Ram FT-0551F	Frame FT-0551F	L	1	45-45
Ram FT-0551F	Frame FT-0551F	H	2	45-90
Krilo FT-0561F	Sash FT-0561F	L-93	2	45-45
Krilo FT-0561F	Sash FT-0561F	H-56.5	2	45-45
Prag FT-0584F	Threshold FT-0584F	L-164	1	90-90
Okapnica F-1200	Drip cap profile F-1200	Lkr-54	1	90-90
Staklo lajsna Z40-668	Glazing bead Z40-668	Lkr-141	4	90-90
Staklo lajsna Z40-668	Glazing bead Z40-668	Hpr.-137	2	90-90
Staklo lajsna Z40-668	Glazing bead Z40-668	H-(Hpr.+193.5)	2	90-90
Prečka FT-0575F	Transom FT-0575F	Lkr-128	1	90-90
Kutna spojnica 710.143	Corner bracket 710.143		2	
Kutna spojnica 710.141	Corner bracket 710.141		6	
Kutna spojnica 710.136	Corner bracket 710.136		4	
Kutna spojnica 731.010	Corner bracket 731.010		4	
Kutna spojnica 730.001	Corner bracket 730.001		10	
Veznik prečke 710.066	T bracket 710.066		4	
Veznik prečke 710.171	T bracket 710.171		4	
Centralna brtva rama 334.005	Central gasket-frame 334.005	1L + 2H		
Centralna brtva krila 334.006	Central gasket-sash 334.006	2Lkr+2Hkr		
Brtva na spoju rama i krila 321.006	Rebate gasket 321.006	3Lkr+4Hkr		
Brtva prema staklu vanjska 321.003	Glazing gasket -external- 321.003	4Lkr+2Hkr		
Brtva prema staklu unutarnja 311.004	Glazing gasket -internal- 311.004	4Lkr+2Hkr		
Brtva praga 331.013	Threshold gasket 331.013	L-164	1	90-90
Četkica 7x9 347.003	Brush seal 7x9 347.003	Lkr-35	1	90-90
Izolacijski umetak 340.013	Underglass insulator 340.013	4(Lkr-131)+2(Hpr.-108.5)+ 2/Hkr.-(Hpr.+108.5)		
Čep okapnice F-1200 373.027	End cap for F-1200 373.027		1 par	
Umetak na pragu 373.019	End cap for threshold 373.019		1 par	
Brava G-U Secury s MR2 (35) tri ključanja 122.016	Multipoint lock - G-U Secury MR2 (35) -122.016		1	
Prihvatna pločica 24x6x2 122.028	Striking plate 24x6x2 122.028		2	
Prihvatni lim 24x6 (lijevi) 122.081	Striking plate 24x6 (left) 122.081		1	
Trodijelna cilindrična šarka 112.011.01 - bijela	Barrel door hinge-3 part 112.011.01 - white		2 ili (3) po krilu ovisno o visini i tež.krila 2 or (3) per sash(dep. of height and weight of sash)	
Ručka za vrata 102.028	Door handle 102.028		2	
Četvrtka 102.025	Square spindle 102.025		1	
Cilindar (35-75) 122.095	Cylinder (35-75) 122.095		1	
Štitnik cilindra 122.098	Cylinder rosette 122.098		2	
Protuprovalni umetak 141.002	Security pin 141.002		2	
Vijak 433.094	Screw 433.094		3	
Staklo 40 mm	Glass 40 mm	(Lkr.-155)x(Hpr.-108.5)	1	
Staklo 40 mm	Glass 40 mm	(Lkr.-155)x/Hkr-(Hpr.+108.5)/	1	
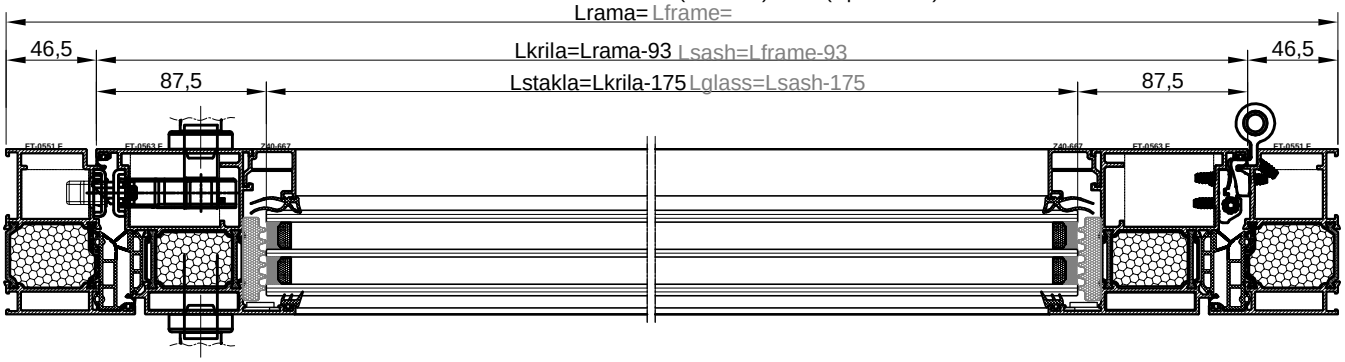


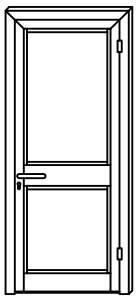




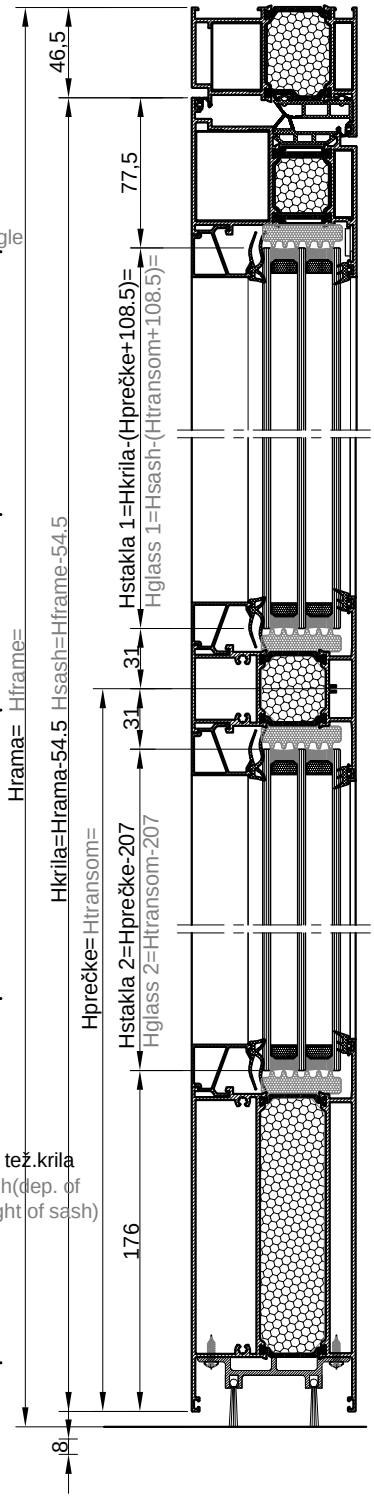
naziv name		mjera dimension	kom. pcs.	pilanje sawing angle
Ram FT-0551F	Frame FT-0551F	L	1	45-45
Ram FT-0551F	Frame FT-0551F	H	2	45-90
Krilo FT-0563F	Sash FT-0563F	L-93	2	45-45
Krilo FT-0563F	Sash FT-0563F	H-56.5	2	45-45
Prag FT-0584F	Threshold FT-0584F	L-164	1	90-90
Okapnica F-1200	Drip cap profile F-1200	Lkr-54	1	90-90
Staklo lajsna Z40-667	Glazing bead Z40-667	Lkr-161	4	90-90
Staklo lajsna Z40-667	Glazing bead Z40-667	Hpr.-147	2	90-90
Staklo lajsna Z40-667	Glazing bead Z40-667	H-(Hpr.+203.5)	2	90-90
Prečka FT-0575F	Transom FT-0575F	Lkr-151	1	90-90
Kutna spojnica 710.143	Corner bracket 710.143		2	
Kutna spojnica 710.141	Corner bracket 710.141		2	
Kutna spojnica 710.136	Corner bracket 710.136		4	
Kutna spojnica 710.169	Corner bracket 710.169		4	
Kutna spojnica 731.010	Corner bracket 731.010		4	
Kutna spojnica 730.001	Corner bracket 730.001		6	
Veznik prečke 710.066	T bracket 710.066		4	
Veznik prečke 710.171	T bracket 710.171		4	
Centralna brtva rama 334.005	Central gasket-frame 334.005	1L + 2H		
Centralna brtva krila 334.006	Central gasket-sash 334.006	2Lkr+2Hkr		
Brtva na spoju rama i krila 321.006	Rebate gasket 321.006	3Lkr+4Hkr		
Brtva prema staklu vanjska 321.003	Glazing gasket -external- 321.003	4Lkr+2Hkr		
Brtva prema staklu unutarnja 311.004	Glazing gasket -internal- 311.004	4Lkr+2Hkr		
Brtva praga 331.013	Threshold gasket 331.013	L-164	1	90-90
Četkica 7x9 347.003	Brush seal 7x9 347.003	Lkr-35	1	90-90
Izolacijski umetak 340.013	Underglass insulator 340.013	4(Lkr-151)+2(Hpr.-118.5)+ 2/Hkr.-(Hpr.+118.5)		
Čep okapnice F-1200 373.027	End cap for F-1200 373.027		1 par	
Umetak na pragu 373.019	End cap for threshold 373.019		1 par	
Brava G-U Secury s MR2 (45) tri ključanja 122.015	Multipoint lock - G-U Secury MR2 (45) -122.015		1	
Prihvatna pločica 24x6x2 122.028	Striking plate 24x6x2 122.028		2	
Prihvatni lim 24x6 (lijevi) 122.081	Striking plate 24x6 (left) 122.081		1	
Trodijelna cilindrična šarka 112.011.01 - bijela	Barrel door hinge-3 part 112.011.01 - white		2 ili (3) po krilu ovisno o visini i tež.krila 2 or (3) per sash(dep. of height and weight of sash)	
Ručka za vrata 102.028	Door handle 102.028		2	
Četvrtka 102.025	Square spindle 102.025		1	
Cilindar (35-75) 122.095	Cylinder (35-75) 122.095		1	
Štitnik cilindra 122.098	Cylinder rosette 122.098		2	
Protuprovalni umetak 141.002	Security pin 141.002		2	
Vijak 433.094	Screw 433.094		3	
Staklo 44 mm	Glass 44 mm	(Lkr.-175)x(Hpr.-118.5)	1	
Staklo 44 mm	Glass 44 mm	(Lkr.-175)x/Hkr-(Hpr.+118.5)/	1	

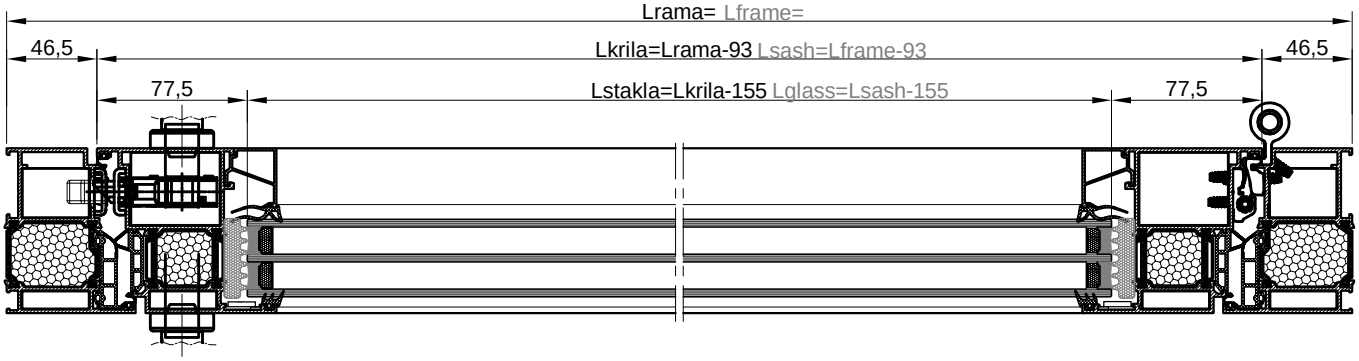


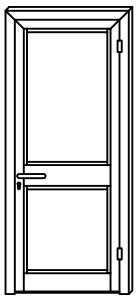




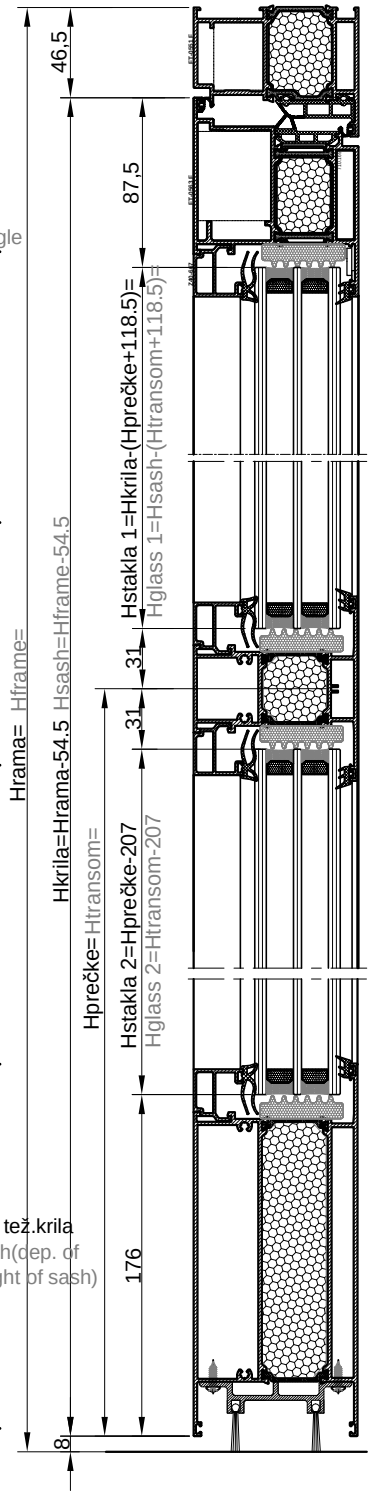
naziv name		mjera dimension	kom. pcs.	pilanje sawing angle
Ram FT-0551F	Frame FT-0551F	L	1	45-45
Ram FT-0551F	Frame FT-0551F	H	2	45-90
Krilo FT-0561F	Sash FT-0561F	L-93	1	45-45
Krilo FT-0561F	Sash FT-0561F	H-54.5	2	45-90
Staklo lajsna Z40-668	Glazing bead Z40-668	Lkr-141	4	90-90
Staklo lajsna Z40-668	Glazing bead Z40-668	Hpr.-233.5	2	90-90
Staklo lajsna Z40-668	Glazing bead Z40-668	H-(Hpr.+191.5)	2	90-90
Prečka FT-0575F	Transom FT-0575F	Lkr-128	1	90-90
Parapetna prečka FT-0576F	Transom-bott. sash profile FT-0576F	Lkr-128	1	90-90
Kutna spojnica 710.143	Corner bracket 710.143		2	
Kutna spojnica 710.141	Corner bracket 710.141		4	
Kutna spojnica 710.136	Corner bracket 710.136		2	
Kutna spojnica 731.010	Corner bracket 731.010		2	
Kutna spojnica 730.001	Corner bracket 730.001		6	
Veznik prečke 710.066	T bracket 710.066		8	
Veznik prečke 710.171	T bracket 710.171		8	
Centralna brtva rama 334.005	Central gasket-frame 334.005	1L+2H		
Centralna brtva krila 334.006	Central gasket-sash 334.006	1Lkr+2Hkr		
Brtva na spoju rama i krila 321.006	Rebate gasket 321.006	2Lkr+4Hkr		
Brtva prema staklu vanjska 321.003	Glazing gasket -external- 321.003	4Lkr+2Hkr		
Brtva prema staklu unutarnja 311.004	Glazing gasket -internal- 311.004	4Lkr+2Hkr		
Izolacijski umetak 340.013	Underglass insulator 340.013	4(Lkr-131)+2(Hpr.-207) +2/Hkr.-(Hpr.+108.5)		
Pvc umetak u parap. prečki 374.048	Pvc profile for transom /bottom sash profile/ 374.048	Lkr-33	1	
Četkasta brtva 347.001	Brush seal 347.001		2	
Brava G-U Secury s MR2 (35) tri ključanja 122.016	Multipoint lock - G-U Secury MR2 (35) - 122.016		1	
Prihvatna pločica 24x6x2 122.028	Striking plate 24x6x2 122.028		2	
Prihvatni lim 24x6 (lijevi) 122.081	Striking plate 24x6 (left) 122.081		1	
Trodijelna cilindrična šarka 112.011.01 - bijela	Barrel door hinge-3 part 112.011.01 - white		2 ili (3) po krilu ovisno o visini i tež.krila 2 or (3) per sash(dep. of height and weight of sash)	
Ručka za vrata 102.028	Door handle 102.028		2	
Četvrtka 102.025	Square spindle 102.025		1	
Cilindar (35-75) 122.095	Cylinder (35-75) 122.095		1	
Štitnik cilindra 122.098	Cylinder rosette 122.098		2	
Protuprovalni umetak 141.002	Security pin 141.002		2	
Staklo 40 mm	Glass 40 mm	(Lkr.-155)x(Hpr.-207)	1	
Staklo 40 mm	Glass 40 mm	(Lkr.-155)x/Hkr-(Hpr.+108.5)/	1	



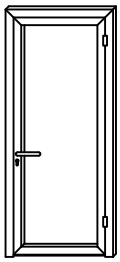




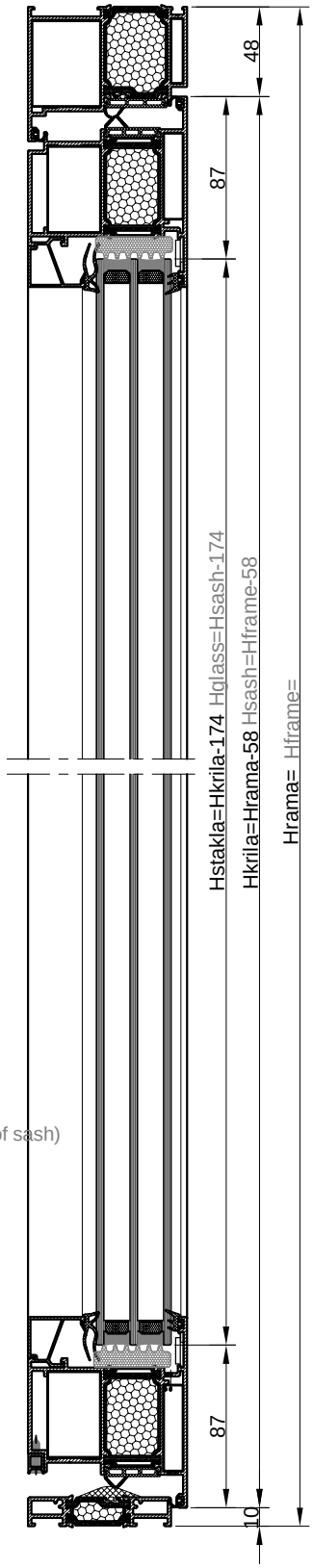
naziv name		mjera dimension	kom. pcs.	pilanje sawing angle
Ram FT-0551F	Frame FT-0551F	L	1	45-45
Ram FT-0551F	Frame FT-0551F	H	2	45-90
Krilo FT-0563F	Sash FT-0563F	L-93	1	45-45
Krilo FT-0563F	Sash FT-0563F	H-54.5	2	45-90
Staklo lajsna Z40-667	Glazing bead Z40-667	Lkr-161	4	90-90
Staklo lajsna Z40-667	Glazing bead Z40-667	Hpr.-233.5	2	90-90
Staklo lajsna Z40-667	Glazing bead Z40-667	H-(Hpr.+201.5)	2	90-90
Prečka FT-0575F	Transom FT-0575F	Lkr-151	1	90-90
Parapetna prečka FT-0576F	Transom-bottom sash profile FT-0576F	Lkr-151	1	90-90
Kutna spojnica 710.143	Corner bracket 710.143		2	
Kutna spojnica 710.141	Corner bracket 710.141		2	
Kutna spojnica 710.136	Corner bracket 710.136		2	
Kutna spojnica 710.169	Corner bracket 710.169		2	
Kutna spojnica 731.010	Corner bracket 731.010		2	
Kutna spojnica 730.001	Corner bracket 730.001		4	
Veznik prečke 710.066	T bracket 710.066		8	
Veznik prečke 710.171	T bracket 710.171		8	
Centralna brtva rama 334.005	Central gasket-frame 334.005	1L+2H		
Centralna brtva krila 334.006	Central gasket-sash 334.006	1Lkr+2Hkr		
Brtva na spoju rama i krila 321.006	Rebate gasket 321.006	2Lkr+4Hkr		
Brtva prema staklu vanjska 321.003	Glazing gasket -external- 321.003	4Lkr+2Hkr		
Brtva prema staklu unut. 311.004	Glazing gasket -internal- 311.004	4Lkr+2Hkr		
Izolacijski umetak 340.013	Underglass insulator 340.013	4(Lkr-151)+2(Hpr.-207) +2/Hkr.-(Hpr.+118.5)		
Pvc umetak u parap. prečki 374.048	Pvc profile for transom /bottom sash profile/ 374.048	Lkr-33	1	
Četkasta brtva 347.001	Brush seal 347.001		2	
Brava G-U Secury s MR2 (45) tri ključanja 122.015	Multipoint lock - G-U Secury MR2 (45) -122.015		1	
Prihvatna pločica 24x6x2 122.028	Striking plate 24x6x2 122.028		2	
Prihvatni lim 24x6 (lijevi) 122.081	Striking plate 24x6 (left) 122.081		1	
Trodijelna cilindrična šarka 112.011.01 - bijela	Barrel door hinge-3 part 112.011.01 - white		2 ili (3) po krilu ovisno o visini i tež.krila 2 or (3) per sash(dep. of height and weight of sash)	
Ručka za vrata 102.028	Door handle 102.028		2	
Četvrtka 102.025	Square spindle 102.025		1	
Cilindar (35-75) 122.095	Cylinder (35-75) 122.095		1	
Štitnik cilindra 122.098	Cylinder rosette 122.098		2	
Protuprovalni umetak 141.002	Security pin 141.002		2	
Staklo 44 mm	Glass 44 mm	(Lkr.-175)x(Hpr.-207)	1	
Staklo 44 mm	Glass 44 mm	(Lkr.-175)x/Hkr-(Hpr.+118.5)/	1	

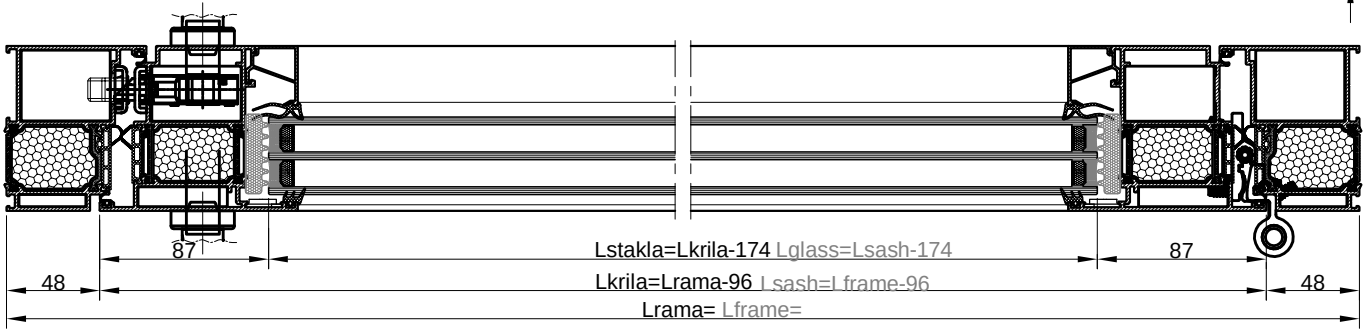


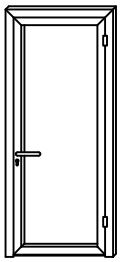




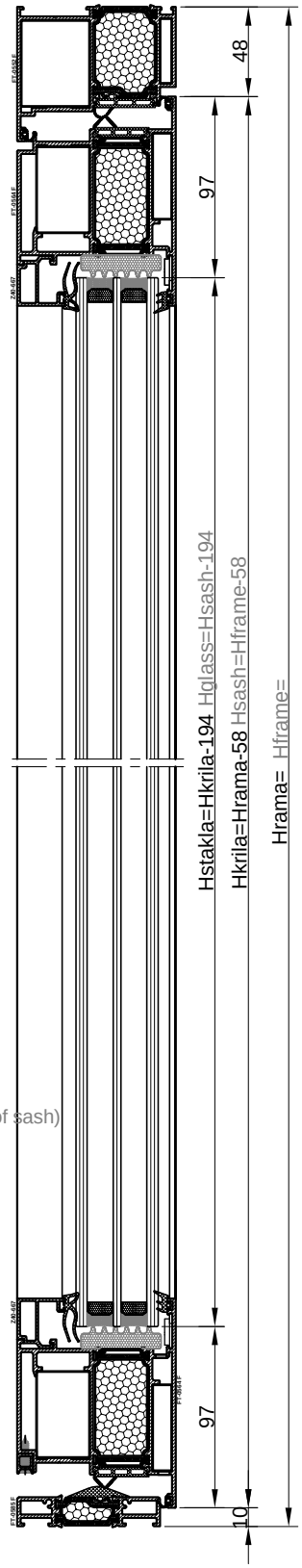
naziv name		mjera dimension	kom. pcs.	pilanje sawing angle
Ram FT-0552F	Frame FT-0552F	L	1	45-45
Ram FT-0552F	Frame FT-0552F	H	2	45-90
Krilo FT-0562F	Sash FT-0562F	L-96	2	45-45
Krilo FT-0562F	Sash FT-0562F	H-58	2	45-45
Prag FT-0585F	Threshold FT-0585F	L-154	1	90-90
Umetak F-1188	Additional profile F-1188	Lkr-58	1	90-90
Staklo lajsna Z40-668	Glazing bead Z40-668	Lkr-160	2	90-90
Staklo lajsna Z40-668	Glazing bead Z40-668	Hkr-204	2	90-90
Kutna spojnica 710.131	Corner bracket 710.131		2	
Kutna spojnica 710.133	Corner bracket 710.133		4	
Kutna spojnica 710.140	Corner bracket 710.140		2	
Kutna spojnica 710.134	Corner bracket 710.134		4	
Kutna spojnica 731.010	Corner bracket 731.010		4	
Kutna spojnica 730.001	Corner bracket 730.001		10	
Centralna brtva rama 334.009	Central gasket-frame 334.009	1L+2H		
Centralna brtva krila 334.010	Central gasket-sash 334.010	2Lkr+2Hkr		
Centralna brtva praga 331.012	Threshold gasket 331.012	L-154	1	90-90
Brtva prema staklu vanjska 321.003	Glazing gasket -external- 321.003	2Lkr+2Hkr		
Brtva prema staklu unutarnja 311.004	Glazing gasket -internal- 311.004	2Lkr+2Hkr		
Brtva na spoju rama i krila 321.006	Rebate gasket 321.006	(1Lrama+2Hrama)+(2Lkr+2Hkr)		
Izolacijski umetak 340.013	Underglass insulator 340.013	2(Lkr-150)+2(Hkr-174)		
Umetak na pragu 373.020	End cap for threshold 373.020	1 par		
Brava G-U Secury s MR2 (35) tri ključanja 122.016	Multipoint lock - G-U Secury MR2 (35) -122.016		1	
Prihvatna pločica 24x6x2 122.028	Striking plate 24x6x2 122.028		2	
Prihvatni lim 24x6 (desni) 122.029	Striking plate 24x6 (right) 122.029		1	
Trodijelna cilindrična šarka 112.012.01 - bijela	Barrel door hinge-3 part 112.012.01 - white	2 ili (3) po krilu ovisno o visini i tež.krila 2 or (3) per sash(dep. of height and weight of sash)		
Ručka za vrata 102.028	Door handle 102.028		2	
Četvrtka 102.025	Square spindle 102.025		1	
Cilindar (35-75) 122.095	Cylinder (35-75) 122.095		1	
Štitnik cilindra 122.098	Cylinder rosette 122.098		2	
Protuprovalni umetak 141.002	Security pin 141.002		2	
Vijak 433.093	Screw 433.093		3	
Staklo 40 mm	Glass 40 mm	(Lkr.-174)x(Hkr.-174)	1	

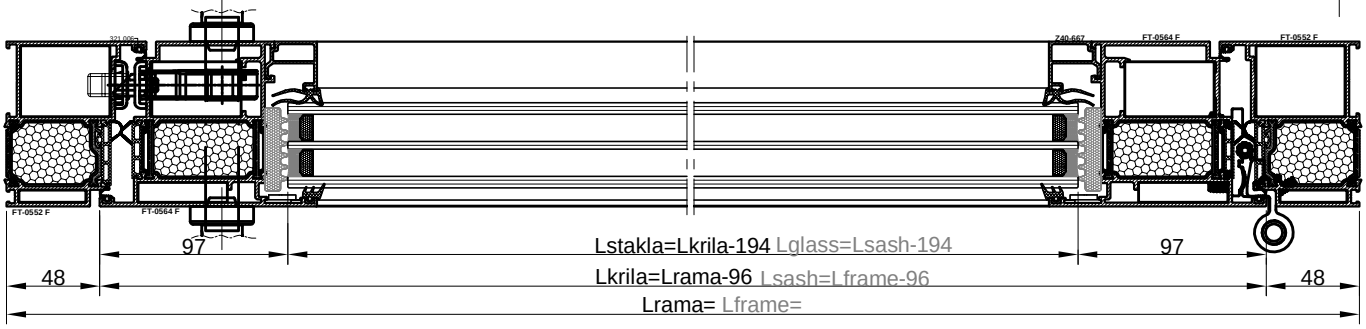


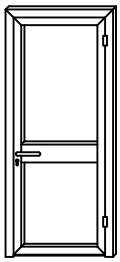




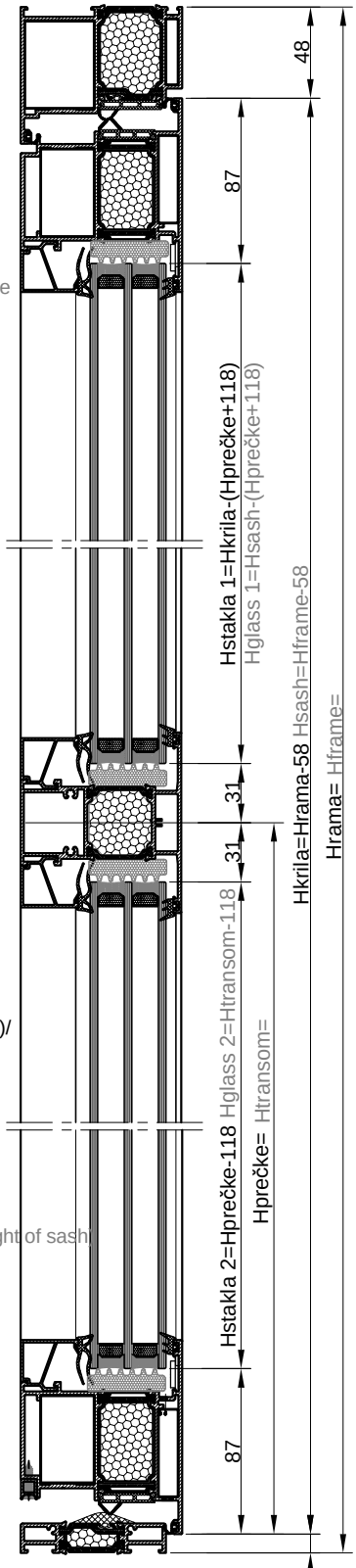
naziv name		mjera dimension	kom. pcs.	pilanje sawing angle
Ram FT-0552F	Frame FT-0552F	L	1	45-45
Ram FT-0552F	Frame FT-0552F	H	2	45-90
Krilo FT-0564F	Sash FT-0564F	L-96	2	45-45
Krilo FT-0564F	Sash FT-0564F	H-58	2	45-45
Prag FT-0585F	Threshold FT-0585F	L-154	1	90-90
Umetak F-1188	Additional profile F-1188	Lkr-58	1	90-90
Staklo lajsna Z40-667	Glazing bead Z40-667	Lkr-180	2	90-90
Staklo lajsna Z40-667	Glazing bead Z40-667	Hkr-224	2	90-90
Kutna spojnica 710.131	Corner bracket 710.131		2	
Kutna spojnica 710.133	Corner bracket 710.133		4	
Kutna spojnica 710.140	Corner bracket 710.140		2	
Kutna spojnica 710.134	Corner bracket 710.134		4	
Kutna spojnica 731.010	Corner bracket 731.010		4	
Kutna spojnica 730.001	Corner bracket 730.001		6	
Centralna brtva rama 334.009	Central gasket-frame 334.009	1L+2H		
Centralna brtva krila 334.010	Central gasket-sash 334.010	2Lkr+2Hkr		
Centralna brtva praga 331.012	Threshold gasket 331.012	L-154	1	90-90
Brtva prema staklu vanjska 321.003	Glazing gasket -external- 321.003	2Lkr+2Hkr		
Brtva prema staklu unutarnja 311.004	Glazing gasket -internal- 311.004	2Lkr+2Hkr		
Brtva na spoju rama i krila 321.006	Rebate gasket 321.006	(1Lrama+2Hrama)+(2Lkr+2Hkr)		
Izolacijski umetak 340.013	Underglass insulator 340.013	2(Lkr-170)+2(Hkr-194)		
Umetak na pragu 373.020	End cap for threshold 373.020	1 par		
Brava G-U Secury s MR2 (45) tri ključanja 122.015	Multipoint lock - G-U Secury MR2 (45) -122.015		1	
Prihvatna pločica 24x6x2 122.028	Striking plate 24x6x2 122.028		2	
Prihvatni lim 24x6 (desni) 122.029	Striking plate 24x6 (right) 122.029		1	
Trodijelna cilindrična šarka 112.012.01 - bijela	Barrel door hinge-3 part 112.012.01 - white	2 ili (3) po krilu ovisno o visini i tež.krila 2 or (3) per sash(dep. of height and weight of sash)		
Ručka za vrata 102.028	Door handle 102.028		2	
Četvrtka 102.025	Square spindle 102.025		1	
Cilindar (35-75) 122.095	Cylinder (35-75) 122.095		1	
Štitnik cilindra 122.098	Cylinder rosette122.098		2	
Protuprovalni umetak 141.002	Security pin 141.002		2	
Vijak 433.093	Screw 433.093		3	
Staklo 44 mm	Glass 44 mm	(Lkr.-194)x(Hkr.-194)	1	

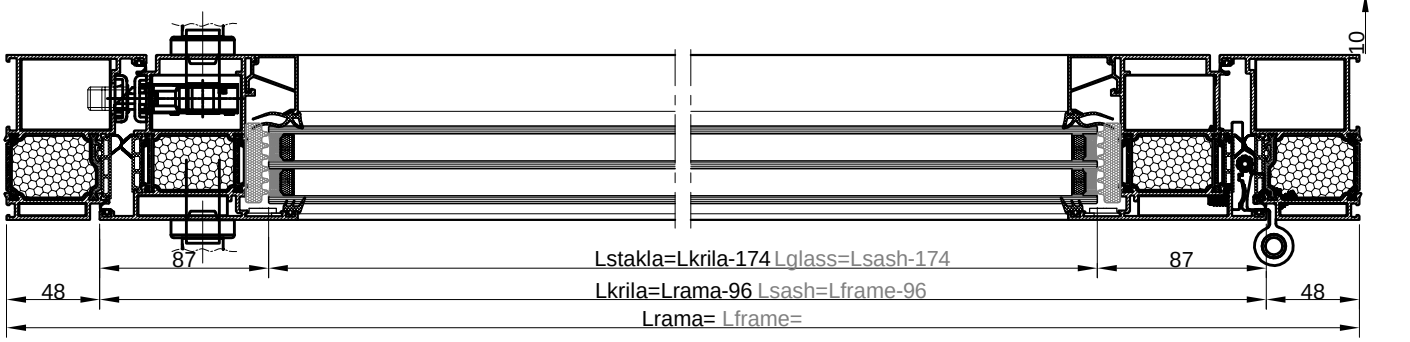


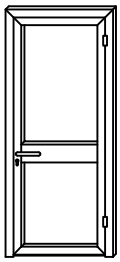




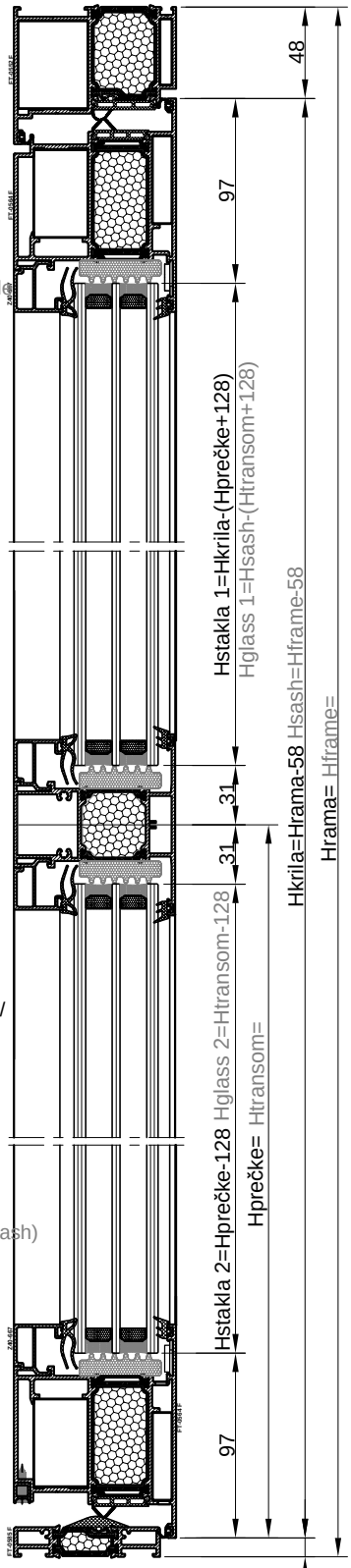
naziv name		mjera dimension	kom. pcs.	pilanje sawing angle
Ram FT-0552F	Frame FT-0552F	L	1	45-45
Ram FT-0552F	Frame FT-0552F	H	2	45-90
Krilo FT-0562F	Sash FT-0562F	L-96	2	45-45
Krilo FT-0562F	Sash FT-0562F	H-58	2	45-45
Prag FT-0585F	Threshold FT-0585F	L-154	1	90-90
Umetak F-1188	Additional profile F-1188	Lkr-58	1	90-90
Staklo lajsna Z40-668	Glazing bead Z40-668	Lkr-160	4	90-90
Staklo lajsna Z40-668	Glazing bead Z40-668	Hpreč.-146.5	2	90-90
Staklo lajsna Z40-668	Glazing bead Z40-668	H-(Hpreč.+204.5)	2	90-90
Prečka FT-0575F	Transom FT-0575F	Lkr-147	1	90-90
Kutna spojnica 710.131	Corner bracket 710.131		2	
Kutna spojnica 710.133	Corner bracket 710.133		4	
Kutna spojnica 710.140	Corner bracket 710.140		2	
Kutna spojnica 710.134	Corner bracket 710.134		4	
Kutna spojnica 731.010	Corner bracket 731.010		4	
Kutna spojnica 730.001	Corner bracket 730.001		6	
Veznik prečke 710.066	T bracket 710.066		4	
Veznik prečke 710.171	T bracket 710.171		4	
Centralna brtva rama 334.009	Central gasket-frame 334.009	1L+2H		
Centralna brtva krila 334.010	Central gasket-sash 334.010	2Lkr+2Hkr		
Brtva prema staklu vanjska 321.003	Glazing gasket -external- 321.003	4Lkr+2Hkr		
Brtva prema staklu unutarnja 311.004	Glazing gasket -internal- 311.004	4Lkr+2Hkr		
Brtva na spoju rama i krila 321.006	Rebate gasket 321.006	1L+2H+2Lkr+2Hkr		
Brtva praga 331.012	Threshold gasket 331.012	L-154	1	90-90
Izolacijski umetak 340.013	Underglass insulator 340.013	4(Lkr-170)+2(Hpr.-118)+2/Hkr-(Hpr+118)/		
Umetak na pragu 373.020	End cap for threshold 373.020		1 par	
Brava G-U Secury s MR2 (35) tri ključanja 122.016	Multipoint lock - G-U Secury MR2 (35) -122.016		1	
Prihvatna pločica 24x6x2 122.028	Striking plate 24x6x2 122.028		2	
Prihvatni lim 24x6 (desni) 122.029	Striking plate 24x6 (right) 122.029		1	
Trodijelna cilindrična šarka 112.012.01 - bijela	Barrel door hinge-3 part 112.012.01 - white	2 ili (3) po krilu ovisno o visini i tež.krila 2 or (3) per sash(dep. of height and weight of sash)		
Ručka za vrata 102.028	Door handle 102.028		2	
Četvrtka 102.025	Square spindle 102.025		1	
Cilindar (35-75) 122.095	Cylinder (35-75) 122.095		1	
Štitnik cilindra 122.098	Cylinder rosette 122.098		2	
Protuprovalni umetak 141.002	Security pin 141.002		2	
Vijak 433.093	Screw 433.093		3	
Staklo 40 mm	Glass 40 mm	(Lkr.-174)x(Hpr.-118)		1
Staklo 40 mm	Glass 40 mm	(Lkr.-174)x/Hkr-(Hpr.+118)/		1



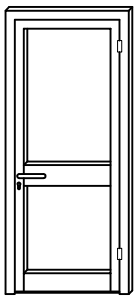




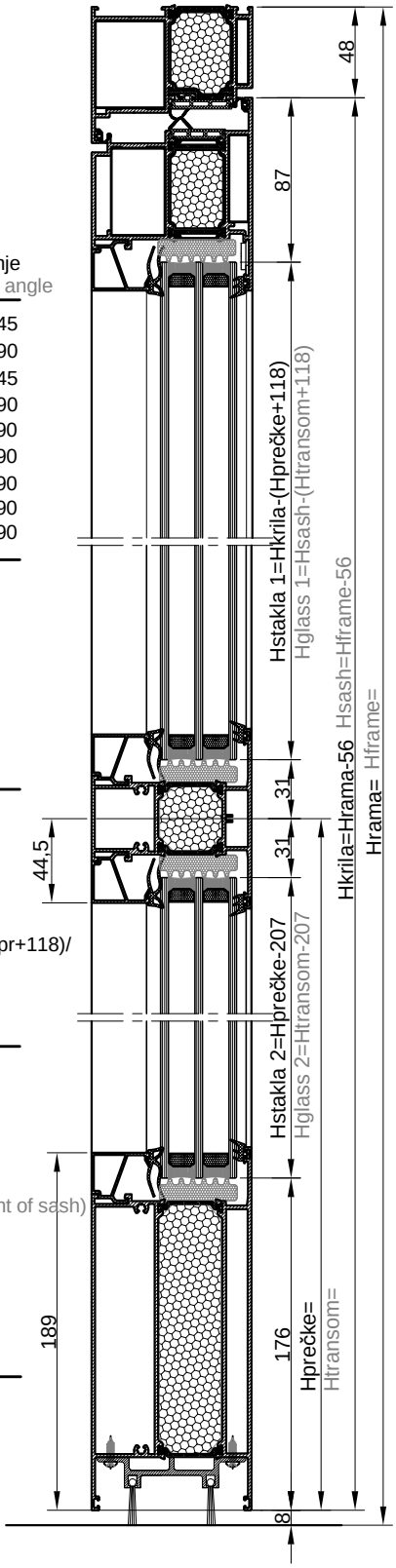
naziv name		mjera dimension	kom. pcs.	pilanje sawing angle
Ram FT-0552F	Frame FT-0552F	L	1	45-45
Ram FT-0552F	Frame FT-0552F	H	2	45-90
Krilo FT-0564F	Sash FT-0564F	L-96	2	45-45
Krilo FT-0564F	Sash FT-0564F	H-58	2	45-45
Prag FT-0585F	Threshold FT-0585F	L-154	1	90-90
Umetak F-1188	Additional profile F-1188	Lkr-58	1	90-90
Staklo lajsna Z40-667	Glazing bead Z40-667	Lkr-180	4	90-90
Staklo lajsna Z40-667	Glazing bead Z40-667	Hpreč.-146.5	2	90-90
Staklo lajsna Z40-667	Glazing bead Z40-667	H-(Hpreč.+212.5)	2	90-90
Prečka FT-0575F	Transom FT-0575F	Lkr-167	1	90-90
Kutna spojnica 710.131	Corner bracket 710.131		2	
Kutna spojnica 710.133	Corner bracket 710.133		4	
Kutna spojnica 710.140	Corner bracket 710.140		2	
Kutna spojnica 710.134	Corner bracket 710.134		4	
Kutna spojnica 731.010	Corner bracket 731.010		4	
Kutna spojnica 730.001	Corner bracket 730.001		10	
Veznik prečke 710.066	T bracket 710.066		4	
Veznik prečke 710.171	T bracket 710.171		4	
Centralna brtva rama 334.009	Central gasket-frame 334.009	1L+2H		
Centralna brtva krila 334.010	Central gasket-sash 334.010	2Lkr+2Hkr		
Brtva prema staklu vanjska 321.003	Glazing gasket -external- 321.003	4Lkr+2Hkr		
Brtva prema staklu unutarnja 311.004	Glazing gasket -internal- 311.004	4Lkr+2Hkr		
Brtva na spoju rama i krila 321.006	Rebate gasket 321.006	1L+2H+2Lkr+2Hkr		
Brtva praga 331.012	Threshold gasket 331.012	L-154	1	90-90
Izolacijski umetak 340.013	Underglass insulator 340.013	4(Lkr-150)+2(Hpr.-128)+2/Hkr-(Hpr+128)/		
Umetak na pragu 373.020	End cap for threshold 373.020		1 par	
Brava G-U Secury s MR2 (45) tri ključanja 122.015	Multipoint lock - G-U Secury MR2 (45) -122.015		1	
Prihvatna pločica 24x6x2 122.028	Striking plate 24x6x2 122.028		2	
Prihvatni lim 24x6 (desni) 122.029	Striking plate 24x6 (right) 122.029		1	
Trodijelna cilindrična šarka 112.012.01 - bijela	Barrel door hinge-3 part 112.012.01 - white	2 ili (3) po krilu ovisno o visini i tež.krila 2 or (3) per sash(dep. of height and weight of sash)		
Ručka za vrata 102.028	Door handle 102.028		2	
Četvrtka 102.025	Square spindle 102.025		1	
Cilindar (35-75) 122.095	Cylinder (35-75) 122.095		1	
Štitnik cilindra 122.098	Cylinder rosette 122.098		2	
Protuprovalni umetak 141.002	Security pin 141.002		2	
Vijak 433.093	Screw 433.093		3	
Staklo 44 mm	Glass 44 mm	(Lkr.-194)x(Hpr.-128)	1	
Staklo 44 mm	Glass 44 mm	(Lkr.-194)x/Hkr-(Hpr.+128)/	1	

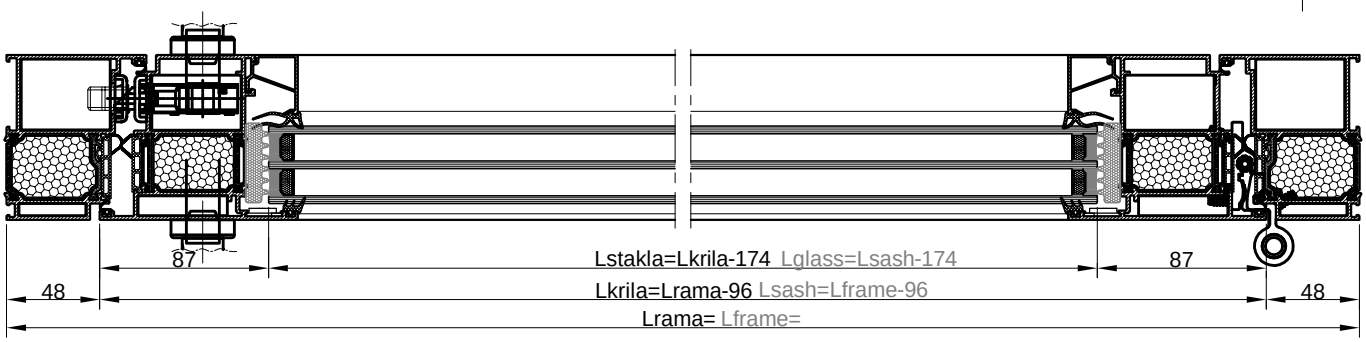


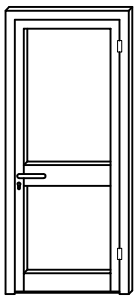




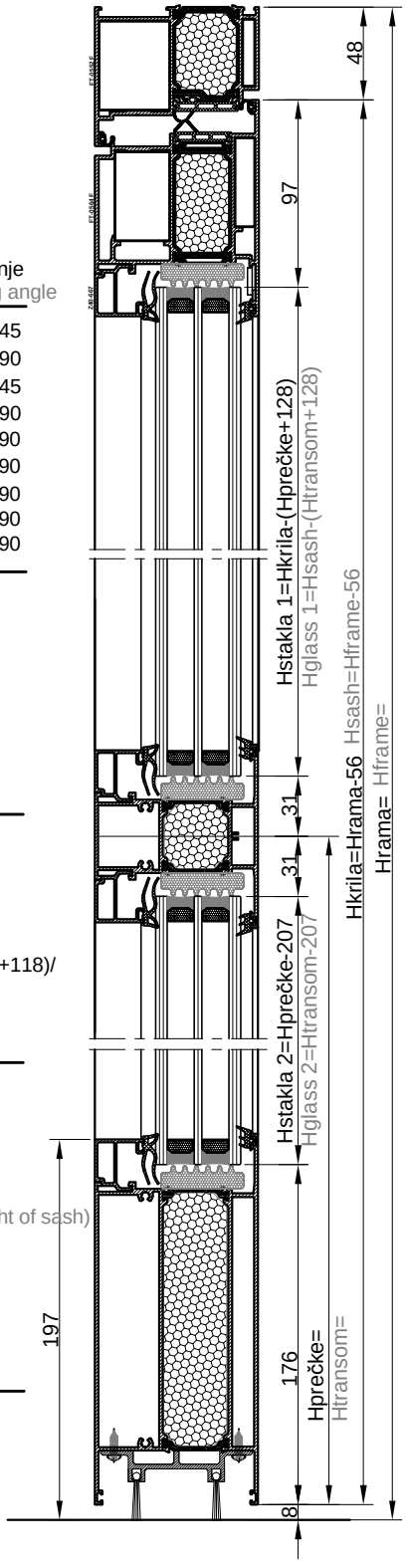
naziv name		mjera dimension	kom. pcs.	pilanje sawing angle
Ram FT-0552F	Frame FT-0552F	L	1	45-45
Ram FT-0552F	Frame FT-0552F	H	2	45-90
Krilo FT-0562F	Sash FT-0562F	L-96	1	45-45
Krilo FT-0562F	Sash FT-0562F	H-56	2	45-90
Staklo lajsna Z40-668	Glazing bead Z40-668	Lkr-160	4	90-90
Staklo lajsna Z40-668	Glazing bead Z40-668	Hpreč.-233.5	2	90-90
Staklo lajsna Z40-668	Glazing bead Z40-668	Hkr-(Hpreč.+146.5)	2	90-90
Prečka FT-0575F	Transom FT-0575F	Lkr-147	1	90-90
Parapetna prečka FT-0576F	Transom-bottom sash prof. FT-0576F	Lkr-147	1	90-90
Kutna spojnica 710.131	Corner bracket 710.131		2	
Kutna spojnica 710.133	Corner bracket 710.133		2	
Kutna spojnica 710.140	Corner bracket 710.140		2	
Kutna spojnica 710.134	Corner bracket 710.134		2	
Kutna spojnica 731.010	Corner bracket 731.010		2	
Kutna spojnica 730.001	Corner bracket 730.001		6	
Veznik prečke 710.066	T bracket 710.066		8	
Veznik prečke 710.171	T bracket 710.171		8	
Centralna brtva rama 334.009	Central gasket-frame 334.009	1L+2H		
Centralna brtva krila 334.010	Central gasket-sash 334.010	1Lkr+2Hkr		
Brtva prema staklu vanjska 321.003	Glazing gasket -external- 321.003	4Lkr+2Hkr		
Brtva prema staklu unutarnja 311.004	Glazing gasket -internal- 311.004	4Lkr+2Hkr		
Brtva na spoju rama i krila 321.006	Rebate gasket 321.006	(1Lrama+2Hrama)+(1Lkr+2Hkr)		
Izolacijski umetak 340.013	Underglass insulator 340.013	4(Lkr-150)+2(Hpr.-207)+2/Hkr-(Hpr+118)/		
Pvc umetak u parapet. prečki 374.048	Pvc prof. for transom /bottom sash prof./ 374.048	Lkr-54	1	
Četkasta brtva 347.001	Brush seal 347.001		2	
Brava G-U Secury s MR2 (35) tri ključanja 122.016	Multipoint lock - G-U Secury MR2 (35) -122.016		1	
Prihvatna pločica 24x6x2 122.028	Striking plate 24x6x2 122.028		2	
Prihvatni lim 24x6 (desni) 122.029	Striking plate 24x6 (right) 122.029		1	
Trodijelna cilindrična šarka 112.012.01 - bijela	Barrel door hinge-3 part 112.012.01 - white	2 ili (3) po krilu ovisno o visini i tež.krila 2 or (3) per sash(dep. of height and weight of sash)		
Ručka za vrata 102.028	Door handle 102.028		2	
Četvrtka 102.025	Square spindle 102.025		1	
Cilindar (35-75) 122.095	Cylinder (35-75) 122.095		1	
Štitnik cilindra 122.098	Cylinder rosette 122.098		2	
Protuprovalni umetak 141.002	Security pin 141.002		2	
Staklo 40 mm	Glass 40 mm	(Lkr.-174)x(Hpr.-207)	1	
Staklo 40 mm	Glass 40 mm	(Lkr.-174)x/Hkr-(Hpr.+118)/	1	

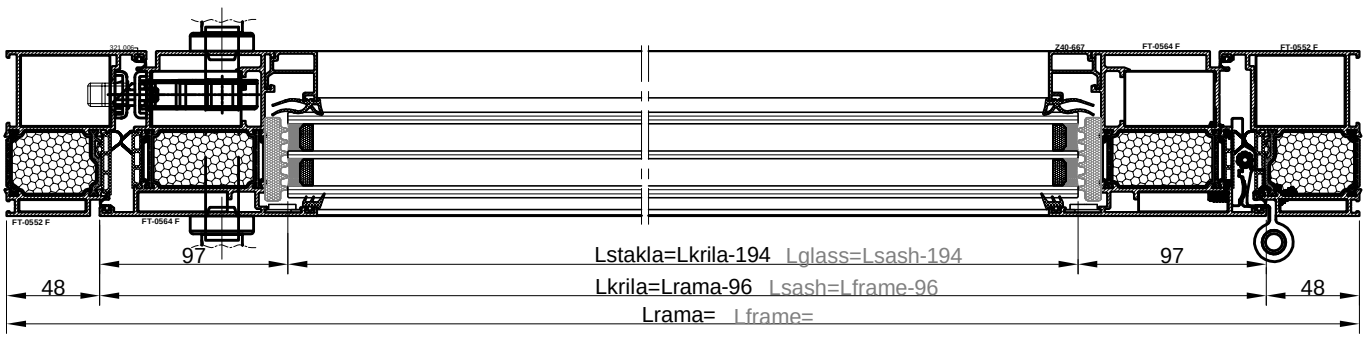


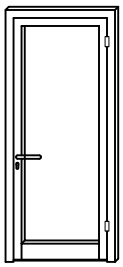




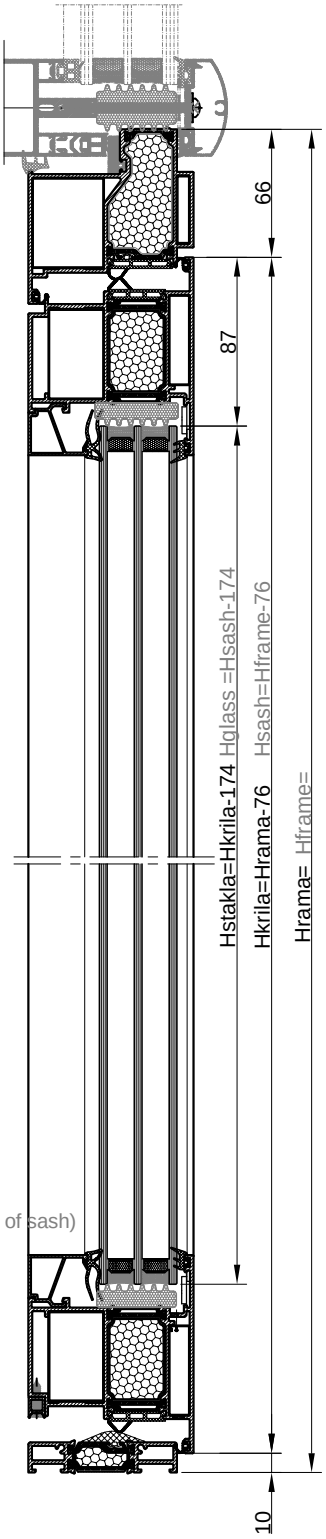
naziv name		mjera dimension	kom. pcs.	pilanje sawing angle
Ram FT-0552F	Frame FT-0552F	L	1	45-45
Ram FT-0552F	Frame FT-0552F	H	2	45-90
Krilo FT-0564F	Sash FT-0564F	L-96	1	45-45
Krilo FT-0564F	Sash FT-0564F	H-56	2	45-90
Staklo lajsna Z40-667	Glazing bead Z40-667	Lkr-180	4	90-90
Staklo lajsna Z40-667	Glazing bead Z40-667	Hpreč.-241.5	2	90-90
Staklo lajsna Z40-667	Glazing bead Z40-667	Hkr-(Hpreč.+156.5)	2	90-90
Prečka FT-0575F	Transom FT-0575F	Lkr-167	1	90-90
Parapetna prečka FT-0576F	Tran.-bottom sash prof. FT-0576F	Lkr-167	1	90-90
Kutna spojnica 710.131	Corner bracket 710.131		2	
Kutna spojnica 710.133	Corner bracket 710.133		2	
Kutna spojnica 710.140	Corner bracket 710.140		2	
Kutna spojnica 710.134	Corner bracket 710.134		2	
Kutna spojnica 731.010	Corner bracket 731.010		4	
Kutna spojnica 730.001	Corner bracket 730.001		2	
Veznik prečke 710.066	T bracket 710.066		8	
Veznik prečke 710.171	T bracket 710.171		8	
Centralna brtva rama 334.009	Central gasket-frame 334.009	1L+2H		
Centralna brtva krila 334.010	Central gasket-sash 334.010	1Lkr+2Hkr		
Brtva prema staklu vanjska 321.003	Glazing gasket -external- 321.003	4Lkr+2Hkr		
Brtva prema staklu unutarnja 311.004	Glazing gasket -internal- 311.004	4Lkr+2Hkr		
Brtva na spoju rama i krila 321.006	Rebate gasket 321.006	(1Lrama+2Hrama)+(1Lkr+2Hkr)		
Izolacijski umetak 340.013	Underglass insulator 340.013	4(Lkr-150)+2(Hpr.-207)+2/Hkr-(Hpr+118)/		
Pvc umetak u parapet. prečki 374.048	Pvc prof. for transom /bottom sash prof./ 374.048	Lkr-54	1	
Četkasta brtva 347.001	Brush seal 347.001	Lkr-54	2	
Brava G-U Secury s MR2 (45) tri ključanja 122.015	Multipoint lock - G-U Secury MR2 (45) -122.015		1	
Prihvatna pločica 24x6x2 122.028	Striking plate 24x6x2 122.028		2	
Prihvatni lim 24x6 (desni) 122.029	Striking plate 24x6 (right) 122.029		1	
Trodijelna cilindrična šarka 112.012.01 - bijela	Barrel door hinge-3 part 112.012.01 - white	2 ili (3) po krilu ovisno o visini i tež.krila 2 or (3) per sash(dep. of height and weight of sash)		
Ručka za vrata 102.028	Door handle 102.028		2	
Četvrtka 102.025	Square spindle 102.025		1	
Cilindar (35-75) 122.095	Cylinder (35-75) 122.095		1	
Štitnik cilindra 122.098	Cylinder rosette 122.098		2	
Protuprovalni umetak 141.002	Security pin 141.002		2	
Staklo 44 mm	Glass 44 mm	(Lkr.-194)x(Hpr.-207)	1	
Staklo 44 mm	Glass 44 mm	(Lkr.-194)x/Hkr-(Hpr.+128)/	1	

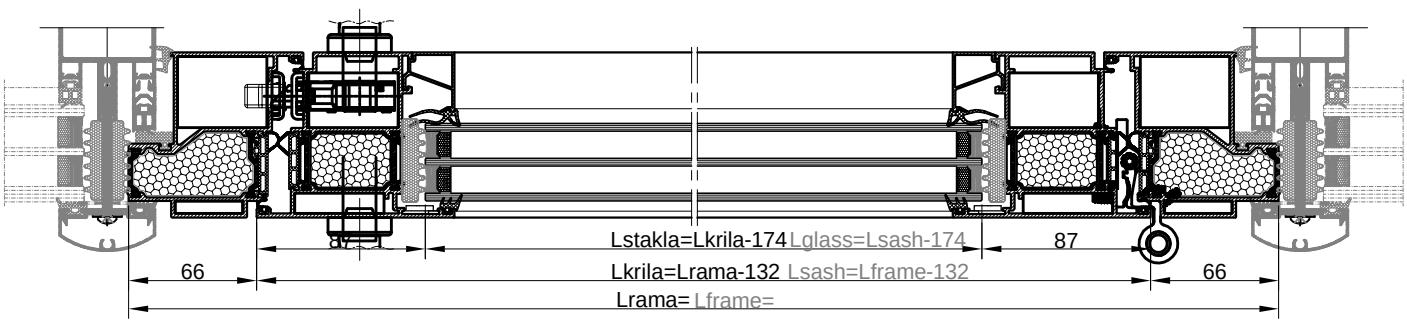


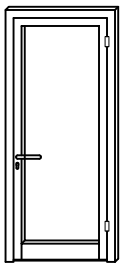




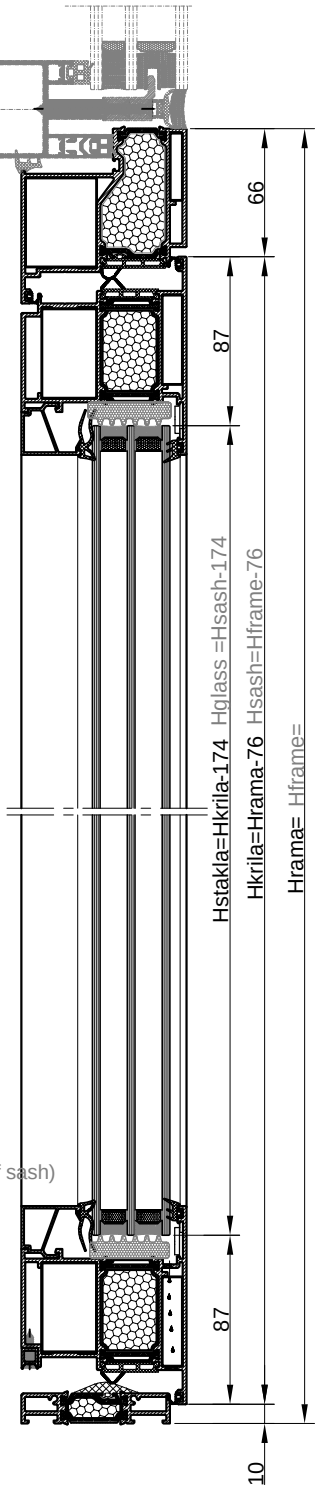
naziv name		mjera dimension	kom. pcs.	pilanje sawing angle
Ram FT-0553F	Frame FT-0553F	L	1	45-45
Ram FT-0553F	Frame FT-0553F	H	2	45-90
Krilo FT-0562F	Sash FT-0562F	L-132	2	45-45
Krilo FT-0562F	Sash FT-0562F	H-76	2	45-45
Prag FT-0585F	Threshold FT-0585F	L-190	1	90-90
Umetak F-1188	Additional profile F-1188	Lkr-58	1	90-90
Staklo lajsna Z40-668	Glazing bead Z40-668	Lkr-160	2	90-90
Staklo lajsna Z40-668	Glazing bead Z40-668	Hkr-204	2	90-90
Kutna spojnica 710.131	Corner bracket 710.131		2	
Kutna spojnica 710.133	Corner bracket 710.133		4	
Kutna spojnica 710.140	Corner bracket 710.140		2	
Kutna spojnica 710.134	Corner bracket 710.134		4	
Kutna spojnica 731.010	Corner bracket 731.010		4	
Kutna spojnica 730.001	Corner bracket 730.001		10	
Centralna brtva rama 334.009	Central gasket-frame 334.009	1L+2H		
Centralna brtva krila 334.010	Central gasket-sash 334.010	2Lkr+2Hkr		
Centralna brtva praga 331.012	Threshold gasket 331.012	L-190	1	90-90
Brtva prema staklu vanjska 321.003	Glazing gasket -external- 321.003	2Lkr+2Hkr		
Brtva prema staklu unutarnja 311.004	Glazing gasket -internal- 311.004	2Lkr+2Hkr		
Brtva na spoju rama i krila 321.006	Rebate gasket 321.006	(1Lrama+2Hrama)+(2Lkr+2Hkr)		
Izolacijski umetak 340.013	Underglass insulator 340.013	2(Lkr-150)+2(Hkr-174)		
Umetak na pragu 373.020	End cap for threshold 373.020	1 par		
Brava G-U Secury s MR2 (35) tri ključanja 122.016	Multipoint lock - G-U Secury MR2 (35) -122.016		1	
Prihvatna pločica 24x6x2 122.028	Striking plate 24x6x2 122.028		2	
Prihvatni lim 24x6 (desni) 122.029	Striking plate 24x6 (right) 122.029		1	
Trodijelna cilindrična šarka 112.012.01 - bijela	Barrel door hinge-3 part 112.012.01 - white	2 ili (3) po krilu ovisno o visini i tež.krila 2 or (3) per sash(dep. of height and weight of sash)		
Ručka za vrata 102.028	Door handle 102.028		2	
Četvrtka 102.025	Square spindle 102.025		1	
Cilindar (35-75) 122.095	Cylinder (35-75) 122.095		1	
Štitnik cilindra 122.098	Cylinder rosette 122.098		2	
Protuprovalni umetak 141.002	Security pin 141.002		2	
Vijak 433.093	Screw 433.093		3	
Staklo 40 mm	Glass 40 mm	(Lkr.-174)x(Hkr.-174)		

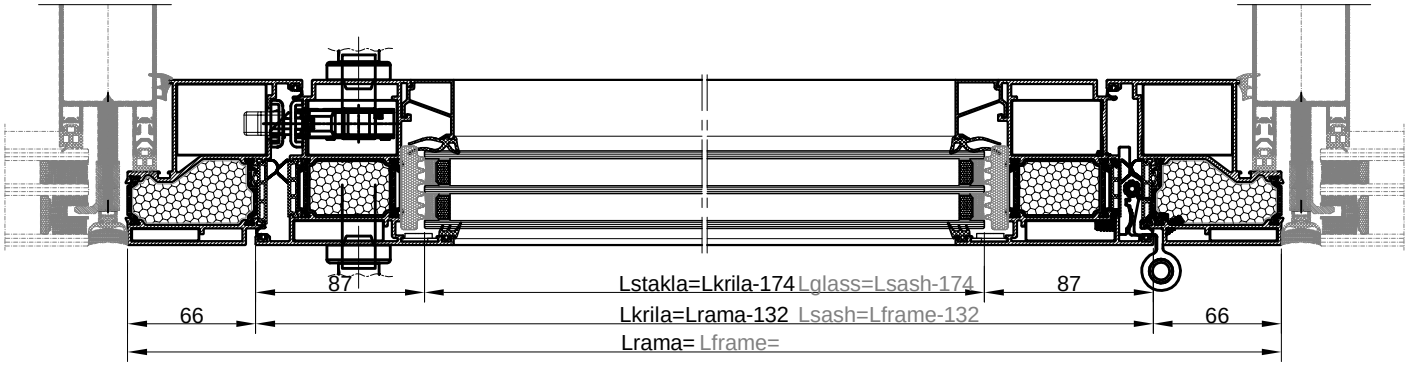


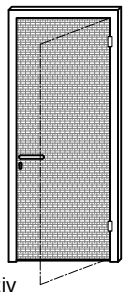




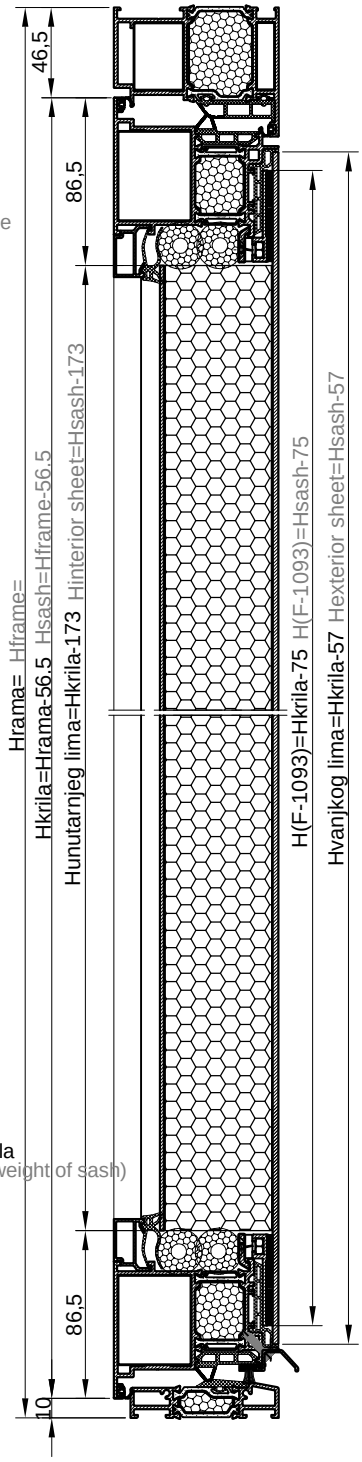
naziv name		mjera dimension	kom. pcs.	pilanje sawing angle
Ram FT-0554F	Frame FT-0554F	L	1	45-45
Ram FT-0554F	Frame FT-0554F	H	2	45-90
Krilo FT-0562F	Sash FT-0562F	L-132	2	45-45
Krilo FT-0562F	Sash FT-0562F	H-76	2	45-45
Prag FT-0585F	Threshold FT-0585F	L-190	1	90-90
Umetak F-1188	Additional profile F-1188	Lkr-58	1	90-90
Staklo lajsna Z40-668	Glazing bead Z40-668	Lkr-160	2	90-90
Staklo lajsna Z40-668	Glazing bead Z40-668	Hkr-204	2	90-90
Kutna spojnica 710.131	Corner bracket 710.131		2	
Kutna spojnica 710.133	Corner bracket 710.133		4	
Kutna spojnica 710.140	Corner bracket 710.140		2	
Kutna spojnica 710.134	Corner bracket 710.134		4	
Kutna spojnica 731.010	Corner bracket 731.010		4	
Kutna spojnica 730.001	Corner bracket 730.001		6	
Centralna brtva rama 334.009	Central gasket-frame 334.009	1L+2H		
Centralna brtva krila 334.010	Central gasket-sash 334.010	2Lkr+2Hkr		
Centralna brtva praga 331.012	Threshold gasket 331.012	L-190	1	90-90
Brtva prema staklu vanjska 321.003	Glazing gasket -external- 321.003	2Lkr+2Hkr		
Brtva prema staklu unutarnja 311.004	Glazing gasket -internal- 311.004	2Lkr+2Hkr		
Brtva na spoju rama i krila 321.006	Rebate gasket 321.006	(1Lrama+2Hrama)+(2Lkr+2Hkr)		
Izolacijski umetak 340.013	Underglass insulator 340.013	2(Lkr-150)+2(Hkr-174)		
Umetak na pragu 373.020	End cap for threshold 373.020	1 par		
Brava G-U Secury s MR2 (35) tri ključanja 122.016	Multipoint lock - G-U Secury MR2 (35) -122.016		1	
Prihvatna pločica 24x6x2 122.028	Striking plate 24x6x2 122.028		2	
Prihvatni lim 24x6 (desni) 122.029	Striking plate 24x6 (right) 122.029		1	
Trodijelna cilindrična šarka 112.012.01 - bijela	Barrel door hinge-3 part 112.012.01 - white	2 ili (3) po krilu ovisno o visini i tež.krila 2 or (3) per sash(dep. of height and weight of sash)		
Ručka za vrata 102.028	Door handle 102.028		2	
Četvrtka 102.025	Square spindle 102.025		1	
Cilindar (35-75) 122.095	Cylinder (35-75) 122.095		1	
Štitnik cilindra 122.098	Cylinder rosette 122.098		2	
Protuprovalni umetak 141.002	Security pin 141.002		2	
Vijak 433.093	Screw 433.093		3	
Staklo 40 mm	Glass 40 mm	(Lkr.-174)x(Hkr.-174)	1	

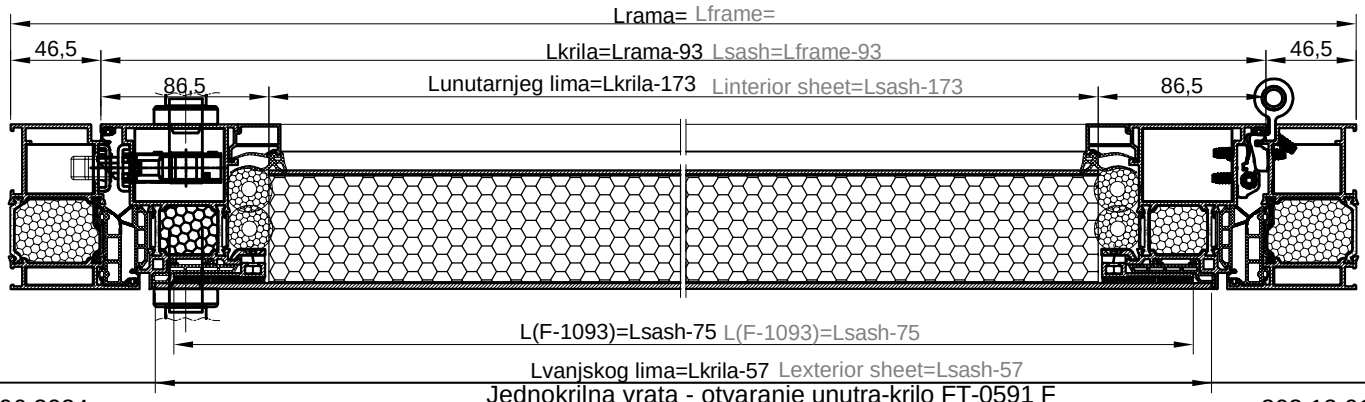


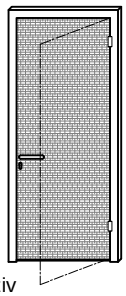




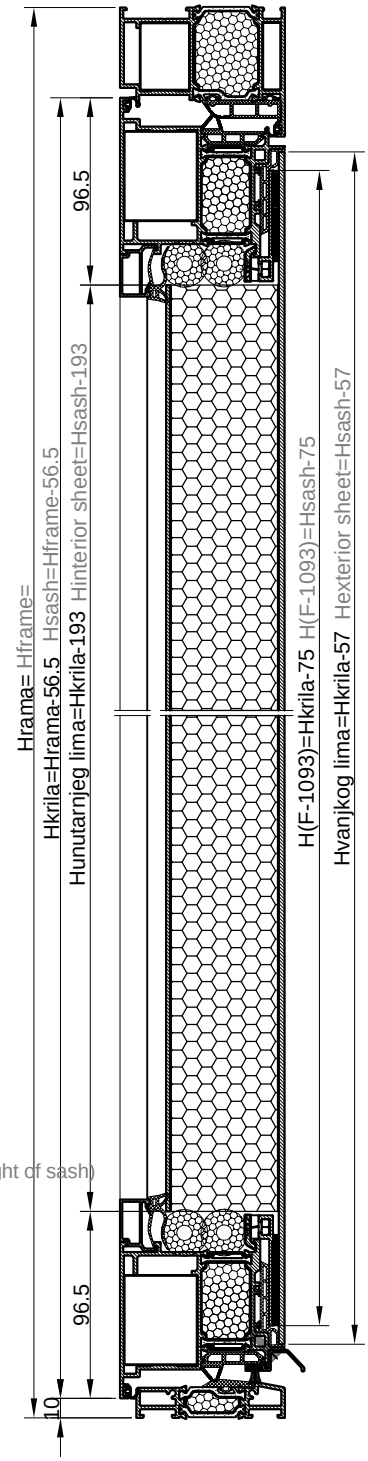
naziv name		mjera dimension	kom. pcs.	pilanje sawing angle
Ram FT-0551F	Frame FT-0551F	L	1	45-45
Ram FT-0551F	Frame FT-0551F	H	2	45-90
Krilo FT-0591F	Sash FT-0591F	L-93	2	45-45
Krilo FT-0591F	Sash FT-0591F	H-56.5	2	45-45
Prag FT-0584F	Threshold FT-0584F	L-164	1	90-90
Okapnica F-1200	Drip cap profile F-1200	Lkr-54	1	90-90
Staklo lajsna Z40-665	Glazing bead Z40-665	Lkr-141	2	90-90
Staklo lajsna Z40-665	Glazing bead Z40-665	Hkr-185	2	90-90
Al profil F-1093	Al profile F-1093	Lkr-76	2	45-45
Al profil F-1093	Al profile F-1093	Hkr-76	2	45-45
Kutna spojnica 710.143	Corner bracket 710.143		2	
Kutna spojnica 710.141	Corner bracket 710.141		2	
Kutna spojnica 710.136	Corner bracket 710.136		4	
Kutna spojnica 710.015	Corner bracket 710.015		4	
Kutna spojnica 710.203	Corner bracket 710.203		4	
Kutna spojnica 730.001	Corner bracket 730.001		6	
Kopča 141.001	Panel clamp 141.001		(2Lkr+2Hkr)/250	
Centralna brtva rama 334.005	Central gasket-frame 334.005	1L+2H		
Centralna brtva krila 334.006	Central gasket-sash 334.006	2Lkr+2Hkr		
Brtva na spoju rama i krila 321.006	Rebate gasket 321.006	3Lkr+4Hkr		
Brtva 344.004	Gasket 344.004	2(Lkr-53)+2(Hkr-53)		
Brtva prema panelu unut. 311.005	Panel gasket-internal 311.005	2Lkr+2Hkr		
Brtva praga 331.013	Threshold gasket 331.013	L-164	1	90-90
Četkica 7x9 347.003	Brush seal 7x9 347.003	Lkr-35	1	90-90
Čep okapnice F-1200 373.027	End cap for F-1200 373.027		1 par	
Umetak na pragu 373.019	End cap for threshold 373.019		1 par	
Brava G-U Secury s MR2 (35) tri ključanja 122.016	Multipoint lock - G-U Secury MR2 (35) -122.016		1	
Prihvatna pločica 24x6x2 122.028	Striking plate 24x6x2 122.028		2	
Prihvatni lim 24x6 (lijevi) 122.081	Striking plate 24x6 (left) 122.081		1	
Trodijelna cilindrična šarka 112.011.01 - bijela	Barrel door hinge-3 part 112.011.01 - white	2 ili (3) po krilu ovisno o visini i tež.krila 2 or (3) per sash(dep. of height and weight of sash)		
Ručka za vrata 102.028	Door handle 102.028		2	
Četvrtka 102.025	Square spindle 102.025		1	
Cilindar (35-75) 122.095	Cylinder (35-75) 122.095		1	
Štitnik cilindra 122.098	Cylinder rosette 122.098		2	
Protuprovalni umetak 141.002	Security pin 141.002		2	
Vijak 433.094	Screw 433.094		3	
Izolacijski umetak Ø25 340.035	Underpanel insulator Ø25 340.035	4(Lkr-173)+4(Hkr-131)		
Vanjski lim panela 3 mm	Exterior sheet 3 mm	(Lkr.-57)x(Hkr.-57)	1	
Unutarnji lim panela 2 mm	Interior sheet 2 mm	(Lkr.-173)x(Hkr.-173)	1	
Stirodur za panel (60 mm)	Stirodur za panel (60 mm)	(Lkr.-173)x(Hkr.-173)	1	

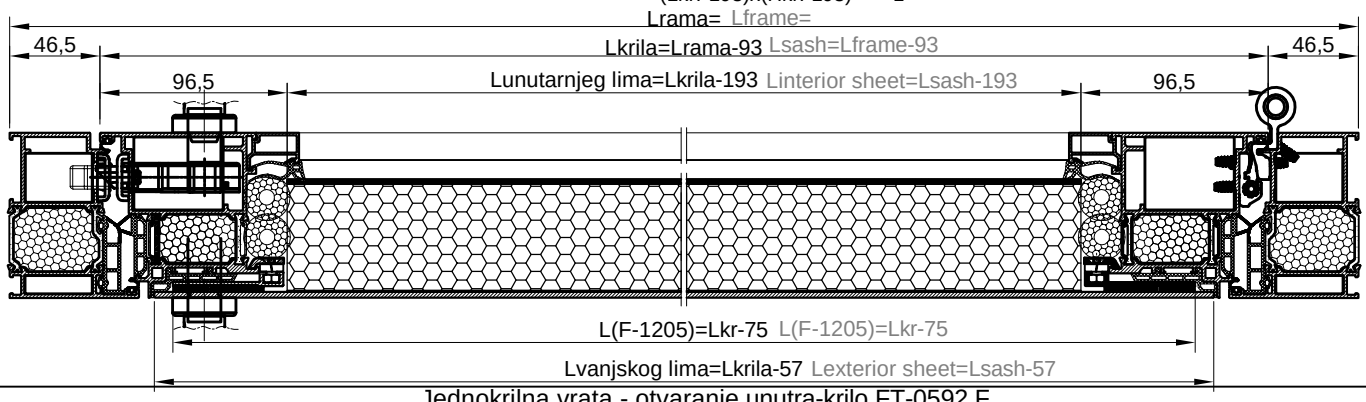


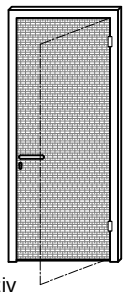




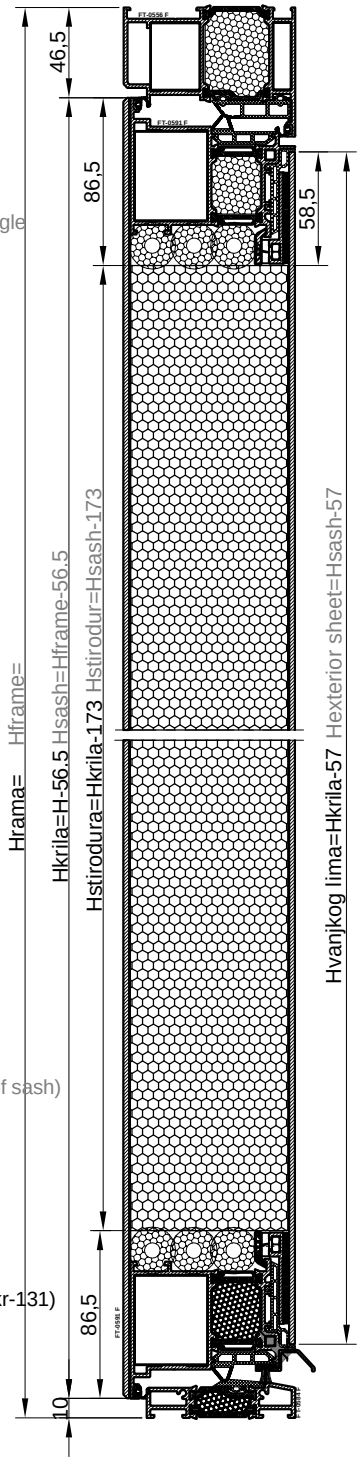
naziv name		mjera dimension	kom. pcs.	pilanje sawing angle
Ram FT-0551F	Frame FT-0551F	L	1	45-45
Ram FT-0551F	Frame FT-0551F	H	2	45-90
Krilo FT-0592F	Sash FT-0592F	L-93	2	45-45
Krilo FT-0592F	Sash FT-0592F	H-56.5	2	45-45
Prag FT-0584F	Threshold FT-0584F	L-164	1	90-90
Okapnica F-1200	Drip cap profile F-1200	Lkr-54	1	90-90
Staklo lajsna Z40-665	Glazing bead Z40-665	Lkr-161	2	90-90
Staklo lajsna Z40-665	Glazing bead Z40-665	Hkr-205	2	90-90
Al profil F-1205	Al profile F-1205	Lkr-76	2	45-45
Al profil F-1205	Al profile F-1205	Hkr-76	2	45-45
Kutna spojnica 710.143	Corner bracket 710.143		2	
Kutna spojnica 710.141	Corner bracket 710.141		2	
Kutna spojnica 710.136	Corner bracket 710.136		4	
Kutna spojnica 710.015	Corner bracket 710.015		4	
Kutna spojnica 710.203	Corner bracket 710.203		4	
Kutna spojnica 730.001	Corner bracket 730.001		6	
Kopča 141.001	Panel clamp 141.001		(2Lkr+2Hkr)/250	
Centralna brtva rama 334.005	Central gasket-frame 334.005	1L+2H		
Centralna brtva krila 334.006	Central gasket-sash 334.006	2Lkr+2Hkr		
Brtva na spoju rama i krila 321.006	Rebate gasket 321.006	3Lkr+4Hkr		
Brtva 344.004	Gasket 344.004	2(Lkr-53)+2(Hkr-53)		
Brtva prema panelu unut. 311.005	Panel gasket-internal 311.005	2Lkr+2Hkr		
Brtva praga 331.013	Threshold gasket 331.013	L-164	1	90-90
Četkica 7x9 347.003	Brush seal 7x9 347.003	Lkr-35	1	90-90
Čep okapnice F-1200 373.027	End cap for F-1200 373.027		1 par	
Umetak na pragu 373.019	End cap for threshold 373.019		1 par	
Brava G-U Secury s MR2 (45) tri ključanja 122.015	Multipoint lock - G-U Secury MR2 (45) -122.015		1	
Prihvatna pločica 24x6x2 122.028	Striking plate 24x6x2 122.028		2	
Prihvatni lim 24x6 (lijevi) 122.081	Striking plate 24x6 (left) 122.081		1	
Trodijelna cilindrična šarka 112.011.01 - bijela	Barrel door hinge-3 part 112.011.01 - white	2 ili (3) po krilu ovisno o visini i tež.krila 2 or (3) per sash(dep. of height and weight of sash)		
Ručka za vrata 102.028	Door handle 102.028		2	
Četvrtka 102.025	Square spindle 102.025		1	
Cilindar (35-75) 122.095	Cylinder (35-75) 122.095		1	
Štitnik cilindra 122.098	Cylinder rosette 122.098		2	
Protuprovalni umetak 141.002	Security pin 141.002		2	
Vijak 433.094	Screw 433.094		3	
Izolacijski umetak Ø25 340.035	Underpanel insulator Ø25 340.035		4(Lkr-192)+4(Hkr-151)	
Vanjski lim panela 3 mm	Exterior sheet 3 mm	(Lkr.-57)x(Hkr.-57)	1	
Unutarnji lim panela 2 mm	Interior sheet 2 mm	(Lkr.-193)x(Hkr.-193)	1	
Stirodur za panel (60 mm)	Stirodur za panel (60 mm)	(Lkr.-193)x(Hkr.-193)	1	

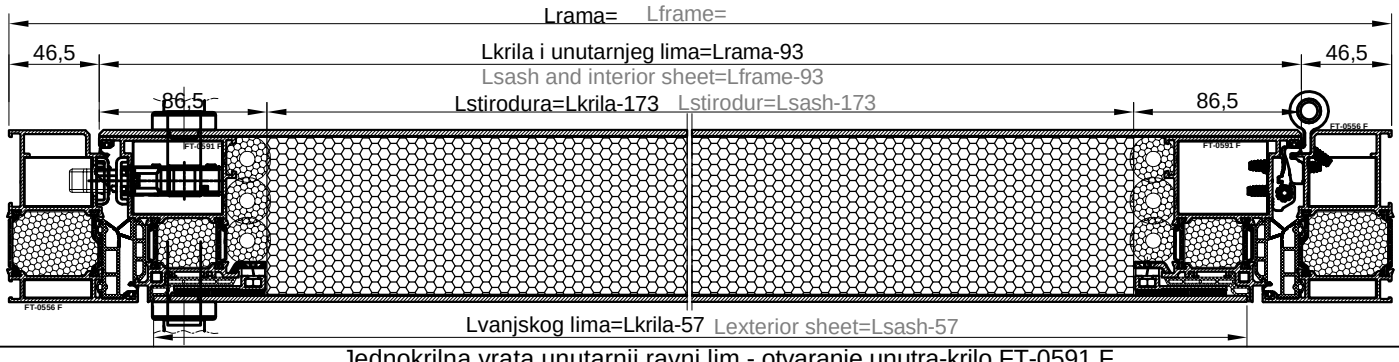


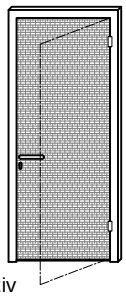




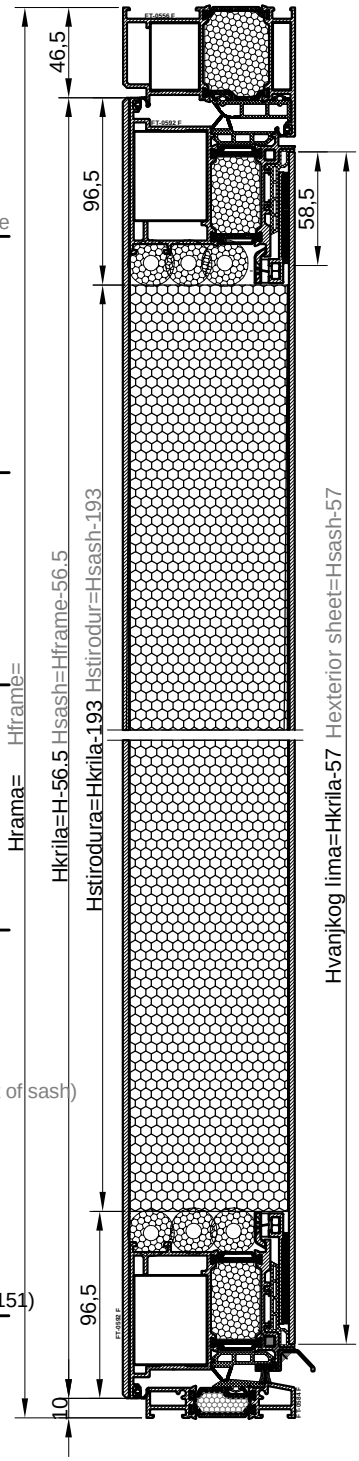
naziv name		mjera dimension	kom. pcs.	pilanje sawing angle
Ram FT-0556F	Frame FT-0556F	L	1	45-45
Ram FT-0556F	Frame FT-0556F	H	2	45-90
Krilo FT-0591F	Sash FT-0591F	L-93	2	45-45
Krilo FT-0591F	Sash FT-0591F	H-56.5	2	45-45
Prag FT-0584F	Threshold FT-0584F	L-164	1	90-90
Okapnica F-1200	Drip cap profile F-1200	Lkr-54	1	90-90
Al profil F-1093	Al profile F-1093	Lkr-76	2	45-45
Al profil F-1093	Al profile F-1093	Hkr-76	2	45-45
Kutna spojnica 710.143	Corner bracket 710.143		2	
Kutna spojnica 710.141	Corner bracket 710.141		2	
Kutna spojnica 710.136	Corner bracket 710.136		4	
Kutna spojnica 710.015	Corner bracket 710.015		4	
Kutna spojnica 710.203	Corner bracket 710.203		4	
Kutna spojnica 730.001	Corner bracket 730.001		6	
Kopča 141.001	Panel clamp 141.001		(2Lkr+2Hkr)/250	
Centralna brtva rama 334.005	Central gasket-frame 334.005	1L+2H		
Centralna brtva krila 334.006	Central gasket-sash 334.006	2Lkr+2Hkr		
Brtva na spoju rama i krila 321.006	Rebate gasket 321.006	3Lkr+4Hkr		
Brtva 344.004	Gasket 344.004	2(Lkr-53)+2(Hkr-53)		
Brtva praga 331.013	Threshold gasket 331.013	L-164	1	90-90
Četkica 7x9 347.003	Brush seal 7x9 347.003	Lkr-35	1	90-90
Čep okapnice F-1200 373.027	End cap for F-1200 373.027		1 par	
Umetak na pragu 373.019	End cap for threshold 373.019		1 par	
Brava G-U Secury s MR2 (35) tri ključanja 122.016	Multipoint lock - G-U Secury MR2 (35) -122.016		1	
Prihvatna pločica 24x6x2 122.028	Striking plate 24x6x2 122.028		2	
Prihvatni lim 24x6 (lijevi) 122.081	Striking plate 24x6 (left) 122.081		1	
Trodijelna cilindrična šarka 112.011.01 - bijela	Barrel door hinge-3 part 112.011.01 - white	2 ili (3) po krilu ovisno o visini i tež.krila 2 or (3) per sash(dep. of height and weight of sash)		
Ručka za vrata 102.028	Door handle 102.028		2	
Četvrtka 102.025	Square spindle 102.025		1	
Cilindar (35-75) 122.095	Cylinder (35-75) 122.095		1	
Štitnik cilindra 122.098	Cylinder rosette 122.098		2	
Protuprovalni umetak 141.002	Security pin 141.002		2	
Vijak 433.094	Screw 433.094		3	
Izolacijski umetak Ø25 340.035	Underpanel insulator Ø25 340.035		6(Lkr-173)+6(Hkr-131)	
Vanjski lim panela 3 mm	Exterior sheet 3 mm	(Lkr.-57)x(Hkr.-57)	1	
Unutarnji lim panela 3 mm	Interior sheet 3 mm	LkrxHkr	1	
Stirodur (ispuna panela 81.4 mm)	Stirodur (ispuna panela 81.4 mm)	(Lkrila-173)x(Hkrila-173) (Lkrila-173)x(Hkrila-173)	1	

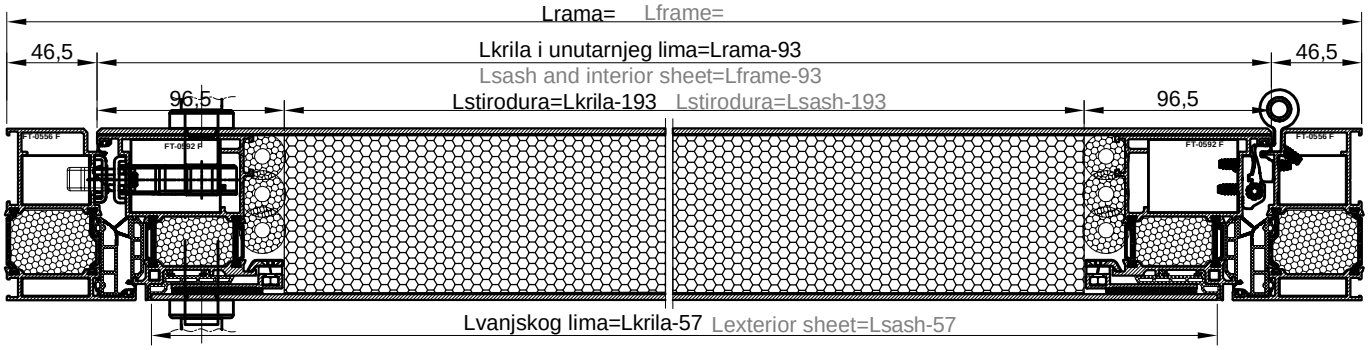


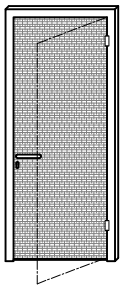




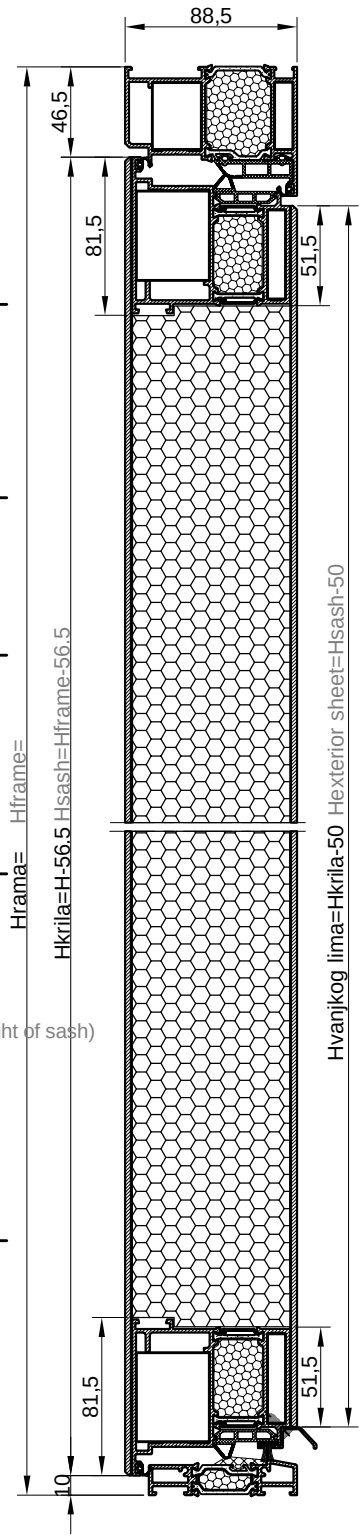
naziv name		mjera dimension	kom. pcs.	pilanje sawing angle
Ram FT-0556F	Frame FT-0556F	L	1	45-45
Ram FT-0556F	Frame FT-0556F	H	2	45-90
Krilo FT-0592F	Sash FT-0591F	L-93	2	45-45
Krilo FT-0592F	Sash FT-0591F	H-56.5	2	45-45
Prag FT-0584F	Threshold FT-0584F	L-164	1	90-90
Okapnica F-1200	Drip cap profile F-1200	Lkr-54	1	90-90
Al profil F-1205	Al profile F-1205	Lkr-76	2	45-45
Al profil F-1205	Al profile F-1205	Hkr-76	2	45-45
Kutna spojnica 710.143	Corner bracket 710.143		2	
Kutna spojnica 710.141	Corner bracket 710.141		2	
Kutna spojnica 710.136	Corner bracket 710.136		4	
Kutna spojnica 710.015	Corner bracket 710.015		4	
Kutna spojnica 710.203	Corner bracket 710.203		4	
Kutna spojnica 730.001	Corner bracket 730.001		6	
Kopča 141.001	Panel clamp 141.001		(2Lkr+2Hkr)/250	
Centralna brtva rama 334.005	Central gasket-frame 334.005	1L+2H		
Centralna brtva krila 334.006	Central gasket-sash 334.006	2Lkr+2Hkr		
Brtva na spoju rama i krila 321.006	Rebate gasket 321.006	3Lkr+4Hkr		
Brtva 344.004	Gasket 344.004	2(Lkr-53)+2(Hkr-53)		
Brtva praga 331.013	Threshold gasket 331.013	L-164	1	90-90
Četkica 7x9 347.003	Brush seal 7x9 347.003	Lkr-35	1	90-90
Čep okapnice F-1200 373.027	End cap for F-1200 373.027		1 par	
Umetak na pragu 373.019	End cap for threshold 373.019		1 par	
Brava G-U Secury s MR2 (45) tri ključanja 122.015	Multipoint lock - G-U Secury MR2 (45) -122.015		1	
Prihvatna pločica 24x6x2 122.028	Striking plate 24x6x2 122.028		2	
Prihvatni lim 24x6 (lijevi) 122.029	Striking plate 24x6 (left) 122.029		1	
Trodijelna cilindrična šarka 112.011.01 - bijela	Barrel door hinge-3 part 112.011.01 - white	2 ili (3) po krilu ovisno o visini i tež.krila 2 or (3) per sash(dep. of height and weight of sash)		
Ručka za vrata 102.028	Door handle 102.028		2	
Četvrtka 102.025	Square spindle 102.025		1	
Cilindar (35-75) 122.095	Cylinder (35-75) 122.095		1	
Štitnik cilindra 122.098	Cylinder rosette 122.098		2	
Protuprovalni umetak 141.002	Security pin 141.002		2	
Vijak 433.094	Screw 433.094		3	
Izolacijski umetak Ø25 340.035	Underpanel insulator Ø25 340.035		6(Lkr-193)+6(Hkr-151)	
Vanjski lim panela 3 mm	Exterior sheet 3 mm	(Lkr.-57)x(Hkr.-57)	1	
Unutarnji lim panela 3 mm	Interior sheet 3 mm	LkrxHkr	1	
Stirodur (ispuna panela 81.4 mm)	Stirodur (panel 81.4 mm)	(Lkrila-193)x(Hkrila-193) (Lsash-193)x(Hsash-193)	1	

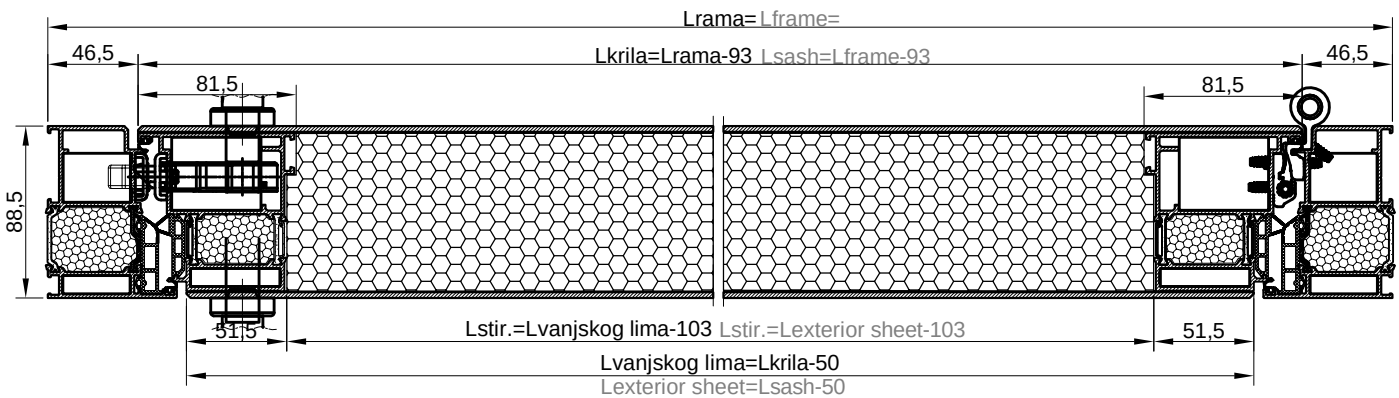


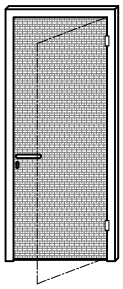




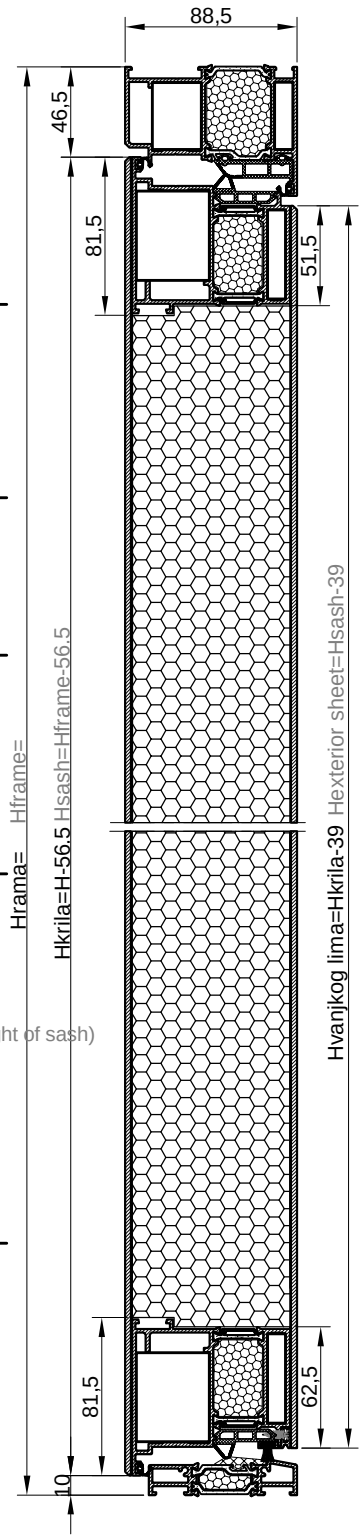
naziv name		mjera dimension	kom. pcs.	pilanje sawing angle
Ram FT-0556F	Frame FT-0556F	L	1	45-45
Ram FT-0556F	Frame FT-0556F	H	2	45-90
Krilo FT-0593F	Sash FT-0593F	L-93	2	45-45
Krilo FT-0593F	Sash FT-0593F	H-56.5	2	45-45
Prag FT-0584F	Threshold FT-0584F	L-164	1	90-90
Okapnica F-1200	Drip cap profile F-1200	Lkr-54	1	90-90
Kutna spojnica 710.143	Corner bracket 710.143		2	
Kutna spojnica 710.141	Corner bracket 710.141		2	
Kutna spojnica 710.136	Corner bracket 710.136		4	
Kutna spojnica 710.169	Corner bracket 710.169		4	
Kutna spojnica 730.001	Corner bracket 730.001		6	
Centralna brtva rama 334.005	Central gasket-frame 334.005	1L+2H		
Centralna brtva krila 334.006	Central gasket-sash 334.006	2Lkr+2Hkr		
Brtva na spoju rama i krila 321.006	Rebate gasket 321.006	3Lkr+4Hkr		
Brtva praga 331.013	Threshold gasket 331.013	L-164	1	90-90
Četkica 7x9 347.003	Brush seal 7x9 347.003	Lkr-35	1	90-90
Čep okapnice F-1200 373.027	End cap for F-1200 373.027		1 par	
Umetak na pragu 373.019	End cap for threshold 373.019		1 par	
Brava G-U Secury s MR2 (45) tri ključanja 122.015	Multipoint lock - G-U Secury MR2 (45) -122.015		1	
Prihvatna pločica 24x6x2 122.028	Striking plate 24x6x2 122.028		2	
Prihvatni lim 24x6 (lijevi) 122.029	Striking plate 24x6 (left) 122.029		1	
Trodijelna cilindrična šarka 112.011.01 - bijela	Barrel door hinge-3 part 112.011.01 - white	2 ili (3) po krilu ovisno o visini i tež.krila 2 or (3) per sash(dep. of height and weight of sash)		
Ručka za vrata 102.028	Door handle 102.028		2	
Četvrtka 102.025	Square spindle 102.025		1	
Cilindar (35-75) 122.095	Cylinder (35-75) 122.095		1	
Štitnik cilindra 122.098	Cylinder rosette 122.098		2	
Protuprovalni umetak 141.002	Security pin 141.002		2	
Vijak 433.094	Screw 433.094		3	
Vanjski lim panela 3 mm	Exterior sheet 3 mm	(Lkr.-50)x(Hkr.-50)	1	
Unutarnji lim panela 3 mm	Interior sheet 3 mm	LkrxHkr	1	
Stirodur (ispuna panela 81.4 mm)	Stirodur (panel 81.4 mm)	(Lvanj.lima-103)x(Hvanj.lima-103) (Lext.sheet-103)x(Hext.sheet-103)	1	

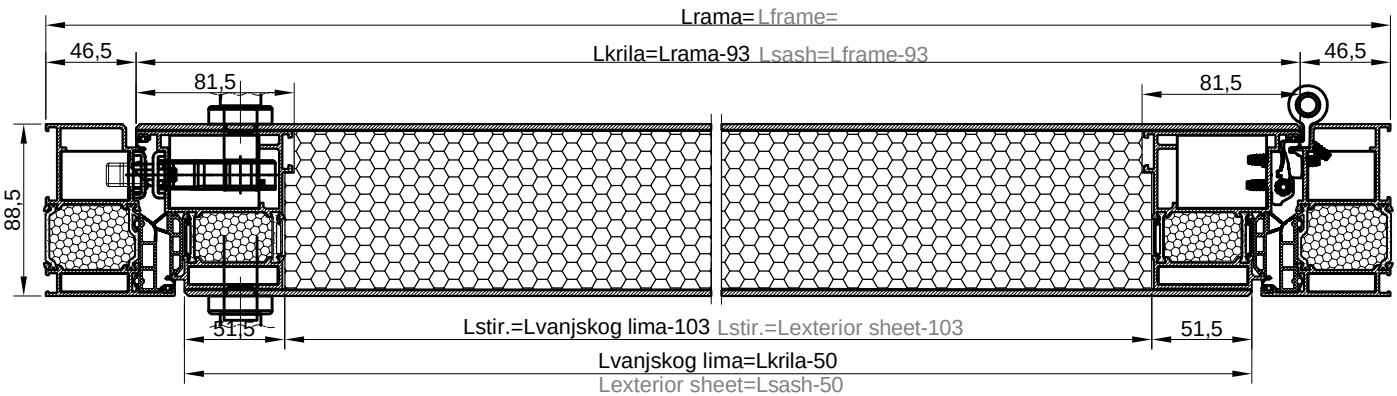


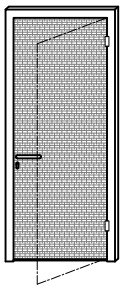




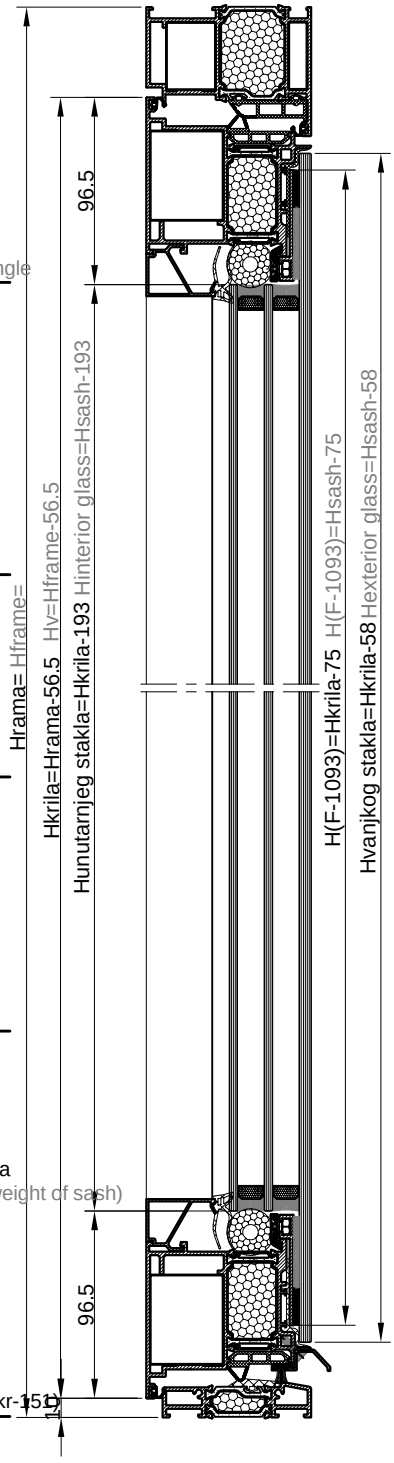
naziv name		mjera dimension	kom. pcs.	pilanje sawing angle
Ram FT-0556F	Frame FT-0556F	L	1	45-45
Ram FT-0556F	Frame FT-0556F	H	2	45-90
Krilo FT-0593F	Sash FT-0593F	L-93	2	45-45
Krilo FT-0593F	Sash FT-0593F	H-56.5	2	45-45
Prag FT-0584F	Threshold FT-0584F	L-164	1	90-90
Okapnica F-1596	Drip cap profile F-1596	Lkr-54	1	90-90
Kutna spojnica 710.143	Corner bracket 710.143		2	
Kutna spojnica 710.141	Corner bracket 710.141		2	
Kutna spojnica 710.136	Corner bracket 710.136		4	
Kutna spojnica 710.169	Corner bracket 710.169		4	
Kutna spojnica 730.001	Corner bracket 730.001		6	
Centralna brtva rama 334.005	Central gasket-frame 334.005	1L+2H		
Centralna brtva krila 334.006	Central gasket-sash 334.006	2Lkr+2Hkr		
Brtva na spoju rama i krila 321.006	Rebate gasket 321.006	3Lkr+4Hkr		
Brtva praga 331.013	Threshold gasket 331.013	L-164	1	90-90
Četkica 7x9 347.003	Brush seal 7x9 347.003	Lkr-35	1	90-90
Čep okapnice F-1596 373.057	End cap for F-1596 373.057		1 par	
Umetak na pragu 373.019	End cap for threshold 373.019		1 par	
Brava G-U Secury s MR2 (45) tri ključanja 122.015	Multipoint lock - G-U Secury MR2 (45) -122.015		1	
Prihvatna pločica 24x6x2 122.028	Striking plate 24x6x2 122.028		2	
Prihvatni lim 24x6 (lijevi) 122.029	Striking plate 24x6 (left) 122.029		1	
Trodijelna cilindrična šarka 112.011.01 - bijela	Barrel door hinge-3 part 112.011.01 - white	2 ili (3) po krilu ovisno o visini i tež.krila 2 or (3) per sash(dep. of height and weight of sash)		
Ručka za vrata 102.028	Door handle 102.028		2	
Četvrtka 102.025	Square spindle 102.025		1	
Cilindar (35-75) 122.095	Cylinder (35-75) 122.095		1	
Štitnik cilindra 122.098	Cylinder rosette 122.098		2	
Protuprovalni umetak 141.002	Security pin 141.002		2	
Vijak 433.002	Screw 433.094		3	
Vanjski lim panela 3 mm	Exterior sheet 3 mm	(Lkr.-50)x(Hkr.-39)	1	
Unutarnji lim panela 3 mm	Interior sheet 3 mm	LkrxHkr	1	
Stirodur (ispuna panela 81.4 mm)	Stirodur (panel 81.4 mm)	(Lvanj.lima-103)x(Hvanj.lima-114) (Lext.sheet-103)x(Hint.sheet-114)	1	



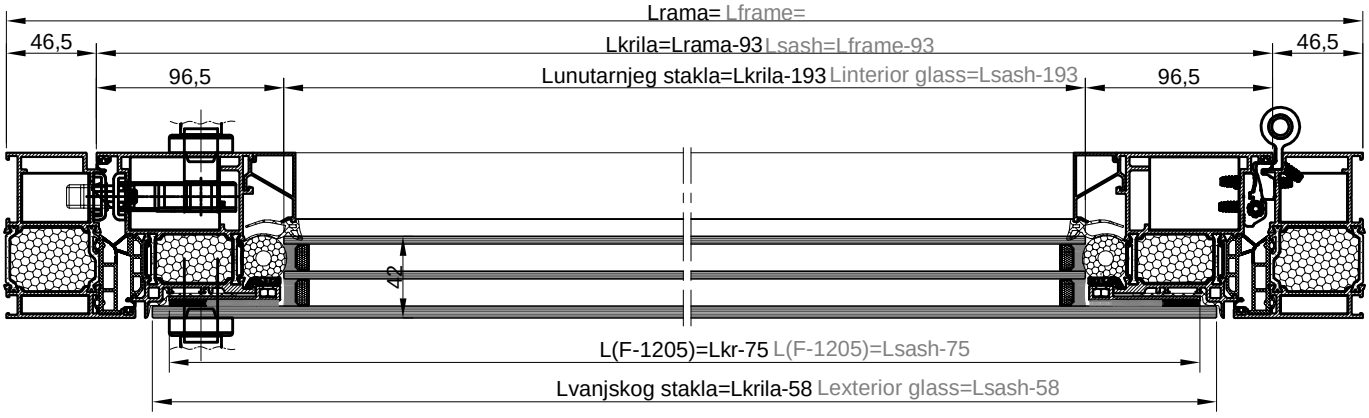




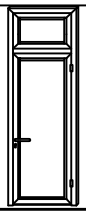
naziv name		mjera dimension	kom. pcs.	pilanje sawing angle
Ram FT-0551F	Frame FT-0551F	L	1	45-45
Ram FT-0551F	Frame FT-0551F	H	2	45-90
Krilo FT-0592F	Sash FT-0592F	L-93	2	45-45
Krilo FT-0592F	Sash FT-0592F	H-56.5	2	45-45
Prag FT-0584F	Threshold FT-0584F	L-164	1	90-90
Okapnica F-1200	Drip cap profile F-1200	Lkr-54	1	90-90
Staklo lajsna Z40-669	Glazing bead Z40-669	Lkr-161	2	90-90
Staklo lajsna Z40-669	Glazing bead Z40-669	Hkr-205	2	90-90
Al profil F-1205	Al profile F-1205	Lkr-75	2	45-45
Al profil F-1205	Al profile F-1205	Hkr-75	2	45-45
Kutna spojnica 710.143	Corner bracket 710.143		2	
Kutna spojnica 710.141	Corner bracket 710.141		2	
Kutna spojnica 710.136	Corner bracket 710.136		4	
Kutna spojnica 710.015	Corner bracket 710.015		4	
Kutna spojnica 710.203	Corner bracket 710.203		4	
Kutna spojnica 730.001	Corner bracket 730.001		6	
Kopča 141.001	Panel clamp 141.001		(2Lkr+2Hkr)/250	
Centralna brtva rama 334.005	Central gasket-frame 334.005	1L+2H		
Centralna brtva krila 334.006	Central gasket-sash 334.006	2Lkr+2Hkr		
Brtva na spoju rama i krila 321.006	Rebate gasket 321.006	3Lkr+4Hkr		
Brtva 344.003	Gasket 344.003	2(Lkr-53)+2(Hkr-53)		
Brtva prema staklu unutarnja 311.005	Glazing gasket -internal- 311.005	2Lkr+2Hkr		
Brtva praga 331.013	Threshold gasket 331.013	L-164	1	90-90
Četkica 7x9 347.003	Brush seal 7x9 347.003	Lkr-35	2	90-90
Čep okapnice F-1200 373.027	End cap for F-1200 373.027		1 par	
Umetak na pragu 373.019	End cap for threshold 373.019		1 par	
Brava G-U Secury s MR2 (45) tri ključanja 122.015	Multipoint lock - G-U Secury MR2 (45) -122.015		1	
Prihvatna pločica 24x6x2 122.028	Striking plate 24x6x2 122.028		2	
Prihvatni lim 24x6 (lijevi) 122.029	Striking plate 24x6 (left) 122.029		1	
Trodijelna cilindrična šarka 112.011.01 - bijela	Barrel door hinge-3 part 112.011.01 - white	2 ili (3) po krilu ovisno o visini i tež.krila 2 or (3) per sash(dep. of height and weight of sash)		
Ručka za vrata 102.028	Door handle 102.028		2	
Četvrtka 102.025	Square spindle 102.025		1	
Cilindar (35-75) 122.095	Cylinder (35-75) 122.095		1	
Štitnik cilindra 122.098	Cylinder rosette 122.098		2	
Protuprovalni umetak 141.002	Security pin 141.002		2	
Vijak 433.094	Screw 433.094		3	
Izolacijski umetak Ø25 340.035	Underglass insulator Ø25 340.035		4(Lkr-192)+4(Hkr-151)	
Vanjsko staklo	Exterior glass	(Lkr.-58)x(Hkr.-58)	1	
Unutarnje staklo	Interior glass	(Lkr.-193)x(Hkr.-193)	1	



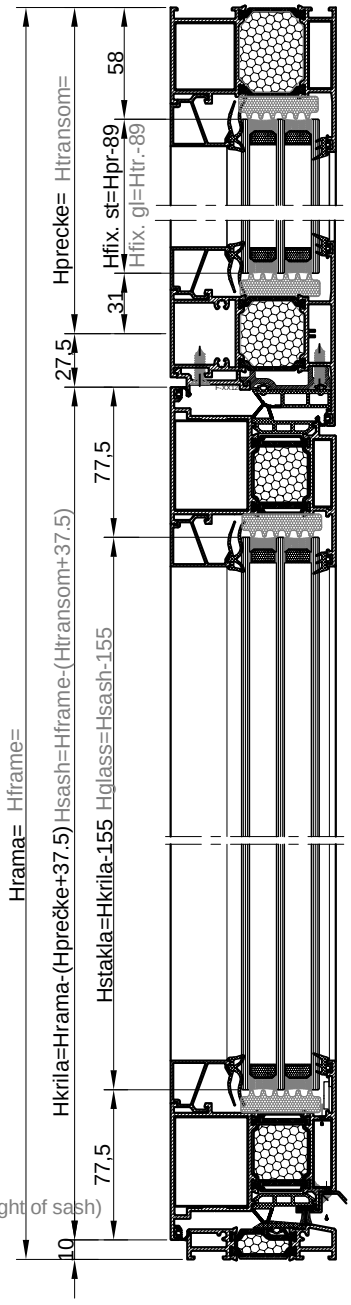
Lrama= Lframe=

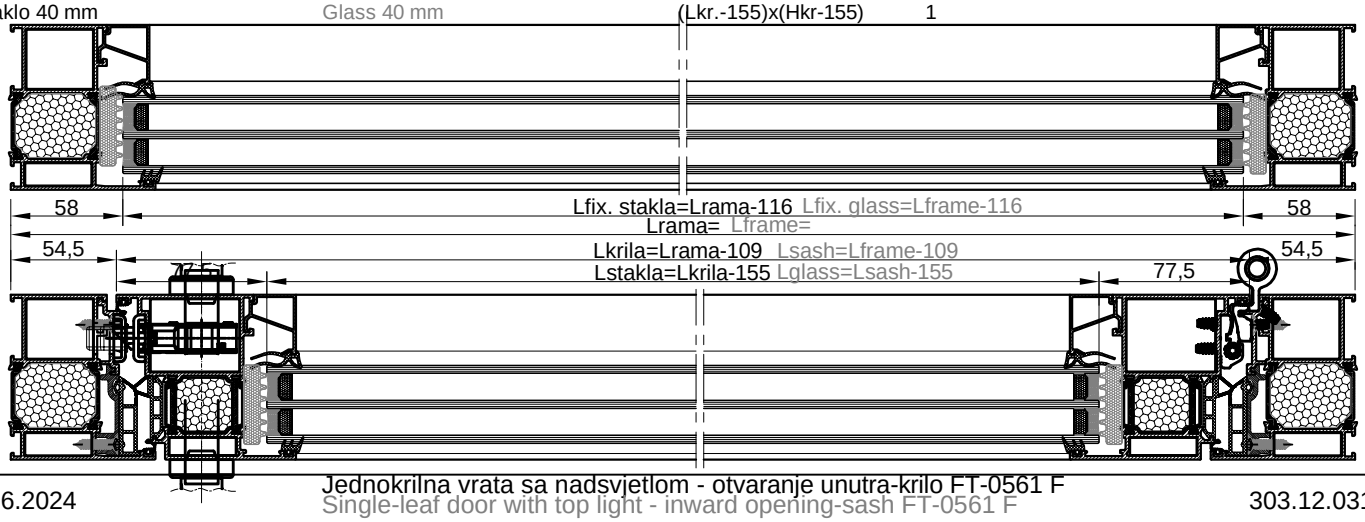


Jednokrilna vrata sa nadsvjetlom
Single-leaf door with top light

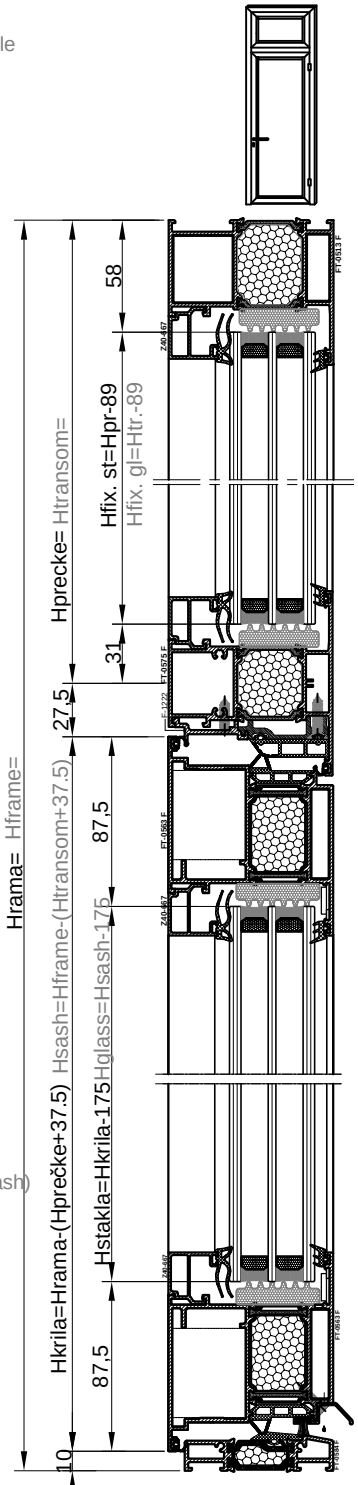


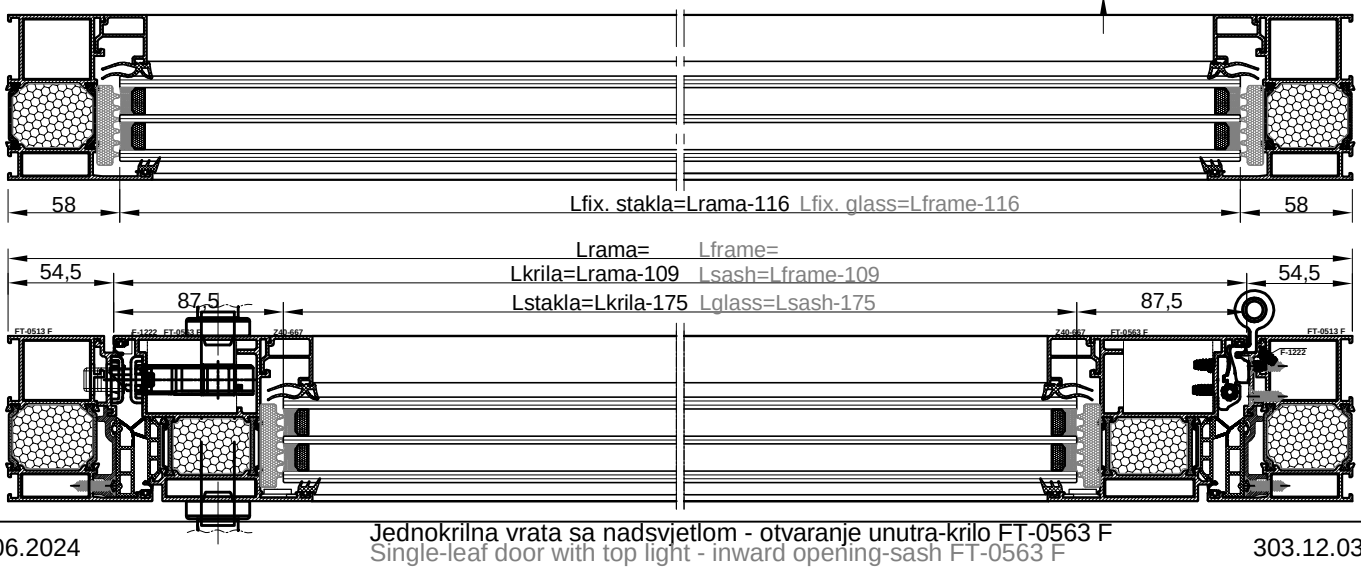
naziv name		mjera dimension	kom. pcs.	pilanje sawing angle
Ram FT-0513F	Frame FT-0513F	L	1	45-45
Ram FT-0513F	Frame FT-0513F	H	2	45-90
Krilo FT-0561F	Sash FT-0561F	L-109	2	45-45
Krilo FT-0561F	Sash FT-0561F	H-(Hpr+37.5)	2	45-45
Prag FT-0584F	Threshold FT-0584F	L-180	1	90-90
Okapnica F-1200	Drip cap profile F-1200	Lkr-54	1	90-90
Staklo lajsna Z40-668	Glazing bead Z40-668	L-99	2	90-90
Staklo lajsna Z40-668	Glazing bead Z40-668	Lkr-141	2	90-90
Staklo lajsna Z40-668	Glazing bead Z40-668	Hpr.-116	2	90-90
Staklo lajsna Z40-668	Glazing bead Z40-668	H-(Hpr.+222.5)	2	90-90
Prečka FT-0575F	Transom FT-0575F	L-87.5	1	90-90
Umetak rama F-1222	Additional profile F-1222	L-89	1	45-45
Umetak rama F-1222	Additional profile F-1222	H-(Hpr.+17.7)	2	45-90
Kutna spojnica 710.145	Corner bracket 710.145		2	
Kutna spojnica 710.141	Corner bracket 710.141		4	
Kutna spojnica 710.136	Corner bracket 710.136		4	
Kutna spojnica 731.010	Corner bracket 731.010		4	
Kutna spojnica 710.091	Corner bracket 710.091		2	
Veznik prečke 710.066	T bracket 710.066		4	
Veznik prečke 710.079	T bracket 710.079		4	
Kutna spojnica 730.001	Corner bracket 730.001		10	
Centralna brtva rama 334.005	Central gasket-frame 334.005	1L+2Hkr		
Centralna brtva krila 334.006	Central gasket-sash 334.006	2Lkr+2Hkr		
Brtva 321.006	Rebate gasket 321.006	3Lkr+4Hkr		
Brtva prema staklu vanjska 321.003	Glazing gasket -external- 321.003	2L+2Hpreč+2Lkr+2Hkr		
Brtva prema staklu unutarnja 311.004	Glazing gasket -internal- 311.004	2L+2Hpreč+2Lkr+2Hkr		
Brtva praga 331.013	Threshold gasket 331.013	L-180	1	90-90
Četkica 7x9 347.003	Brush seal 7x9 347.003	Lkr-35	1	90-90
Izolacijski umetak 340.013	Underglass insulator 340.013	2(Lkr-131)+2(Hkr-155)		
Izolacijski umetak 340.013	Underglass insulator 340.013	2(L-91.5)+2(Hpr.-89)		
Čep okapnice F-1200 373.027	End cap for F-1200 373.027		1 par	
Umetak na pragu 373.019	End cap for threshold 373.019		1 par	
Umetak na ramu 374.043	Additional pvc profile 374.043	L-88	1	45-45
Umetak na ramu 374.043	Additional pvc profile 374.043	H-(Hpr+17)	2	45-90
Brava G-U Secury MR2 (35) tri ključanja 122.016	Multipoint lock - G-U Secury MR2 (35) -122.016		1	
Prihvatna pločica 24x6x2 122.028	Striking plate 24x6x2 122.028		2	
Prihvatni lim 24x6 (lijevi) 122.081	Striking plate 24x6 (left) 122.081		1	
Trodijelna cilindrična šarka 112.011.01 - bijela	Barrel door hinge-3 part 112.011.01 - white	2 ili (3) po krilu ovisno o visini i tež.krila 2 or (3) per sash(dep. of height and weight of sash)		
Ručka za vrata 102.028	Door handle 102.028		2	
Četvrtka 102.025	Square spindle 102.025		1	
Cilindar (35-75) 122.095	Cylinder (35-75) 122.095		1	
Štitnik cilindra 122.098	Cylinder rosette 122.098		2	
Protuprovalni umetak 141.002	Security pin 141.002		2	
Staklo 40 mm	Glass 40 mm	(L-116)x(Hpr.-89)	1	
Staklo 40 mm	Glass 40 mm	(Lkr.-155)x(Hkr-155)	1	

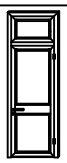




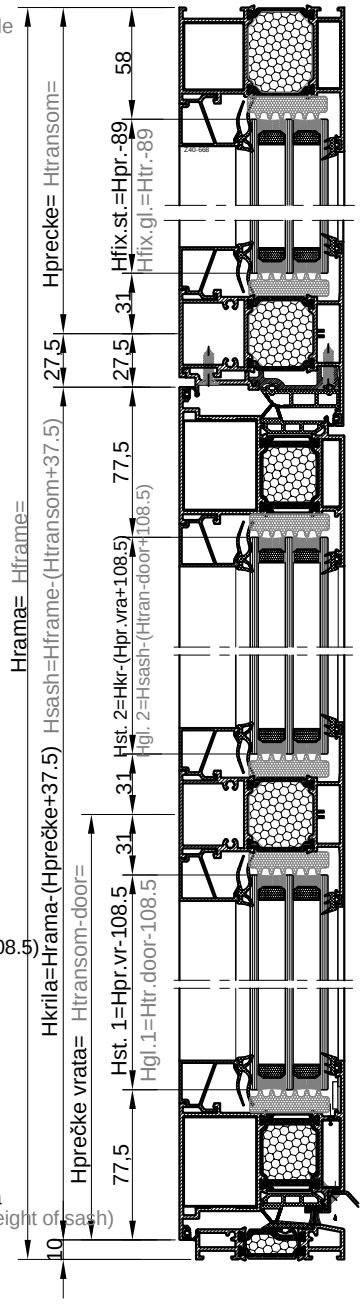
naziv name		mjera dimension	kom. pcs.	pilanje sawing angle
Ram FT-0513F	Frame FT-0513F	L	1	45-45
Ram FT-0513F	Frame FT-0513F	H	2	45-90
Krilo FT-0563F	Sash FT-0563F	L-109	2	45-45
Krilo FT-0563F	Sash FT-0563F	H-(Hpr+37.5)	2	45-45
Prag FT-0584F	Threshold FT-0584F	L-180	1	90-90
Okapnica F-1200	Drip cap profile F-1200	Lkr-54	1	90-90
Staklo lajsna Z40-667	Glazing bead Z40-667	L-99	2	90-90
Staklo lajsna Z40-667	Glazing bead Z40-667	Lkr-161	2	90-90
Staklo lajsna Z40-667	Glazing bead Z40-667	Hpr.-116	2	90-90
Staklo lajsna Z40-667	Glazing bead Z40-667	H-(Hpr.+232.5)	2	90-90
Prečka FT-0575F	Transom FT-0575F	L-87.5	1	90-90
Umetak rama F-1222	Additional profile F-1222	L-89	1	45-45
Umetak rama F-1222	Additional profile F-1222	H-(Hpr.+17.7)	2	45-90
Kutna spojnica 710.145	Corner bracket 710.145		2	
Kutna spojnica 710.169	Corner bracket 710.169		4	
Kutna spojnica 710.136	Corner bracket 710.136		4	
Kutna spojnica 731.010	Corner bracket 731.010		4	
Kutna spojnica 710.091	Corner bracket 710.091		2	
Veznik prečke 710.066	T bracket 710.066		4	
Veznik prečke 710.079	T bracket 710.079		4	
Kutna spojnica 730.001	Corner bracket 730.001		10	
Centralna brtva rama 334.005	Central gasket-frame 334.005	1L+2Hkr		
Centralna brtva krila 334.006	Central gasket-sash 334.006	2Lkr+2Hkr		
Brtva 321.006	Rebate gasket 321.006	3Lkr+4Hkr		
Brtva prema staklu vanjska 321.003	Glazing gasket -external- 321.003	2L+2Hpreč+2Lkr+2Hkr		
Brtva prema staklu unutarnja 311.004	Glazing gasket -internal- 311.004	2L+2Hpreč+2Lkr+2Hkr		
Brtva praga 331.013	Threshold gasket 331.013	L-180	1	90-90
Četkica 7x9 347.003	Brush seal 7x9 347.003	Lkr-35	1	90-90
Izolacijski umetak 340.013	Underglass insulator 340.013	2(Lkr-151)+2(Hkr-175)		
Izolacijski umetak 340.013	Underglass insulator 340.013	2(L-91.5)+2(Hpr.-89)		
Čep okapnice F-1200 373.027	End cap for F-1200 373.027		1 par	
Umetak na pragu 373.019	End cap for threshold 373.019		1 par	
Umetak na ramu 374.043	Additional pvc profile 374.043	L-88	1	45-45
Umetak na ramu 374.043	Additional pvc profile 374.043	H-(Hpr+17)	2	45-90
Brava G-U Secury MR2 (45) tri ključanja 122.015	Multipoint lock - G-U Secury MR2 (45) -122.015		1	
Prihvatna pločica 24x6x2 122.028	Striking plate 24x6x2 122.028		2	
Prihvatni lim 24x6 (lijevi) 122.081	Striking plate 24x6 (left) 122.081		1	
Trodijelna cilindrična šarka 112.011.01 - bijela	Barrel door hinge-3 part 112.011.01 - white	2 ili (3) po krilu ovisno o visini i tež.krila 2 or (3) per sash(dep. of height and weight of sash)		
Četvrtka 102.025	Square spindle 102.025		1	
Ručka za vrata 102.028	Door handle 102.028		2	
Cilindar (35-75) 122.095	Cylinder (35-75) 122.095		1	
Štitnik cilindra 122.098	Cylinder rosette 122.098		2	
Protuprovalni umetak 141.002	Security pin 141.002		2	
Staklo 44 mm -fix	Glass 44 mm -fix	(L-116)x(Hpr.-89)	1	
Staklo 44 mm	Glass 44 mm	(Lkr.-175)x(Hkr-175)	1	

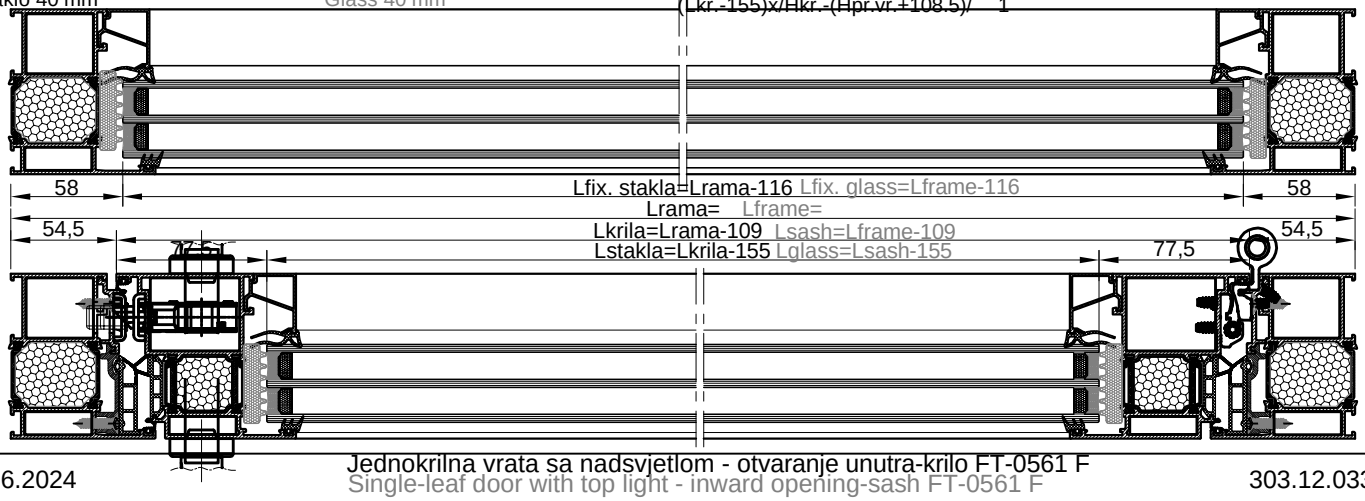




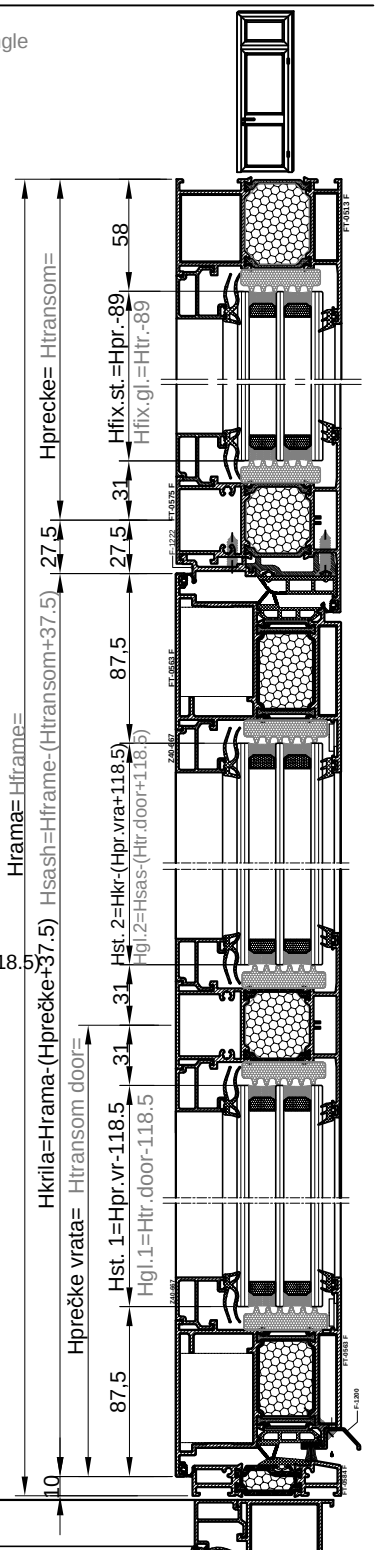


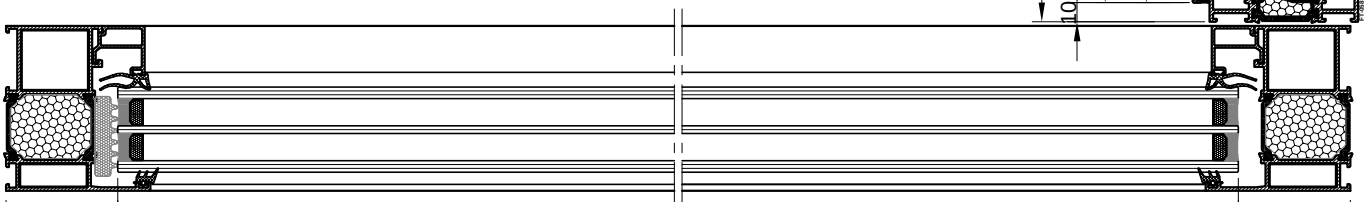
naziv name		mjera dimension	kom. pcs.	pilanje sawing angle
Ram FT-0513F	Frame FT-0513F	L	1	45-45
Ram FT-0513F	Frame FT-0513F	H	2	45-90
Krilo FT-0561F	Sash FT-0561F	L-109	2	45-45
Krilo FT-0561F	Sash FT-0561F	H-(Hpr.+37.5)	2	45-45
Prag FT-0584F	Threshold FT-0584F	L-180	1	90-90
Okapnica F-1200	Drip cap profile F-1200	Lkr-54	1	90-90
Staklo lajsna Z40-668	Glazing bead Z40-668	L-99	2	90-90
Staklo lajsna Z40-668	Glazing bead Z40-668	Lkr-141	4	90-90
Staklo lajsna Z40-668	Glazing bead Z40-668	Hpr.-116	2	90-90
Staklo lajsna Z40-668	Glazing bead Z40-668	Hpr.vr.-137	2	90-90
Staklo lajsna Z40-668	Glazing bead Z40-668	H-(Hpr.+Hpr.vr.+174.5)	2	90-90
Prečka FT-0575F	Transom FT-0575F	L-87.5	1	90-90
Prečka na krilu FT-0575F	Transom-in sash FT-0575F	Lkr-128	1	90-90
Umetak rama F-1222	Additional profile F-1222	L-89.1	1	45-45
Umetak rama F-1222	Additional profile F-1222	H-(Hpr+17.7)	2	45-90
Kutna spojnica 710.145	Corner bracket 710.145		2	
Kutna spojnica 710.141	Corner bracket 710.141		4	
Kutna spojnica 710.136	Corner bracket 710.136		4	
Kutna spojnica 731.010	Corner bracket 731.010		4	
Kutna spojnica 710.091	Corner bracket 710.091		2	
Kutna spojnica 730.001	Corner bracket 730.001		10	
Veznik prečke 710.066	T bracket 710.066		8	
Veznik prečke 710.079	T bracket 710.079		4	
Veznik prečke 710.171	T bracket 710.171		4	
Centralna brtva rama 334.005	Central gasket-frame 334.005	1L+2H		
Centralna brtva krila 334.006	Central gasket-sash 334.006	2Lkr+2Hkr		
Brtva 321.006	Rebate gasket 321.006	3Lkr+4Hkr		
Brtva prema staklu vanjska 321.003	Glazing gasket -external- 321.003	2L+2Hpreč+4Lkr+2Hkr		
Brtva prema staklu unutarnja 311.004	Glazing gasket -internal- 311.004	2L+2Hpreč+4Lkr+2Hkr		
Brtva praga 331.013	Threshold gasket 331.013	L-180	1	90-90
Četkica 7x9 347.003	Brush seal 7x9 347.003	Lkr-35	1	90-90
Izolacijski umetak 340.013	Underglass insulator 340.013	2(L-91.5)+2(Hpr.-89)		
Izolacijski umetak 340.013	Underglass insulator 340.013	4(Lkr-131)+2(Hpr.vr.-108.5)+2/Hkr-(Hpr.vr.+108.5)		
Čep okapnice F-1200 373.027	End cap for F-1200 373.027		1 par	
Umetak na pragu 373.019	End cap for threshold 373.019		1 par	
Umetak na ramu 374.043	Additional pvc profile 374.043	L-88	1	45-45
Umetak na ramu 374.043	Additional pvc profile 374.043	H-(Hpr+17)	2	45-90
Brava G-U Secury s MR2 (35) tri ključanja 122.016	Multipoint lock - G-U Secury MR2 (35) - 122.016		1	
Prihvatna pločica 24x6x2 122.028	Striking plate 24x6x2 122.028		2	
Prihvatni lim 24x6 (lijevi) 122.081	Striking plate 24x6 (left) 122.081		1	
Trodijelna cilindrična šarka 112.011.01 - bijela	Barrel door hinge-3 part 112.011.01 - white	2 ili (3) po krilu ovisno o visini i tež.krila 2 or (3) per sash(dep. of height and weight of sash)		
Ručka za vrata 102.028	Door handle 102.028		2	
Četvrtka 102.025	Sqaure spindle 102.025		1	
Cilindar (35-75) 122.095	Cylinder (35-75) 122.095		1	
Štitnik cilindra 122.098	Cylinder rosette 122.098		2	
Protuprovalni umetak 141.002	Security pin 141.002		2	
Staklo 40 mm	Glass 40 mm	(L-116)x(Hpr.-89)	1	
Staklo 40 mm	Glass 40 mm	(Lkr.-155)x(Hpr.vr.-108.5)	1	
Staklo 40 mm	Glass 40 mm	(Lkr.-155)x/Hkr.-(Hpr.vr.+108.5)/	1	
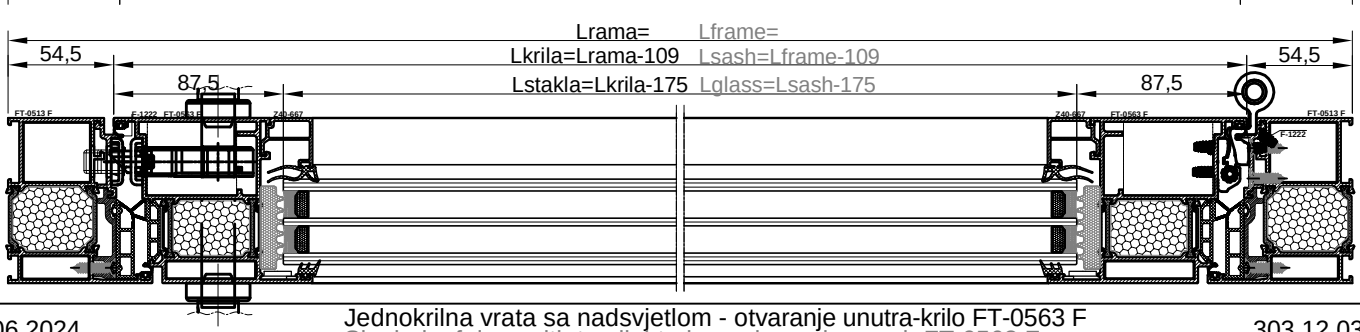


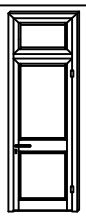


naziv name		mjera dimension	kom. pcs.	pilanje sawing angle
Ram FT-0513F	Frame FT-0513F	L	1	45-45
Ram FT-0513F	Frame FT-0513F	H	2	45-90
Krilo FT-0563F	Sash FT-0563F	L-109	2	45-45
Krilo FT-0563F	Sash FT-0563F	H-(Hpr.+37.5)	2	45-45
Prag FT-0584F	Threshold FT-0584F	L-180	1	90-90
Okapnica F-1200	Drip cap profile F-1200	Lkr-54	1	90-90
Staklo lajsna Z40-667	Glazing bead Z40-667	L-99	2	90-90
Staklo lajsna Z40-667	Glazing bead Z40-667	Lkr-161	4	90-90
Staklo lajsna Z40-667	Glazing bead Z40-667	Hpr.-116	2	90-90
Staklo lajsna Z40-667	Glazing bead Z40-667	Hpr.vr.-147	2	90-90
Staklo lajsna Z40-667	Glazing bead Z40-667	H-(Hpr.+Hpr.vr.+184.5)	2	90-90
Prečka FT-0575F	Transom FT-0575F	L-87.5	1	90-90
Prečka na krilu FT-0575F	Transom-in sash FT-0575F	Lkr-151	1	90-90
Umetak rama F-1222	Additional profile F-1222	L-89	1	45-45
Umetak rama F-1222	Additional profile F-1222	H-(Hpr+17.7)	2	45-90
Kutna spojnica 710.145	Corner bracket 710.145		2	
Kutna spojnica 710.141	Corner bracket 710.169		4	
Kutna spojnica 710.136	Corner bracket 710.136		4	
Kutna spojnica 731.010	Corner bracket 731.010		4	
Kutna spojnica 710.091	Corner bracket 710.091		2	
Kutna spojnica 730.001	Corner bracket 730.001		10	
Veznik prečke 710.066	T bracket 710.066		8	
Veznik prečke 710.079	T bracket 710.079		4	
Veznik prečke 710.171	T bracket 710.171		4	
Centralna brtva rama 334.005	Central gasket-frame 334.005	1L+2H		
Centralna brtva krila 334.006	Central gasket-sash 334.006	2Lkr+2Hkr		
Brtva 321.006	Rebate gasket 321.006	3Lkr+4Hkr		
Brtva prema staklu vanjska 321.003	Glazing gasket -external- 321.003	2L+2Hpreč+4Lkr+2Hkr		
Brtva prema staklu unutarnja 311.004	Glazing gasket -internal- 311.004	2L+2Hpreč+4Lkr+2Hkr		
Brtva praga 331.013	Threshold gasket 331.013	L-180	1	90-90
Četkica 7x9 347.003	Brush seal 7x9 347.003	Lkr-35	1	90-90
Izolacijski umetak 340.013	Underglass insulator 340.013	2(L-91.5)+2(Hpr.-89)		
Izolacijski umetak 340.013	Underglass insulator 340.013	4(Lkr-151)+2(Hpr.vr.-118.5)+2/Hkr-(Hpr.vr.+118.5)		
Čep okapnice F-1200 373.027	End cap for F-1200 373.027		1 par	
Umetak na pragu 373.019	End cap for threshold 373.019		1 par	
Umetak na ramu 374.043	Additional pvc profile 374.043	L-88	1	45-45
Umetak na ramu 374.043	Additional pvc profile 374.043	H-(Hpr+17)	2	45-90
Brava G-U Secury s MR2 (45) tri ključanja 122.015	Multipoint lock - G-U Secury MR2 (45) -122.015		1	
Prihvatna pločica 24x6x2 122.028	Striking plate 24x6x2 122.028		2	
Prihvatni lim 24x6 (lijevi) 122.081	Striking plate 24x6 (left) 122.081		1	
Trodijelna cilindrična šarka 112.011.01 - bijela	Barrel door hinge-3 part 112.011.01 - white	2 ili (3) po krilu ovisno o visini i tež.krila		
Ručka za vrata 102.028	Door handle 102.028		2	
Četvrtka 102.025	Square spindle 102.025		1	
Cilindar (35-75) 122.095	Cylinder (35-75) 122.095		1	
Štitnik cilindra 122.098	Cylinder rosette 122.098		2	
Protuprovalni umetak 141.002	Security pin 141.002		2	
Staklo 44 mm	Glass 44 mm	(L-116)x(Hpr.-89)	1	
Staklo 44 mm	Glass 44 mm	(Lkr.-175)x(Hpr.vr.-165)		1
Staklo 44 mm	Glass 44 mm	(Lkr.-175)x/Hkr.-(Hpr.vr.+118.5)/		1

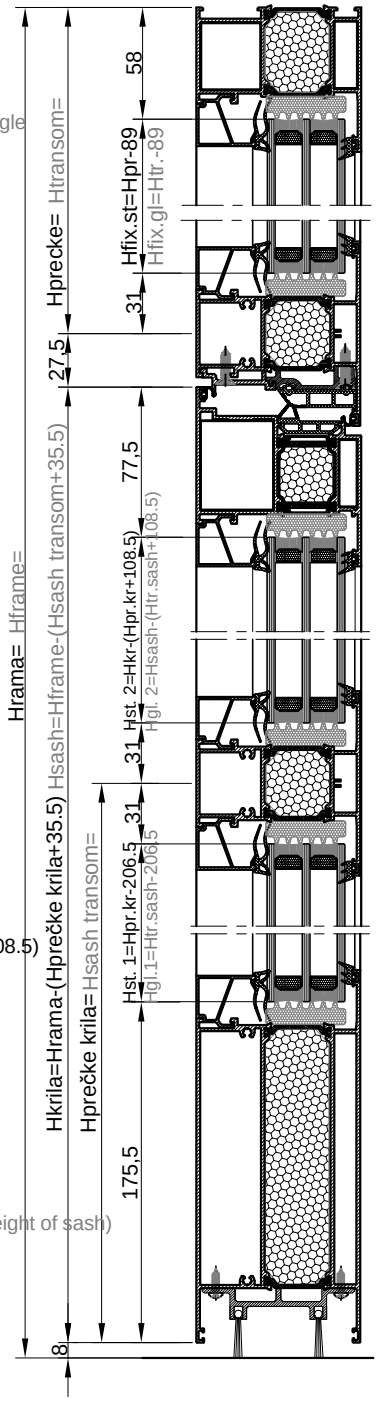


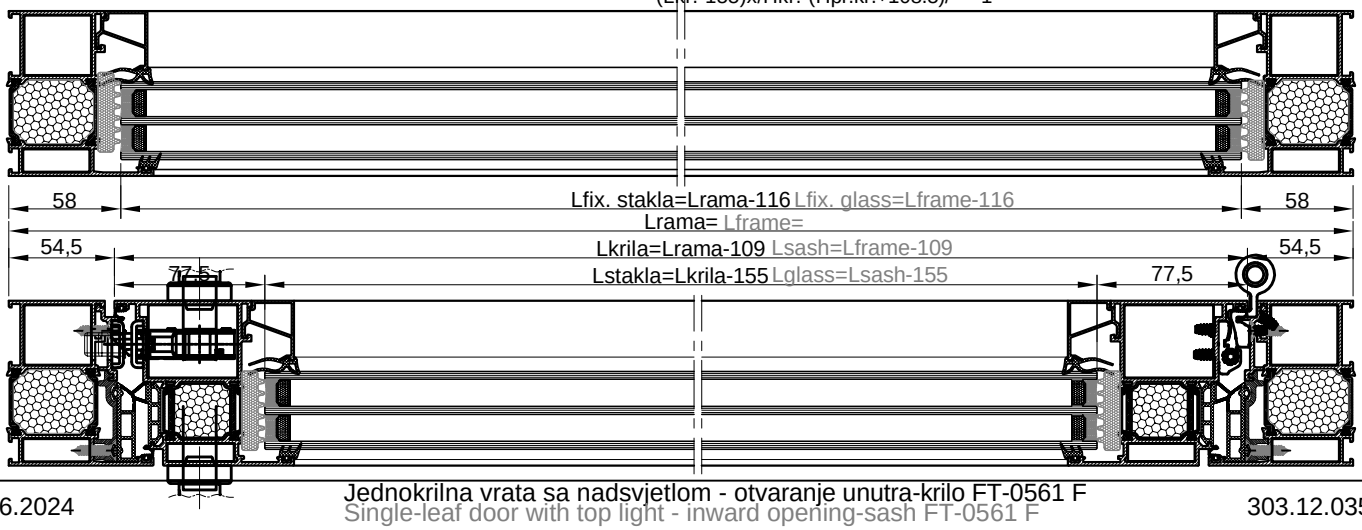


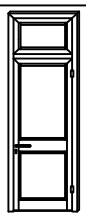




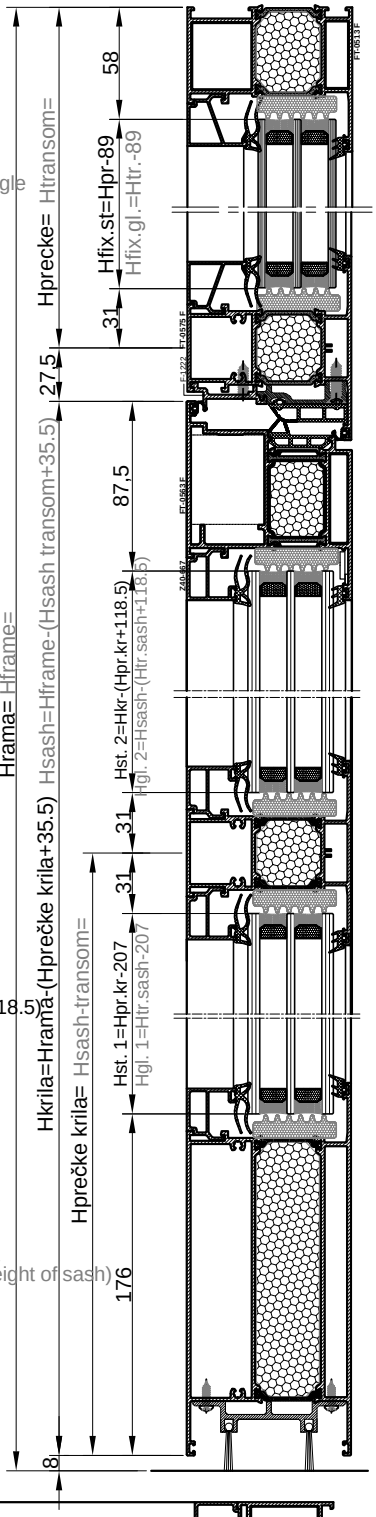
naziv name		mjera dimension	kom. pcs.	pilanje sawing angle
Ram FT-0513F	Frame FT-0513F	L	1	45-45
Ram FT-0513F	Frame FT-0513F	H	2	45-90
Krilo FT-0561F	Sash FT-0561F	L-109	1	45-45
Krilo FT-0561F	Sash FT-0561F	H-(Hpr.kr+35.5)	2	45-90
Staklo lajsna Z40-668	Glazing bead Z40-668	L-99	2	90-90
Staklo lajsna Z40-668	Glazing bead Z40-668	Lkr-141	4	90-90
Staklo lajsna Z40-668	Glazing bead Z40-668	Hpr.-116	2	90-90
Staklo lajsna Z40-668	Glazing bead Z40-668	Hpr.kr.-233.5	2	90-90
Staklo lajsna Z40-668	Glazing bead Z40-668	H-(Hpr.+Hpr.kr.+172.5)	2	90-90
Prečka FT-0575F	Transom FT-0575F	L-87.5	1	90-90
Prečka na krilu FT-0575F	Transom-in sash FT-0575F	Lkr-128	1	90-90
Umetak rama F-1222	Additional profile F-1222	L-89.1	1	45-45
Umetak rama F-1222	Additional profile F-1222	H-(Hpr+17.7)	2	45-90
Parapetna prečka FT-0576F	Transom-bottom sash prof. FT-0576F	Lkr-128	1	90-90
Kutna spojnica 710.145	Corner bracket 710.145		2	
Kutna spojnica 710.141	Corner bracket 710.141		2	
Kutna spojnica 710.136	Corner bracket 710.136		2	
Kutna spojnica 731.010	Corner bracket 731.010		2	
Kutna spojnica 710.091	Corner bracket 710.091		2	
Kutna spojnica 730.001	Corner bracket 730.001		6	
Veznik prečke 710.066	T bracket 710.066		12	
Veznik prečke 710.079	T bracket 710.079		4	
Veznik prečke 710.171	T bracket 710.171		8	
Centralna brtva rama 334.005	Central gasket-frame 334.005	1L+2H		
Centralna brtva krila 334.006	Central gasket-sash 334.006	1Lkr+2Hkr		
Brtva 321.006	Rebate gasket 321.006	2Lkr+4Hkr		
Brtva prema staklu vanjska 321.003	Glazing gasket -external- 321.003	2L+2Hpr+4Lkr+2Hkr		
Brtva prema staklu unut. 311.004	Glazing gasket -internal- 311.004	2L+2Hpr+4Lkr+2Hkr		
Izolacijski umetak 340.013	Underglass insulator 340.013	2(L-91.5)+2(Hpr.-89)		
Izolacijski umetak 340.013	Underglass insulator 340.013	4(Lkr-131)+2(Hpr.kr.-206.5)+2/Hkr-(Hpr.vr.+108.5)		
Umetak na ramu 374.043	Additional pvc profile 374.043	L-88	1	45-45
Umetak na ramu 374.043	Additional pvc profile 374.043	H-(Hpr+17)	2	45-90
Pvc umetak u parap. prečki 374.048	Pvc prof. for transom /bottom sash prof./ 374.048	Lkr-33	1	
Četkasta brtva 347.001	Brush seal 347.001		2	
Brava G-U Secury s MR2 (35) tri ključanja 122.016	Multipoint lock - G-U Secury MR2 (35) -122.016		1	
Prihvatna pločica 24x6x2 122.028	Striking plate 24x6x2 122.028		2	
Prihvatni lim 24x6 (lijevi) 122.081	Striking plate 24x6 (left) 122.081		1	
Trodijelna cilindrična šarka 112.011.01 - bijela	Barrel door hinge-3 part 112.011.01 - white	2 ili (3) po krilu ovisno o visini i tež.krila 2 or (3) per sash(dep. of height and weight of sash)		
Ručka za vrata 102.028	Door handle 102.028		2	
Četvrtka 102.025	Square spindle 102.025		1	
Cilindar (35-75) 122.095	Cylinder (35-75) 122.095		1	
Štitnik cilindra 122.098	Cylinder rosette 122.098		2	
Protuprovalni umetak 141.002	Security pin 141.002		2	
Staklo 40 mm	Glass 40 mm	(L-116)x(Hpr.-89)	1	
Staklo 40 mm	Glass 40 mm	(Lkr.-155)x(Hpr.kr.-206.5)	1	
Staklo 40 mm	Glass 40 mm	(Lkr.-155)x/Hkr.-(Hpr.kr.+108.5)/	1	

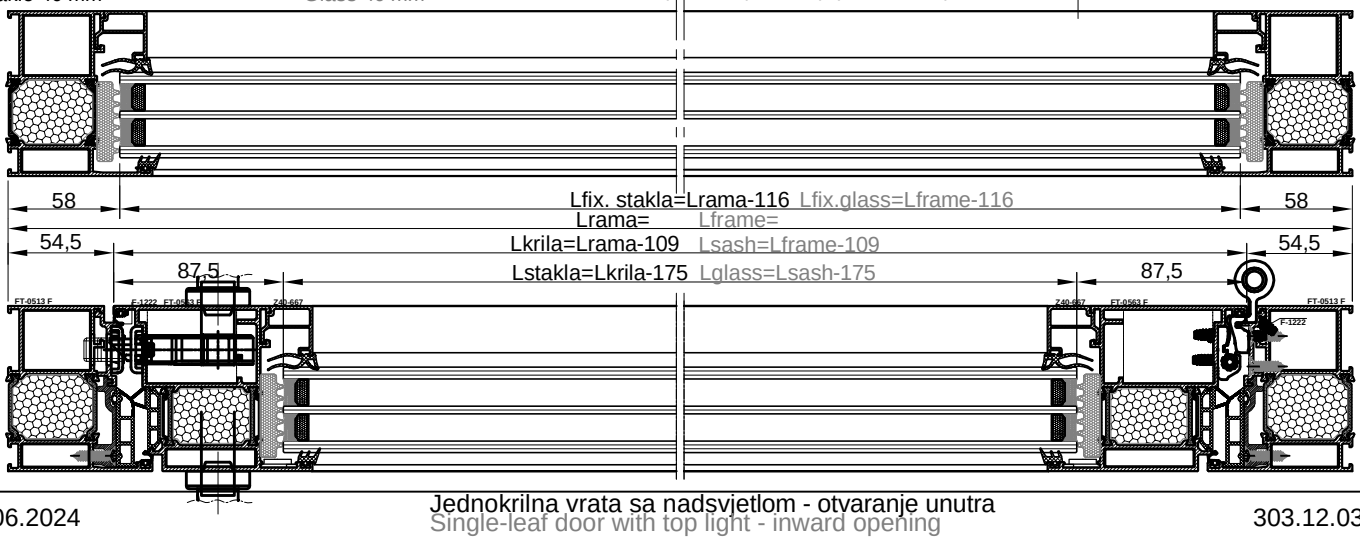


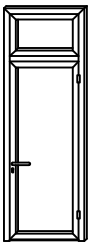




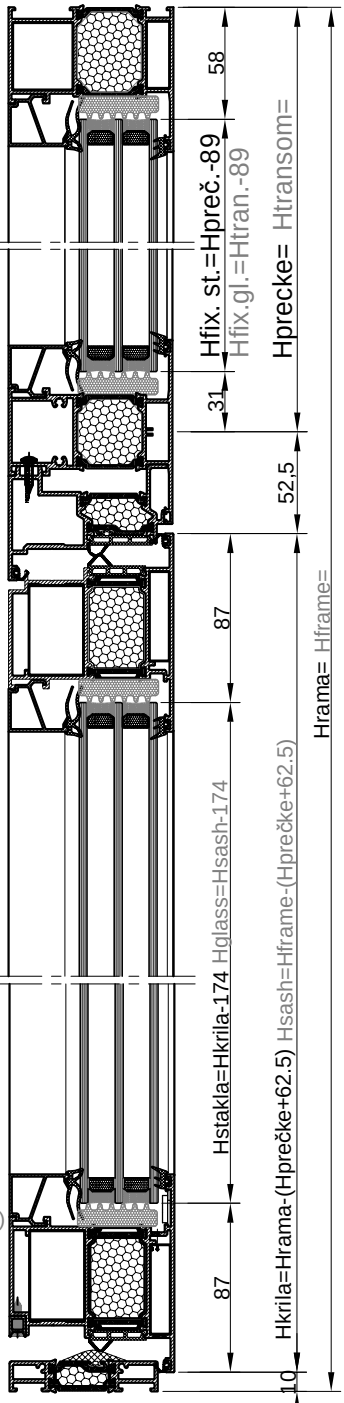
naziv name		mjera dimension	kom. pcs.	pilanje sawing angle
Ram FT-0513F	Frame FT-0513F	L	1	45-45
Ram FT-0513F	Frame FT-0513F	H	2	45-90
Krilo FT-0563F	Sash FT-0563F	L-109	1	45-45
Krilo FT-0563F	Sash FT-0563F	H-(Hpr.kr+35.5)	2	45-90
Staklo lajsna Z40-667	Glazing bead Z40-667	L-99	2	90-90
Staklo lajsna Z40-667	Glazing bead Z40-667	Lkr-161	4	90-90
Staklo lajsna Z40-667	GLazing bead Z40-667	Hpr.-116	2	90-90
Staklo lajsna Z40-667	Glazing bead Z40-667	Hpr.kr.-233.5	2	90-90
Staklo lajsna Z40-667	Glazing bead Z40-667	H-(Hpr.+Hpr.kr.+182.5)	2	90-90
Prečka FT-0575F	Transom FT-0575F	L-87.5	1	90-90
Prečka na krilu FT-0575F	Transom-in sash FT-0575F	Lkr-151	1	90-90
Umetak rama F-1222	Additional profile F-1222	L-89	1	45-45
Umetak rama F-1222	Additional profile F-1222	H-(Hpr+17.7)	2	45-90
Parapetna prečka FT-0576F	Transom-bottom sash prof. FT-0576F	Lkr-151	1	90-90
Kutna spojnica 710.145	Corner bracket 710.145		2	
Kutna spojnica 710.169	Corner bracket 710.169		2	
Kutna spojnica 710.136	Corner bracket 710.136		2	
Kutna spojnica 731.010	Corner bracket 731.010		2	
Kutna spojnica 710.091	Corner bracket 710.091		2	
Kutna spojnica 730.001	Corner bracket 730.001		6	
Veznik prečke 710.066	T bracket 710.066		12	
Veznik prečke 710.079	T bracket 710.079		4	
Veznik prečke 710.171	T bracket 710.171		8	
Centralna brtva rama 334.005	Central gasket-frame 334.005	1L+2H		
Centralna brtva krila 334.006	Central gasket-sash 334.006	1Lkr+2Hkr		
Brtva 321.006	Rebate gasket 321.006	2Lkr+4Hkr		
Brtva prema staklu vanjska 321.003	Glazing gasket -external- 321.003	2L+2Hpr+4Lkr+2Hkr		
Brtva prema staklu unut. 311.004	Glazing gasket -internal- 311.004	2L+2Hpr+4Lkr+2Hkr		
Izolacijski umetak 340.013	Underglass insulator 340.013	2(L-91.5)+2(Hpr.-89)		
Izolacijski umetak 340.013	Underglass insulator 340.013	4(Lkr-151)+2(Hpr.kr.-216.5)+2/Hkr-(Hpr.vr.+118.5)		
Umetak na ramu 374.043	Additional pvc profile 374.043	L-88	1	45-45
Umetak na ramu 374.043	Additional pvc profile 374.043	H-(Hpr+17)	2	45-90
Pvc umetak u parap. prečki 374.048	Pvc prof. for transom /bottom sash prof./ 374.048	Lkr-33	1	
Četkasta brtva 347.001	Brush seal 347.001		2	
Brava G-U Secury s MR2 (45) tri ključanja 122.015	Multipoint lock - G-U Secury MR2 (45) -122.015		1	
Prihvatna pločica 24x6x2 122.028	Striking plate 24x6x2 122.028		2	
Prihvatni lim 24x6 (lijevi) 122.081	Striking plate 24x6 (left) 122.081		1	
Trodijelna cilindrična šarka 112.011.01 - bijela	Barrel door hinge-3 part 112.011.01 - white	2 ili (3) po krilu ovisno o visini i tež.krila 2 or (3) per sash(dep. of height and weight of sash)		
Ručka za vrata 102.028	Door handle 102.028		2	
Četvrtka 102.025	Square spindle 102.025		1	
Cilindar (35-75) 122.095	Cylinder (35-75) 122.095		1	
Štitnik cilindra 122.098	Cylinder rosette 122.098		2	
Protuprovalni umetak 141.002	Security pin 141.002		2	
Staklo 40 mm	Glass 40 mm	(L-116)x(Hpr.-89)	1	
Staklo 40 mm	Glass 40 mm	(Lkr.-175)x(Hpr.kr.-207)	1	
Staklo 40 mm	Glass 40 mm	(Lkr.-175)x/Hkr.-(Hpr.kr.+118.5)/	1	

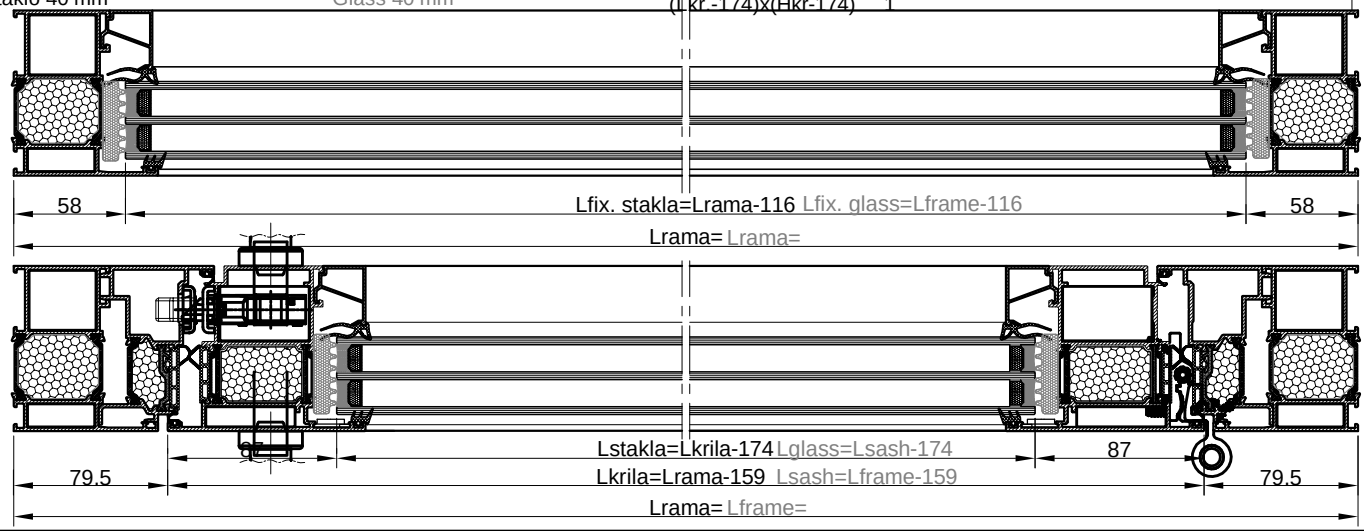


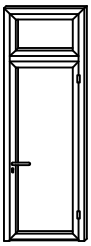




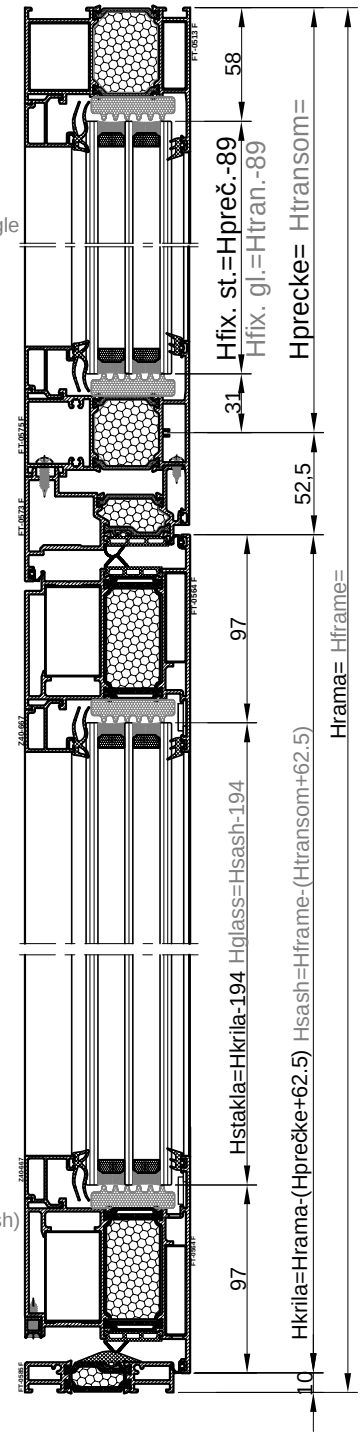
naziv name		mjera dimension	kom. pcs.	pilanje sawing angle
Ram FT-0513F	Frame FT-0513F	L	1	45-45
Ram FT-0513F	Frame FT-0513F	H	2	45-90
Krilo FT-0562F	Sash FT-0562F	L-159	2	45-45
Krilo FT-0562F	Sash FT-0562F	H-(Hpr.+62.5)	2	45-45
Umetak F-1188	Additional profile F-1188	Lkr-58	1	90-90
Prečka FT-0575	Transom FT-0575	L-87.5	1	90-90
Staklo lajsna Z40-668	Glazing bead Z40-668	L-99	2	90-90
Staklo lajsna Z40-668	Glazing bead Z40-668	Lkr-160	2	90-90
Staklo lajsna Z40-668	Glazing bead Z40-668	Hpreč.-116	2	90-90
Staklo lajsna Z40-668	Glazing bead Z40-668	Hkr-204	2	90-90
Prag FT-0585F	Threshold FT-0585F	L-217	1	90-90
Umetak FT-0573F	Additional profile FT-0573F	L-87.5	1	45-45
Umetak FT-0573F	Additional profile FT-0573F	H-(Hpreč.+17)	2	45-90
Kutna spojnica 710.145	Corner bracket 710.145		2	
Kutna spojnica 710.133	Corner bracket 710.133		4	
Kutna spojnica 710.091	Corner bracket 710.091		2	
Kutna spojnica 710.134	Corner bracket 710.134		4	
Kutna spojnica 731.010	Corner bracket 731.010		4	
Kutna spojnica 730.001	Corner bracket 730.001		12	
Veznik prečke 710.066	T bracket 710.066		4	
Veznik prečke 710.079	T bracket 710.079		4	
Centralna brtva rama 334.009	Central gasket-frame 334.009	1Lkr+2Hkr		
Centralna brtva krila 334.010	Central gasket-sash 334.010	2Lkr+2Hkr		
Brtva prema staklu vanjska 321.003	Glazing gasket -external- 321.003	2Lkr+2Hkr+2Lrama+2Hpreč		
Brtva prema staklu unutarnja 311.004	Glazing gasket -internal- 311.004	2Lkr+2Hkr+2Lrama+2Hpreč		
Brtva na spoju rama i krila 321.006	Rebate gasket 321.006	3Lkr+4Hkr		
Brtva praga 331.012	Threshold gasket 331.012	L-217	1	90-90
Izolacijski umetak 340.013	Underglass insulator 340.013	2(Lkr-150)+2(Hkr-174)		
Izolacijski umetak 340.013	Underglass insulator 340.013	2(L-91.5)+2(Hpr.-89)		
Umetak na pragu 373.020	End cap for threshold 373.020		1 par	
Brava G-U Secury s MR2 (35) tri ključanja 122.016	Multipoint lock - G-U Secury MR2 (35) -122.016		1	
Prihvatna pločica 24x6x2 122.028	Striking plate 24x6x2 122.028		2	
Prihvatni lim 24x6 (desni) 122.029	Striking plate 24x6 (right) 122.029		1	
Trodijelna cilindrična šarka 112.012.01 - bijela	Barrel door hinge-3 part 112.012.01 - white	2 ili (3) po krilu ovisno o visini i tež.krila 2 or (3) per sash(dep. of height and weight of sash)		
Ručka za vrata 102.028	Door handle 102.028		2	
Četvrtka 102.025	Square spindle 102.025		1	
Cilindar (35-75) 122.095	Cylinder (35-75) 122.095		1	
Štitnik cilindra 122.098	Cylinder rosette 122.098		2	
Protuprovalni umetak 141.002	Security pin 141.002		2	
Staklo 40 mm	Glass 40 mm	(L-116)x(Hpr.-89)	1	
Staklo 40 mm	Glass 40 mm	(Lkr.-174)x(Hkr-174)	1	

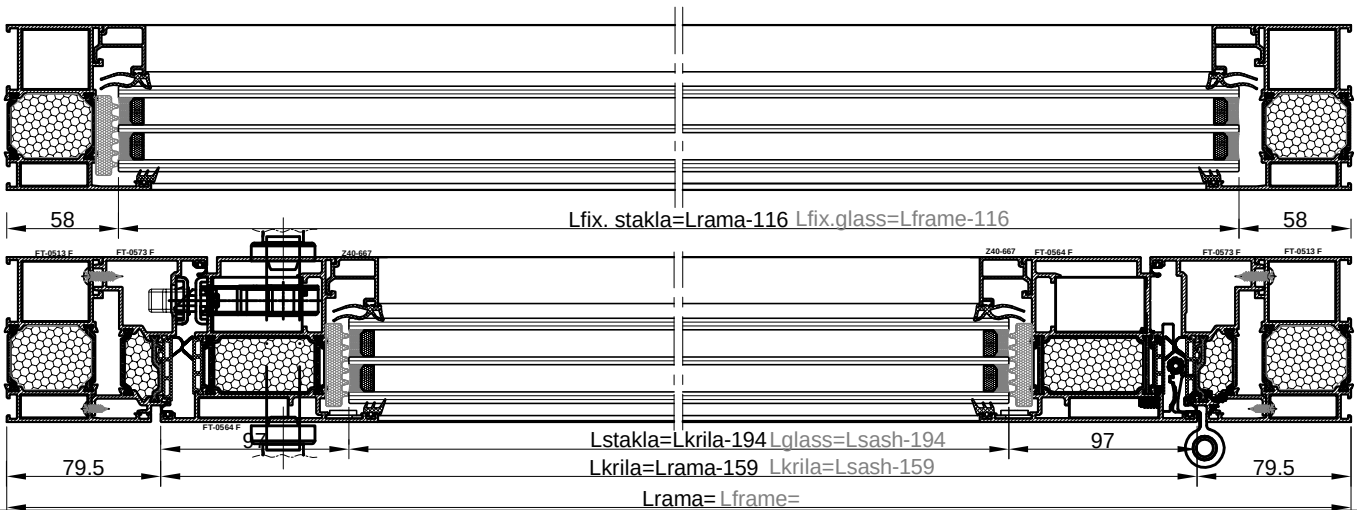


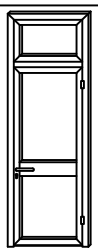




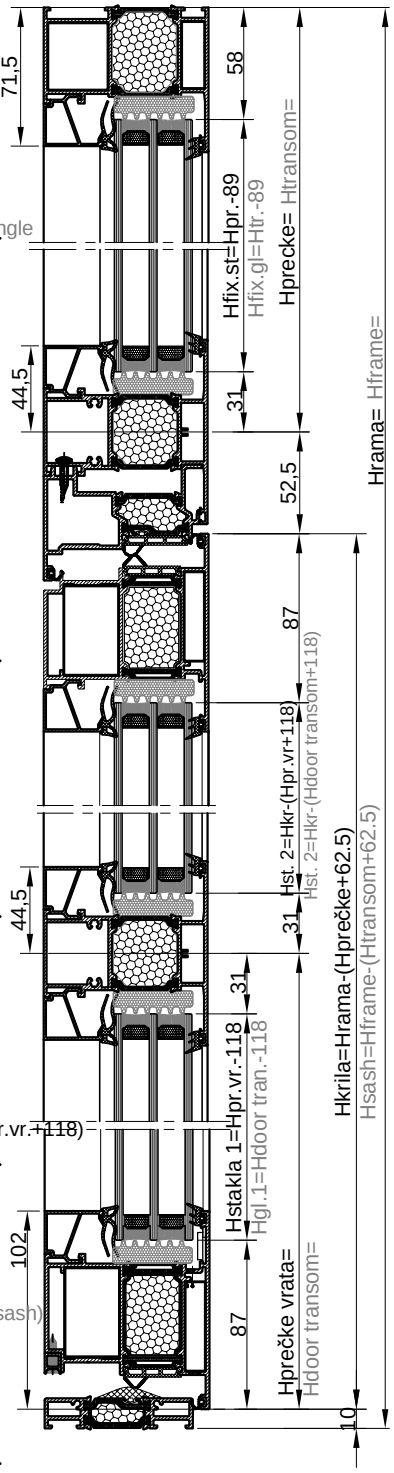
naziv name		mjera dimension	kom. pcs.	pilanje sawing angle
Ram FT-0513F	Frame FT-0513F	L	1	45-45
Ram FT-0513F	Frame FT-0513F	H	2	45-90
Krilo FT-0564F	Sash FT-0564F	L-159	2	45-45
Krilo FT-0564F	Sash FT-0564F	H-(Hpr.+62.5)	2	45-45
Umetak F-1188	Additional profile F-1188	Lkr-58	1	90-90
Prečka FT-0575F	Transom FT-0575F	L-87.5	1	90-90
Staklo lajsna Z40-667	Glazing bead Z40-667	L-99	2	90-90
Staklo lajsna Z40-667	Glazing bead Z40-667	Lkr-180	2	90-90
Staklo lajsna Z40-667	Glazing bead Z40-667	Hpreč.-116	2	90-90
Staklo lajsna Z40-667	Glazing bead Z40-667	Hkr-224	2	90-90
Prag FT-0585F	Threshold FT-0585F	L-217	1	90-90
Umetak FT-0573F	Additional profile FT-0573F	L-87.5	1	45-45
Umetak FT-0573F	Additional profile FT-0573F	H-(Hpreč.+17)	2	45-90
Kutna spojnica 710.145	Corner bracket 710.145		2	
Kutna spojnica 710.133	Corner bracket 710.133		4	
Kutna spojnica 710.091	Corner bracket 710.091		2	
Kutna spojnica 710.134	Corner bracket 710.134		4	
Kutna spojnica 731.010	Corner bracket 731.010		4	
Kutna spojnica 730.001	Corner bracket 730.001		6	
Veznik prečke 710.066	T bracket 710.066		4	
Veznik prečke 710.079	T bracket 710.079		4	
Centralna brtva rama 334.009	Central gasket-frame 334.009	1Lkr+2Hkr		
Centralna brtva krila 334.010	Central gasket-sash 334.010	2Lkr+2Hkr		
Brtva prema staklu vanjska 321.003	Glazing gasket -external- 321.003	2Lkr+2Hkr+2Lrama+2Hpreč		
Brtva prema staklu unutarnja 311.004	Glazing gasket -internal- 311.004	2Lkr+2Hkr+2Lrama+2Hpreč		
Brtva na spoju rama i krila 321.006	Rebate gasket 321.006	3Lkr+4Hkr		
Brtva praga 331.012	Threshold gasket 331.012	L-217	1	90-90
Izolacijski umetak 340.013	Underglass insulator 340.013	2(Lkr-170)+2(Hkr-194)		
Izolacijski umetak 340.013	Underglass insulator 340.013	2(L-91.5)+2(Hpr.-89)		
Umetak na pragu 373.020	End cap for threshold 373.020		1 par	
Brava G-U Secury s MR2 (45) tri ključanja 122.015	Multipoint lock - G-U Secury MR2 (45) -122.015		1	
Prihvatna pločica 24x6x2 122.028	Striking plate 24x6x2 122.028		2	
Prihvatni lim 24x6 (desni) 122.029	Striking plate 24x6 (right) 122.029		1	
Trodijelna cilindrična šarka 112.012.01 - bijela	Barrel door hinge-3 part 112.012.01 - white	2 ili (3) po krilu ovisno o visini i tež.krila 2 or (3) per sash(dep. of height and weight of sash)		
Ručka za vrata 102.028	Door handle 102.028		2	
Četvrtka 102.025	Square spindle 102.025		1	
Cilindar (35-75) 122.095	Cylinder (35-75) 122.095		1	
Štitnik cilindra 122.098	Cylinder rosette 122.098		2	
Protuprovalni umetak 141.002	Security pin 141.002		2	

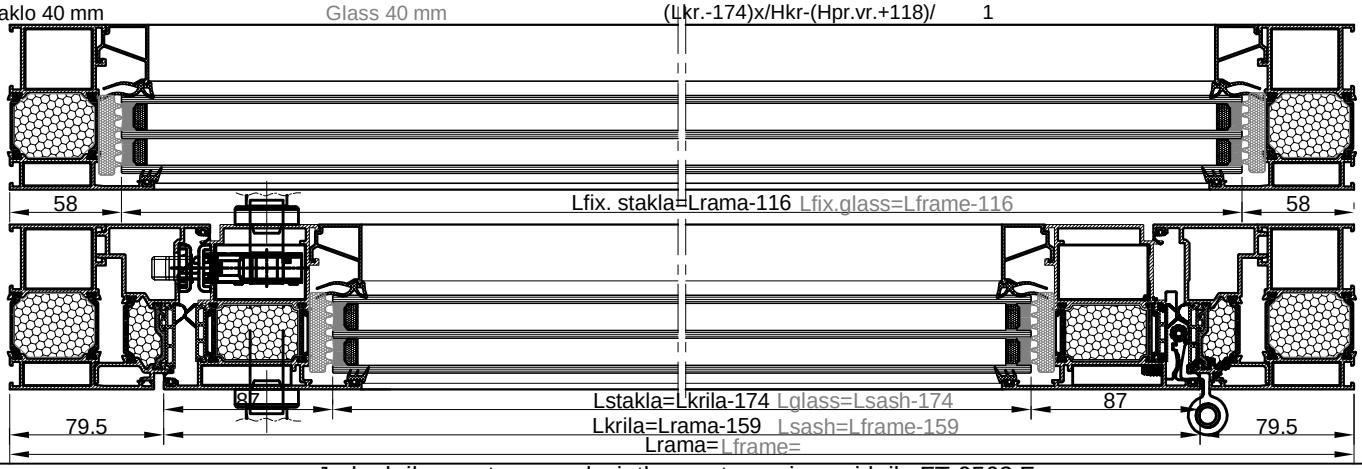


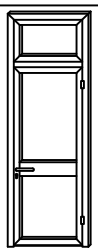




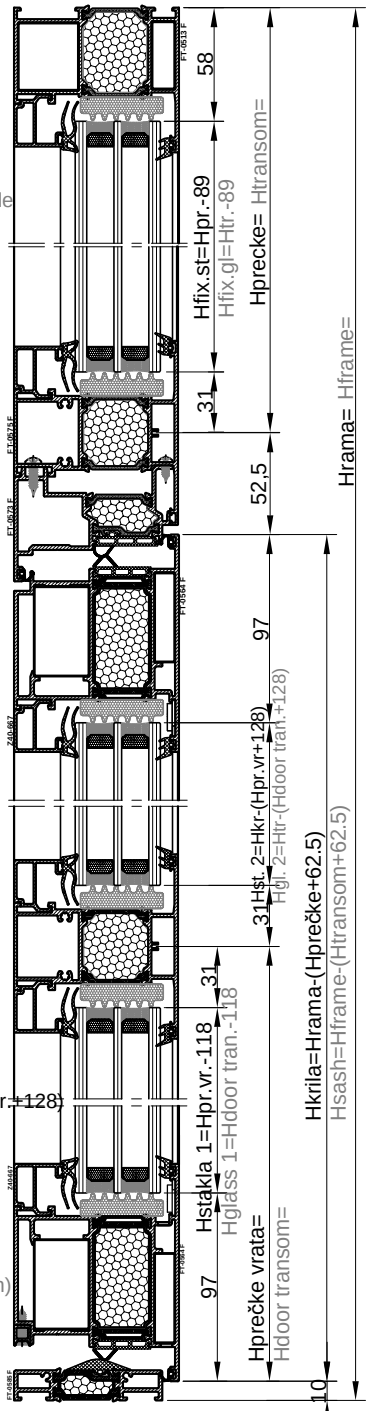
naziv name		mjera dimension	kom. pcs.	pilanje sawing angle
Ram FT-0513F	Frame FT-0513F	L	1	45-45
Ram FT-0513F	Frame FT-0513F	H	2	45-90
Krilo FT-0562F	Sash FT-0562F	L-159	2	45-45
Krilo FT-0562F	Sash FT-0562F	H-(Hpr.+62.5)	2	45-45
Umetak F-1188	Additional profile F-1188	Lkr-58	1	90-90
Prečka FT-0575F	Transom FT-0575F	L-87.5	1	90-90
Prečka na krilu FT-0575F	Transom-in sash FT-0575F	L-147	1	90-90
Staklo lajsna Z40-668	Glazing bead Z40-668	L-99	2	90-90
Staklo lajsna Z40-668	Glazing bead Z40-668	Lkr-160	4	90-90
Staklo lajsna Z40-668	Glazing bead Z40-668	Hpreč.-116	2	90-90
Staklo lajsna Z40-668	Glazing bead Z40-668	Hpr.vr.-146.5	2	90-90
Staklo lajsna Z40-668	Glazing bead Z40-668	H-(Hpr.+Hpr.vr+209)	2	90-90
Prag FT-0585F	Threshold FT-0585 F	L-217	1	90-90
Umetak FT-0573F	Additional profile FT-0573F	L-87.5	1	45-45
Umetak FT-0573F	Additional profile FT-0573F	H-(Hpr.+17)	2	45-90
Kutna spojnica 710.145	Corner bracket 710.145		2	
Kutna spojnica 710.133	Corner bracket 710.133		4	
Kutna spojnica 710.091	Corner bracket 710.091		2	
Kutna spojnica 710.134	Corner bracket 710.134		4	
Kutna spojnica 731.010	Corner bracket 731.010		4	
Kutna spojnica 730.001	Corner bracket 730.001		12	
Veznik prečke 710.066	T bracket 710.066		8	
Veznik prečke 710.079	T bracket 710.079		4	
Veznik prečke 710.171	T bracket 710.171		4	
Centralna brtva rama 334.009	Central gasket-frame 334.009	1Lkr+2Hkr		
Centralna brtva krila 334.010	Central gasket-sash 334.010	2Lkr+2Hkr		
Brtva prema staklu vanjska 321.003	Glazing gasket -external- 321.003	2Lrama+4Lkr+2Hprečke+2Hkr		
Brtva prema staklu unutarnja 311.004	Glazing gasket -internal- 311.004	2Lrama+4Lkr+2Hprečke+2Hkr		
Brtva na spoju rama i krila 321.006	Rebate gasket 321.006	3Lkr+4Hkr		
Brtva praga 331.012	Threshold gasket 331.012	L-217	1	90-90
Izolacijski umetak 340.013	Underglass insulator 340.013	2(L-91.5)+2(Hpr.-89)		
Izolacijski umetak 340.013	Underglass insulator 340.013	4(Lkr-150)+2(Hpr.vr.-118)+2/Hkr-(Hpr.vr.+118)		
Umetak na pragu 373.020	End cap for threshold 373.020		1 par	
Brava G-U Secury s MR2 (35) tri ključanja 122.016	Multipoint lock - G-U Secury MR2 (35) -122.016		1	
Prihvatna pločica 24x6x2 122.028	Striking plate 24x6x2 122.028		2	
Prihvatni lim 24x6 (desni) 122.029	Striking plate 24x6 (right) 122.029		1	
Trodijelna cilindrična šarka 112.012.01 - bijela	Barrel door hinge-3 part 112.012.01 - white	2 ili (3) po krilu ovisno o visini i tež.krila 2 or (3) per sash(dep. of height and weight of sash)		
Ručka za vrata 102.028	Door handle 102.028		2	
Četvrtka 102.025	Square spindle 102.025		1	
Cilindar (35-75) 122.095	Cylinder (35-75) 122.095		1	
Štitnik cilindra 122.098	Cylinder rosette 122.098		2	
Protuprovalni umetak 141.002	Security pin 141.002		2	
Staklo 40 mm	Glass 40 mm	(L-116)x(Hpr.-89)		1
Staklo 40 mm	Glass 40 mm	(Lkr.-174)x(Hpr.vr.-118)		1
Staklo 40 mm	Glass 40 mm	(Lkr.-174)x/Hkr-(Hpr.vr.+118)/		1
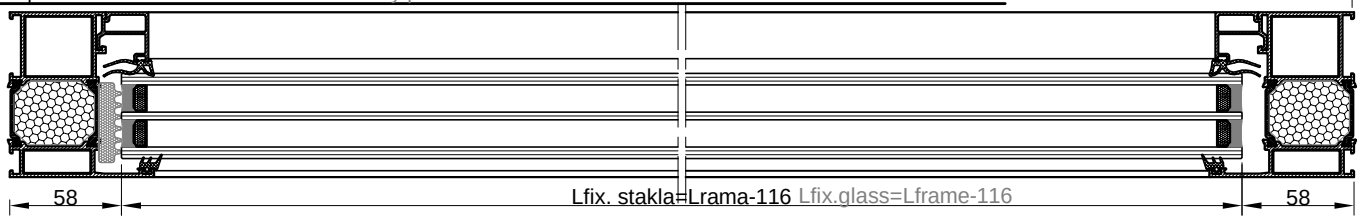




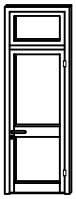


naziv name		mjera dimension	kom. pcs.	pilanje sawing angle
Ram FT-0513F	Frame FT-0513F	L	1	45-45
Ram FT-0513F	Frame FT-0513F	H	2	45-90
Krilo FT-0564F	Sash FT-0564F	L-159	2	45-45
Krilo FT-0564F	Sash FT-0564F	H-(Hpr.+62.5)	2	45-45
Umetak F-1188	Additional profile F-1188	Lkr-58	1	90-90
Prečka FT-0575F	Transom FT-0575F	L-87.5	1	90-90
Prečka na krilu FT-0575F	Transom-in sash FT-0575F	L-167	1	90-90
Staklo lajsna Z40-667	Glazing bead Z40-667	L-99	2	90-90
Staklo lajsna Z40-667	Glazing bead Z40-667	Lkr-180	4	90-90
Staklo lajsna Z40-667	Glazing bead Z40-667	Hpreč.-116	2	90-90
Staklo lajsna Z40-667	Glazing bead Z40-667	Hpr.vr.-156.5	2	90-90
Staklo lajsna Z40-667	Glazing bead Z40-667	H-(Hpr.+Hpr.vr+219)	2	90-90
Prag FT-0585F	Threshold FT-0585F	L-217	1	90-90
Umetak FT-0573F	Additional profile FT-0573F	L-87.5	1	45-45
Umetak FT-0573F	Additional profile FT-0573F	H-(Hpr.+17)	2	45-90
Kutna spojnica 710.145	Corner bracket 710.145		2	
Kutna spojnica 710.133	Corner bracket 710.133		4	
Kutna spojnica 710.091	Corner bracket 710.091		2	
Kutna spojnica 710.134	Corner bracket 710.134		4	
Kutna spojnica 731.010	Corner bracket 731.010		4	
Kutna spojnica 730.001	Corner bracket 730.001		6	
Veznik prečke 710.066	T bracket 710.066		8	
Veznik prečke 710.079	T bracket 710.079		4	
Veznik prečke 710.171	T bracket 710.171		4	
Centralna brtva rama 334.009	Central gasket-frame 334.009	1Lkr+2Hkr		
Centralna brtva krila 334.010	Central gasket-sash 334.010	2Lkr+2Hkr		
Brtva prema staklu vanjska 321.003	Glazing gasket -external- 321.003	2Lrama+4Lkr+2Hprečke+2Hkr		
Brtva prema staklu unutarnja 311.004	Glazing gasket -internal- 311.004	2Lrama+4Lkr+2Hprečke+2Hkr		
Brtva na spoju rama i krila 321.006	Rebate gasket 321.006	3Lkr+4Hkr		
Brtva praga 331.012	Threshold gasket 331.012	L-217	1	90-90
Izolacijski umetak 340.013	Underglass insulator 340.013	2(L-91.5)+2(Hpr.-89)		
Izolacijski umetak 340.013	Underglass insulator 340.013	4(Lkr-170)+2(Hpr.vr.-128)+2/Hkr-(Hpr.vr.+128)		
Umetak na pragu 373.020	End cap for threshold 373.020		1 par	
Brava G-U Secury s MR2 (45) tri ključanja 122.015	Multipoint lock - G-U Secury MR2 (45) -122.015		1	
Prihvatna pločica 24x6x2 122.028	Striking plate 24x6x2 122.028		2	
Prihvatni lim 24x6 (desni) 122.029	Striking plate 24x6 (right) 122.029		1	
Trodijelna cilindrična šarka 112.012.01 - bijela	Barrel door hinge-3 part 112.012.01 - white	2 ili (3) po krilu ovisno o visini i tež.krila 2 or (3) per sash(dep. of height and weight of sash)		
Ručka za vrata 102.028	Door handle 102.028		2	
Četvrtka 102.025	Square spindle 102.025		1	
Cilindar (35-75) 122.095	Cylinder (35-75) 122.095		1	
Štitnik cilindra 122.098	Cylinder rosette 122.098		2	
Protuprovalni umetak 141.002	Security pin 141.002		2	

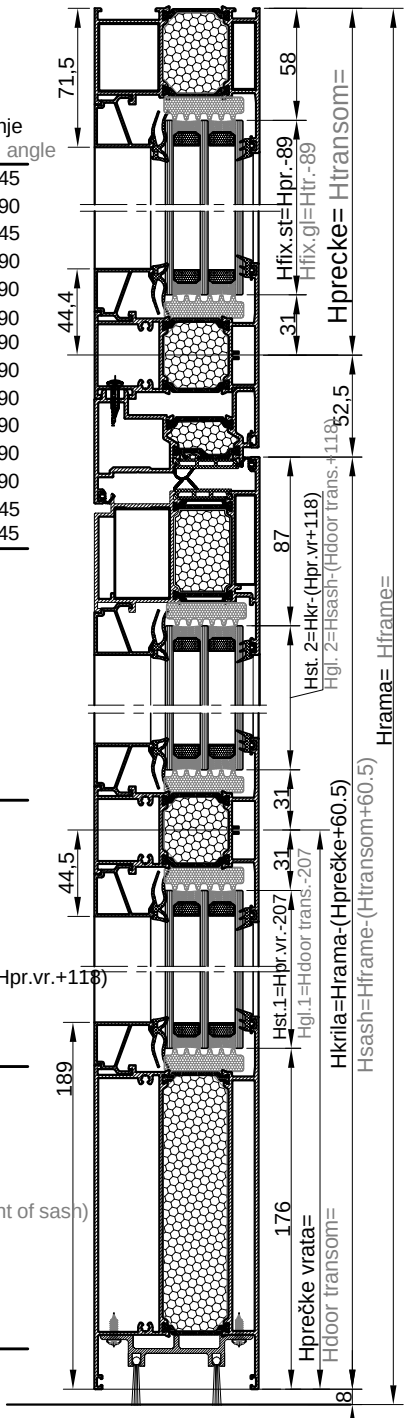


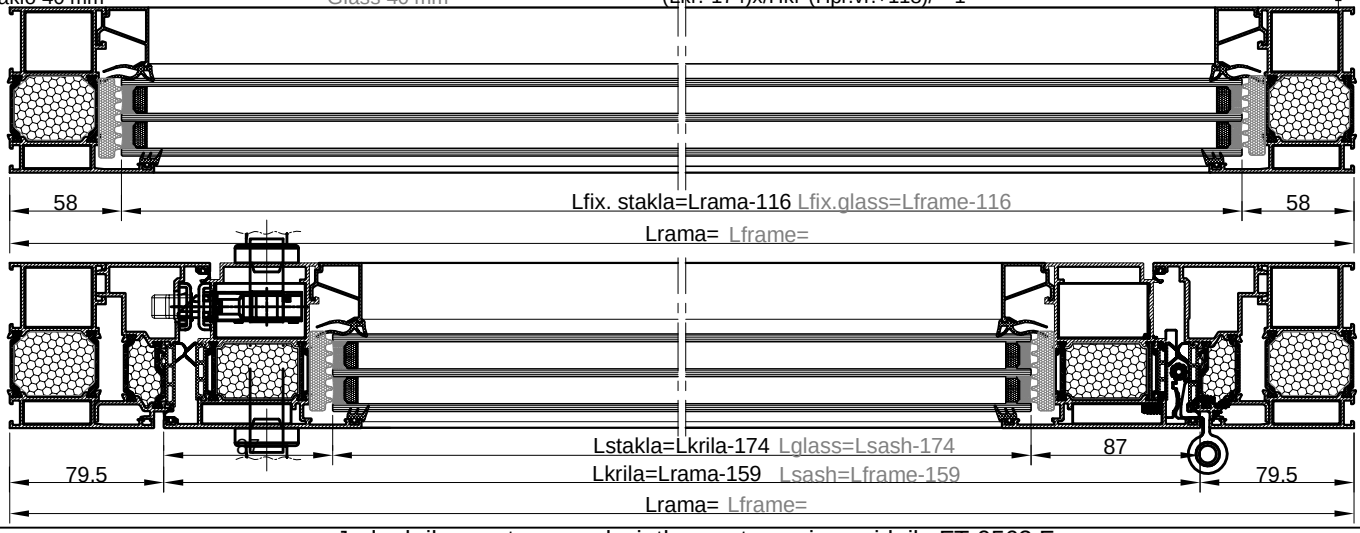


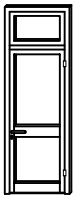




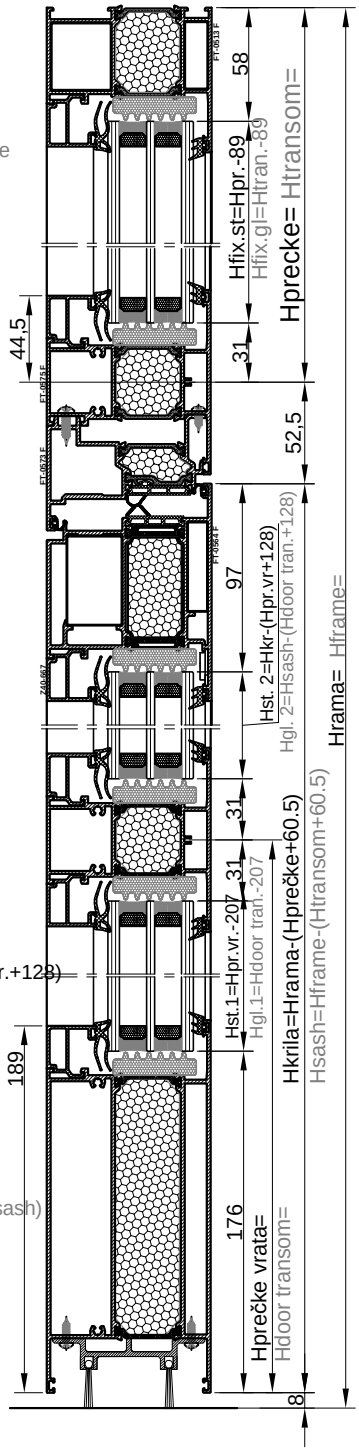
naziv name		mjera dimension	kom. pcs.	pilanje sawing angle
Ram FT-0513 F	Frame FT-0513 F	L	1	45-45
Ram FT-0513 F	Frame FT-0513 F	H	2	45-90
Krilo FT-0562 F	Sash FT-0562 F	L-159	1	45-45
Krilo FT-0562 F	Sash FT-0562 F	H-(Hpr.+60.5)	2	45-90
Prečka FT-0575 F	Transom FT-0575 F	L-87.5	1	90-90
Prečka na krilu FT-0575 F	Transom-in sash FT-0575 F	Lkr-147	1	90-90
Staklo lajsna Z40-668	Glazing bead Z40-668	L-99	2	90-90
Staklo lajsna Z40-668	Glazing bead Z40-668	Lkr-160	4	90-90
Staklo lajsna Z40-668	Glazing bead Z40-668	Hpr.-116	2	90-90
Staklo lajsna Z40-668	Glazing bead Z40-668	Hpr.vr.-233.5	2	90-90
Staklo lajsna Z40-668	Glazing bead Z40-668	H-(Hpr.+Hpr.vr.+207)	2	90-90
Parapetna prečka FT-0576 F	Tren.-bottom sash prof. FT-0576 F	Lkr-147	1	90-90
Umetak FT-0573 F	Additional profile FT-0573 F	L-87.5	1	45-45
Umetak FT-0573 F	Additional profile FT-0573 F	H-(Hpr+17)	2	90-45
Kutna spojnica 710.145	Corner bracket 710.145		2	
Kutna spojnica 710.133	Corner bracket 710.133		2	
Kutna spojnica 710.091	Corner bracket 710.091		2	
Kutna spojnica 710.134	Corner bracket 710.134		2	
Kutna spojnica 731.010	Corner bracket 731.010		2	
Kutna spojnica 730.001	Corner bracket 730.001		8	
Veznik prečke 710.066	T bracket 710.066		12	
Veznik prečke 710.079	T bracket 710.079		4	
Veznik prečke 710.171	T bracket 710.171		8	
Centralna brtva rama 334.009	Central gasket-frame 334.009	1Lkr+2Hkr		
Centralna brtva krila 334.010	Central gasket-sash 334.010	1Lkr+2Hkr		
Brtva prema staklu vanjska 321.003	Glazing gasket -external- 321.003	2Lrama+4Lkr+2Hpreč+2Hkr		
Brtva prema staklu unutarnja 311.004	Glazing gasket -internal- 311.004	2Lrama+4Lkr+2Hpreč+2Hkr		
Brtva na spoju rama i krila 321.006	Rebate gasket 321.006	2Lkr+4Hkr		
Izolacijski umetak 340.013	Underglass insulator 340.013	2(L-91.5)+2(Hpr.-89)		
Izolacijski umetak 340.013	Underglass insulator 340.013	4(Lkr.-150)+2(Hpr.vr.-207)+2/Hkr-(Hpr.vr.+118)		
Pvc umetak u parap. prečki 374.048	Pvc prof. for transom /bottom sash prof./374.048	Lkr-54	1	
Četkasta brtva 347.001	Brush seal 347.001		2	
Brava G-U Secury s MR2 (35) tri ključanja 122.016	Multipoint lock - G-U Secury MR2 (35) -122.016		1	
Prihvatna pločica 24x6x2 122.028	Striking plate 24x6x2 122.028		2	
Prihvatni lim 24x6 (desni) 122.029	Striking plate 24x6 (right) 122.029		1	
Trodijelna cilindrična šarka 112.012.01 - bijela	Barrel door hinge-3 part 112.012.01 - white	2 ili (3) po krilu ovisno o visini i tež.krila 2 or (3) per sash(dep. of height and weight of sash)		
Ručka za vrata 102.028	Door handle 102.028		2	
Četvrtka 102.025	Square spindle 102.025		1	
Cilindar (35-75) 122.095	Cylinder (35-75) 122.095		1	
Štitnik cilindra 122.098	Cylinder rosette 122.098		2	
Protuprovalni umetak 141.002	Security pin 141.002		2	
Staklo 40 mm	Glass 40 mm	(L-116)x(Hpr.-89)	1	
Staklo 40 mm	Glass 40 mm	(Lkr.-174)x(Hpr.vr.-207)	1	
Staklo 40 mm	Glass 40 mm	(Lkr.-174)x/Hkr-(Hpr.vr.+118)/	1	

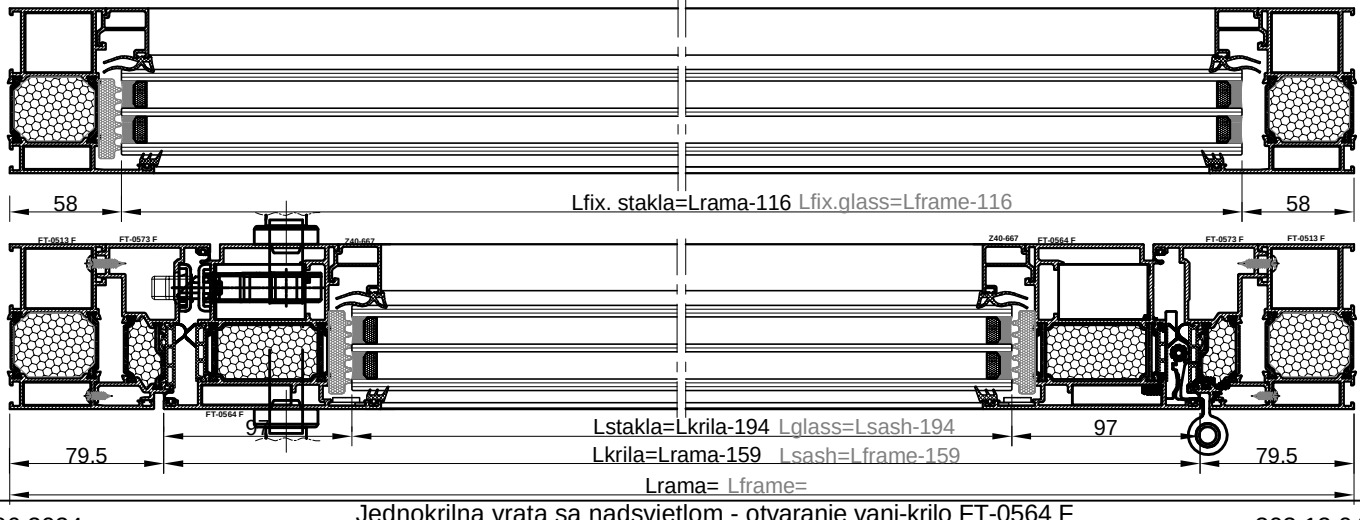




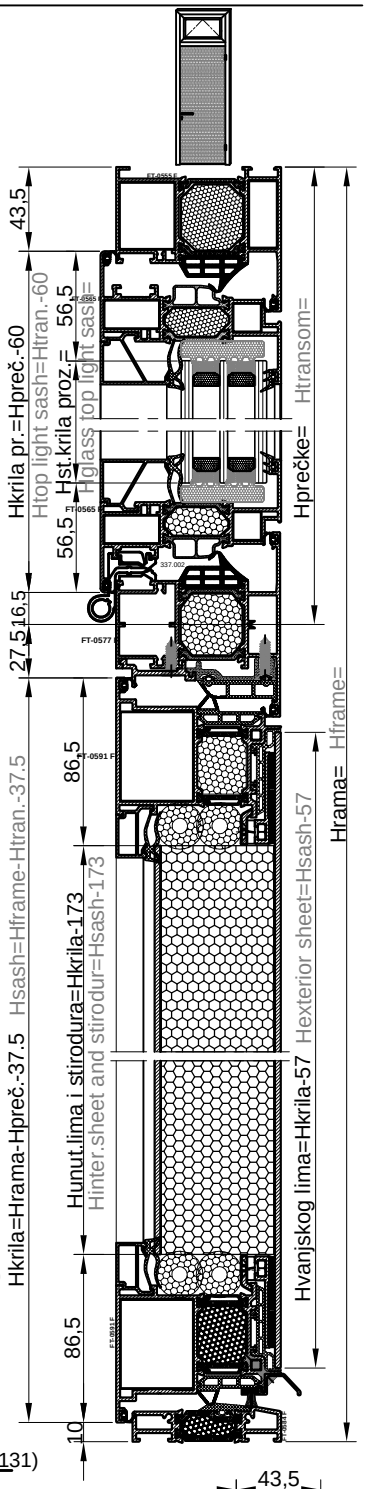


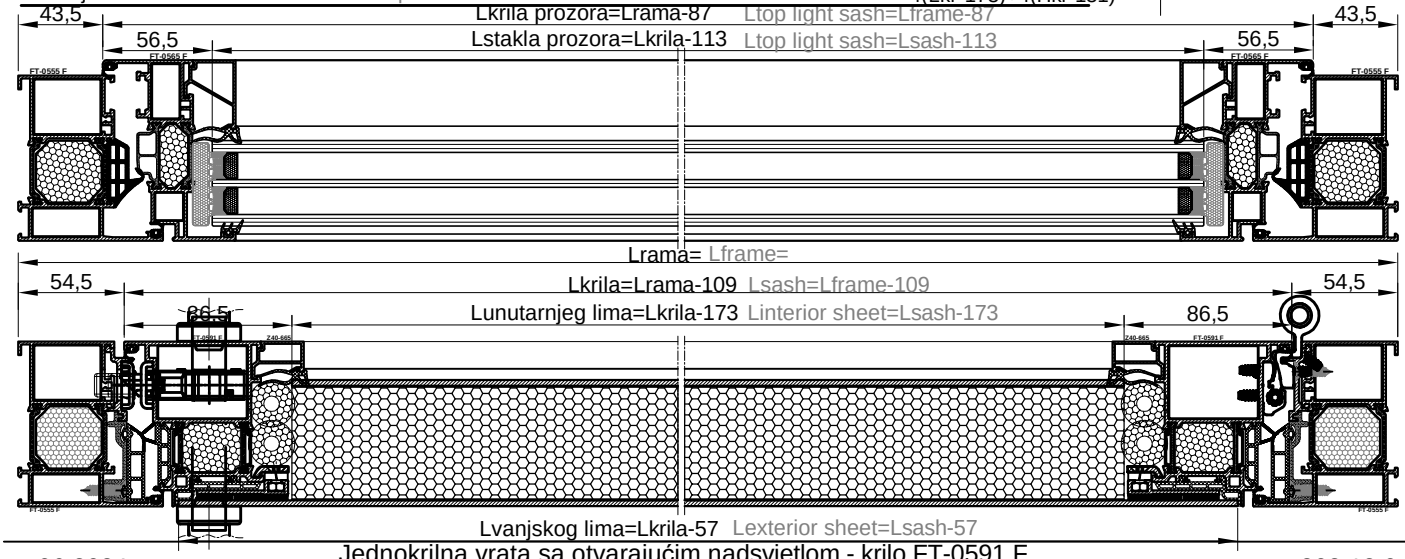
naziv name		mjera dimension	kom. pcs.	pilanje sawing angle
Ram FT-0513F	Frame FT-0513F	L	1	45-45
Ram FT-0513F	Frame FT-0513F	H	2	45-90
Krilo FT-0564F	Sash FT-0564F	L-159	1	45-45
Krilo FT-0564F	Sash FT-0564F	H-(Hpr.+60.5)	2	45-90
Prečka FT-0575F	Transom FT-0575F	L-87.5	1	90-90
Prečka na krilu FT-0575F	Transom-in sash FT-0575F	Lkr-167	1	90-90
Staklo lajsna Z40-667	Glazing bead Z40-667	L-99	2	90-90
Staklo lajsna Z40-667	Glazing bead Z40-667	Lkr-180	4	90-90
Staklo lajsna Z40-667	Glazing bead Z40-667	Hpr.-116	2	90-90
Staklo lajsna Z40-667	Glazing bead Z40-667	Hpr.vr.-233.5	2	90-90
Staklo lajsna Z40-667	Glazing bead Z40-667	H-(Hpr.+Hpr.vr.+217)	2	90-90
Parapetna prečka FT-0576F	Tran.-bottom sash prof. FT-0576F	Lkr-167	1	90-90
Umetak FT-0573F	Additional profile FT-0573F	L-87.5	1	45-45
Umetak FT-0573F	Additional profile FT-0573F	H-(Hpr+17)	2	90-45
Kutna spojnica 710.145	Corner bracket 710.145		2	
Kutna spojnica 710.133	Corner bracket 710.133		2	
Kutna spojnica 710.091	Corner bracket 710.091		2	
Kutna spojnica 710.134	Corner bracket 710.134		2	
Kutna spojnica 731.010	Corner bracket 731.010		2	
Kutna spojnica 730.001	Corner bracket 730.001		4	
Veznik prečke 710.066	T bracket 710.066		12	
Veznik prečke 710.079	T bracket 710.079		4	
Veznik prečke 710.171	T bracket 710.171		8	
Centralna brtva rama 334.009	Central gasket-frame 334.009	1Lkr+2Hkr		
Centralna brtva krila 334.010	Central gasket-sash 334.010	1Lkr+2Hkr		
Brtva prema staklu vanjska 321.003	Glazing gasket -external- 321.003	2Lrama+4Lkr+2Hpreč+2Hkr		
Brtva prema staklu unutarnja 311.004	Glazing gasket -internal- 311.004	2Lrama+4Lkr+2Hpreč+2Hkr		
Brtva na spoju rama i krila 321.006	Rebate gasket 321.006	2Lkr+4Hkr		
Izolacijski umetak 340.013	Underglass insulator 340.013	2(L-91.5)+2(Hpr.-89)		
Izolacijski umetak 340.013	Underglass insulator 340.013	4(Lkr.-170)+2(Hpr.vr.-207)+2/Hkr-(Hpr.vr.+128)		
Pvc umetak u parap. prečki 374.048	Pvc prof. for transom /bottom sash prof./ 374.048	Lkr-54	1	
Četkasta brtva 347.001	Brush seal 347.001	Lkr-54	2	
Brava G-U Secury s MR2 (45) tri ključanja 122.015	Multipoint lock - G-U Secury MR2 (45) -122.015		1	
Prihvatna pločica 24x6x2 122.028	Striking plate 24x6x2 122.028		2	
Prihvatni lim 24x6 (desni) 122.029	Striking plate 24x6 (right) 122.029		1	
Trodijelna cilindrična šarka 112.012.01 - bijela	Barrel door hinge-3 part 112.012.01 - white	2 ili (3) po krilu ovisno o visini i tež.krila 2 or (3) per sash(dep. of height and weight of sash)		
Ručka za vrata 102.028	Door handle 102.028		1	
Četvrtka 102.025	Square spindle 102.025		1	
Cilindar (35-75) 122.095	Cylinder (35-75) 122.095		1	
Štitnik cilindra 122.098	Cylinder rosette 122.098		2	
Protuprovalni umetak 141.002	Security pin 141.002		2	
Staklo 44 mm	Glass 44 mm	(L-116)x(Hpr.-89)	1	
Staklo 44 mm	Glass 44 mm	(Lkr.-194)x(Hpr.vr.-207)	1	
Staklo 44 mm	Glass 44 mm	(Lkr.-194)x/Hkr-(Hpr.vr.+128)/	1	



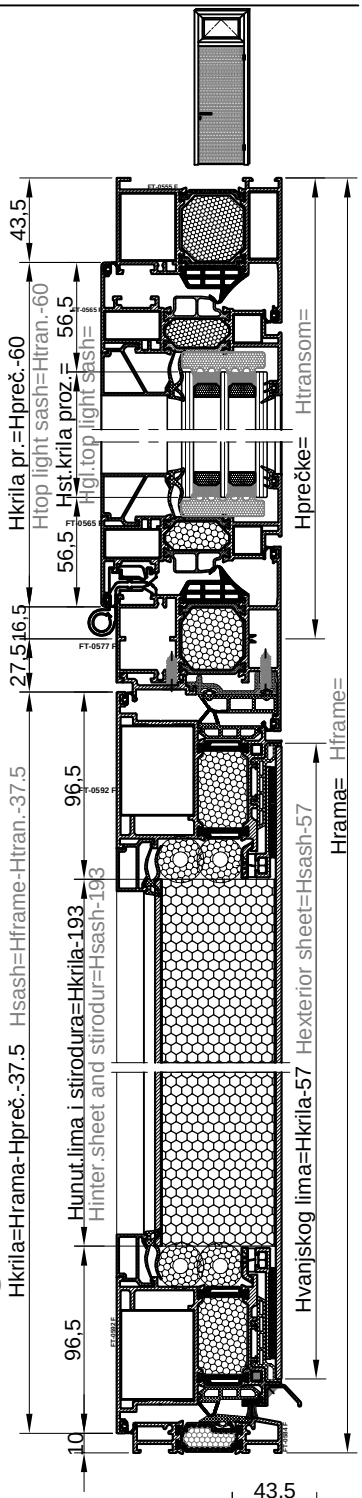


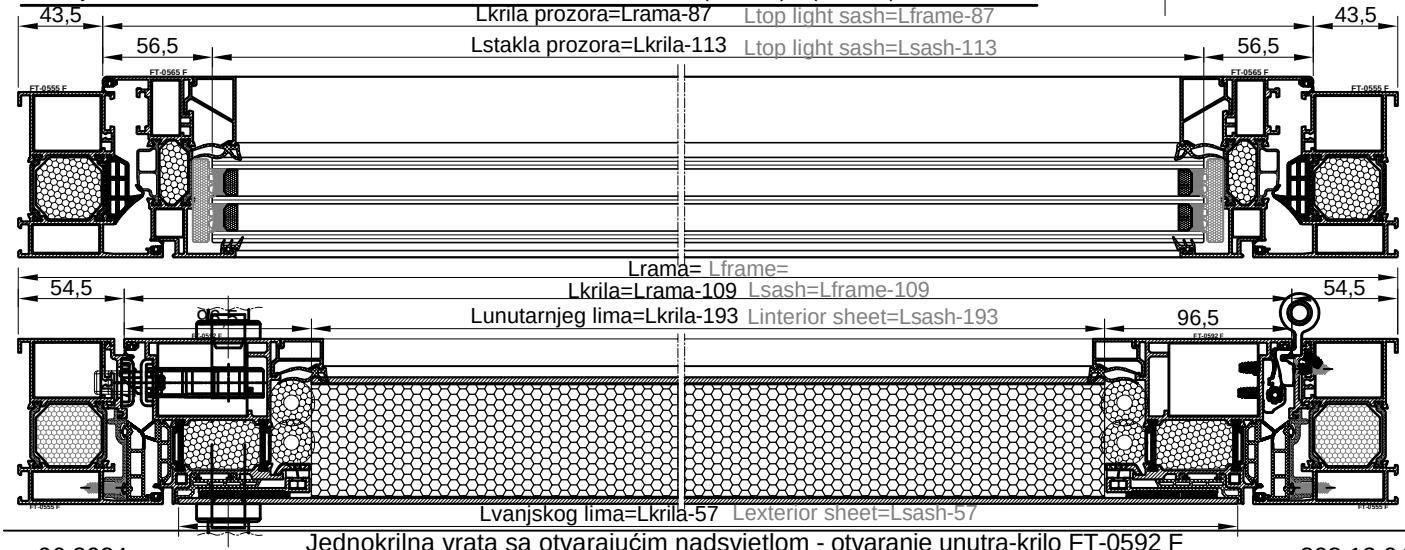
naziv name		mjera dimension	kom. pcs.	pilanje sawing angle
Ram FT-0555F	Frame FT-0555F	L	1	45-45
Ram FT-0555F	Frame FT-0555F	H	2	45-90
Krilo FT-0591F	Sash FT-0591F	L-109	2	45-45
Krilo FT-0591F	Sash FT-0591F	H-Hpreč.-37.5	2	45-45
Prag FT-0584F	Threshold FT-0584F	L-180	1	90-90
Prečka FT-0577F	Transom FT-0577F	L-89	1	90-90
Krilo prozora FT-0565F	Top light sash FT-0565F	L-87	2	45-45
Krilo prozora FT-0565F	Top light sash FT-0565F	Hpreč.-60	2	45-45
Al umetak F-1222	Additional profile F-1222	L-89	1	45-45
Al umetak F-1222	Additional profile F-1222	H-Hpreč.-17.5	2	45-90
Okapnica F-1200	Drip cap profile F-1200	Lkr-54	1	90-90
Al profil F-1093	Al profile F-1093	Lkr-76	2	45-45
Al profil F-1093	Al profile F-1093	Hkr-76	2	45-45
Staklo lajsna Z40-665	Glazing bead Z40-665	Lkrila-141	2	90-90
Staklo lajsna Z40-665	Glazing bead Z40-665	Hkr-185	2	90-90
Staklo lajsna Z40-669	Glazing bead Z40-669	Lkrila proz.-93	2	90-90
Staklo lajsna Z40-669	Glazing bead Z40-669	Hkrila proz.-137	2	90-90
Kutna spojnica 710.072	Corner bracket 710.072		2	
Kutna spojnica 710.173	Corner bracket 710.173		2	
Kutna spojnica 710.136	Corner bracket 710.136		4	
Kutna spojnica 710.015	Corner bracket 710.015		4	
Kutna spojnica 710.203	Corner bracket 710.203		4	
Kutna spojnica 730.001	Corner bracket 730.001		10	
Kutna spojnica 710.485	Corner bracket 710.485		4	
Kutna spojnica 710.458	Corner bracket 710.458		4	
Kopča 141.001	Panel clamp 141.001		(2Lkr+2Hkr)/250	
Centralna brtva rama 334.005	Central gasket-frame 334.005	1Lkr+2Hkr		
Centralna brtva krila 334.006	Central gasket-sash 334.006	3Lkr+4Hkr		
Brtva na spoju rama i krila 321.006	Rebate gasket 321.006	3Lkr+4Hkr		
Brtva 344.004	Gasket 344.004	2(Lkr-53)+2(Hkr-53)		
Brtva prema panelu unut. 311.003	Panel gasket-internal 311.003	2Lkr+2Hkr		
Brtva praga 331.013	Threshold gasket 331.013	L-180	1	90-90
Vanjska brtva krila 321.002	Glazing gasket-external 321.002	2Lkr. proz.+2Hkr.proz		
Unutarnja brtva krila 311.004	Glazing gasket-internal 311.004	2Lkr. proz.+2Hkr.proz		
Centralna brtva prozora 337.002	Central gasket-window 337.002	2Lkr. proz.+2Hkr.proz		
Četkica 7x9 347.003	Brush seal 7x9 347.003	Lkr-35	1	90-90
Čep okapnice F-1200 373.027	End cap for F-1200 373.027		1 par	
Umetak na pragu 373.019	End cap for threshold 373.019		1 par	
Umetak na ramu 374.043	Additional pvc profile 374.043	L-88	1	45-45
Umetak na ramu 374.043	Additional pvc profile 374.043	H-Hpreč.-17	2	45-90
Brava G-U Secury s MR2 (35) tri ključanja 122.016	Multipoint lock - G-U Secury MR2 (35) -122.016		1	
Prihvatna pločica 24x6x2 122.028	Striking plate 24x6x2 122.028		2	
Prihvatni lim 24x6 (lijevi) 122.081	Striking plate 24x6 (left) 122.081		1	
Trodijelna cilindrična šarka 112.011.01 - bijela	Barrel door hinge-3 part 112.011.01 - white	2 ili (3) po krilu ovisno o visini i tež.krila 2 or (3) per sash(dep. of height and weight of sash)		
Ručka za vrata 102.028	Door handle 102.028		2	
Četvrtka 102.025	Square spindle 102.025		1	
Cilindar (35-75) 122.095	Cylinder (35-75) 122.095		1	
Štitnik cilindra 122.098	Cylinder rosette 122.098		2	
Protuprovalni umetak 141.002	Security pin 141.002		2	
Izolacijski umetak Ø25 340.035	Underpanel insulator Ø25 340.035		4(Lkr-173)+4(Hkr-131)	



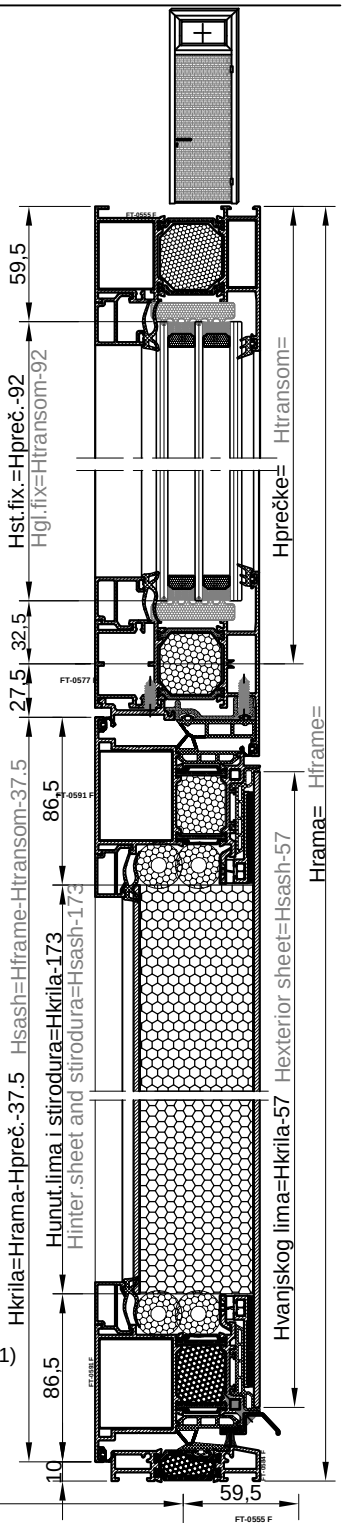


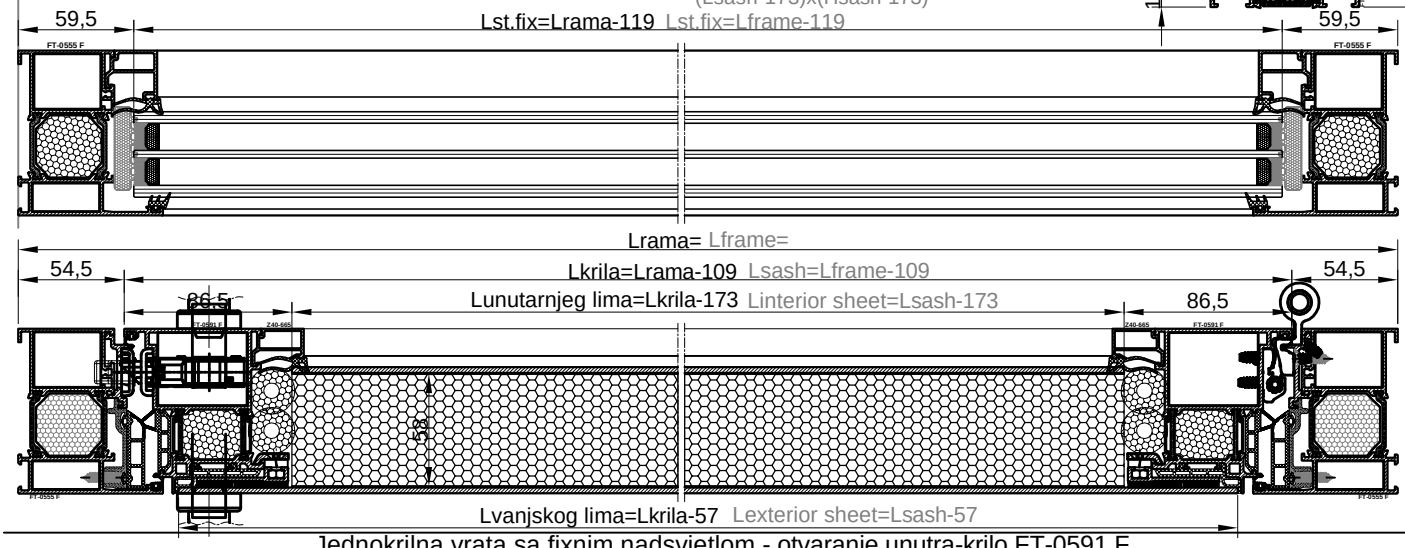
naziv name		mjera dimension	kom. pcs.	pilanje sawing angle
Ram FT-0555F	Frame FT-0555F	L	1	45-45
Ram FT-0555F	Frame FT-0555F	H	2	45-90
Krilo FT-0592F	Sash FT-0591F	L-109	2	45-45
Krilo FT-0592F	Sash FT-0591F	H-Hpreč.-37.5	2	45-45
Prag FT-0584F	Threshold FT-0584F	L-180	1	90-90
Prečka FT-0577F	Transom FT-0577F	L-89	1	90-90
Krilo prozora FT-0565F	Top light sash FT-0565F	L-87	2	45-45
Krilo prozora FT-0565F	Top light sash FT-0565F	Hpreč.-60	2	90-90
Al umetak F-1222	Additional profile F-1222	L-89	1	45-45
Al umetak F-1222	Additional profile F-1222	H-Hpreč.-17.5	2	45-90
Okapnica F-1200	Drip cap profile F-1200	Lkr-54	2	90-90
Al profil F-1205	Al profile F-1093	Lkr-76	2	45-45
Al profil F-1205	Al profile F-1093	Hkr-76	2	45-45
Staklo lajsna Z40-665	Glazing bead Z40-665	Lkr-161	2	90-90
Staklo lajsna Z40-665	Glazing bead Z40-665	Hkr-205	2	90-90
Staklo lajsna Z40-669	Glazing bead Z40-669	Lkrila proz.-93	2	90-90
Staklo lajsna Z40-669	Glazing bead Z40-669	Hkr.proz.-137	2	90-90
Kutna spojnica 710.072	Corner bracket 710.072		2	
Kutna spojnica 710.173	Corner bracket 710.173		2	
Kutna spojnica 710.136	Corner bracket 710.136		4	
Kutna spojnica 710.015	Corner bracket 710.015		4	
Kutna spojnica 710.203	Corner bracket 710.203		4	
Kutna spojnica 730.001	Corner bracket 730.001		10	
Kutna spojnica 710.485	Corner bracket 710.485		4	
Kutna spojnica 710.458	Corner bracket 710.458		4	
Kopča 141.001	Panel clamp 141.001		(2Lkr+2Hkr)/250	
Centralna brtva rama 334.005	Central gasket-frame 334.005	1Lkr+2Hkr		
Centralna brtva krila 334.006	Central gasket-sash 334.006	2Lkr+2Hkr		
Brtva na spoju rama i krila 321.006	Rebate gasket 321.006	3Lkr+4Hkr+4L+4Hpreč.		
Brtva 344.004	Gasket 344.004	2(Lkr-53)+2(Hkr-53)		
Brtva prema panelu unut. 311.003	Panel gasket-internal 311.003	2Lkr+2Hkr		
Brtva praga 331.013	Threshold gasket 331.013	L-180	1	90-90
Vanjska brtva krila 321.002	Glazing gasket-external 321.002	2L+2Hpreč.		
Unutarnja brtva krila 311.004	Glazing gasket-internal 311.004	2L+2Hpreč.		
Centralna brtva prozora 337.002	Central gasket-window 337.002	2L+2Hpreč.		
Četkica 7x9 347.003	Brush seal 7x9 347.003	Lkr-35	1	90-90
Čep okapnice F-1200 373.027	End cap for F-1200 373.027		1 par	
Umetak na pragu 373.019	End cap for threshold 373.019		1 par	
Umetak na ramu 374.043	Additional pvc profile 374.043	L-88	1	45-45
Umetak na ramu 374.043	Additional pvc profile 374.043	H-Hpreč.-17	2	45-90
Brava G-U Secury s MR2 (45) tri ključanja 122.015	Multipoint lock - G-U Secury MR2 (45) -122.015		1	
Prihvatna pločica 24x6x2 122.028	Striking plate 24x6x2 122.028		2	
Prihvatni lim 24x6 (lijevi) 122.081	Striking plate 24x6 (left) 122.081		1	
Trodijelna cilindrična šarka 112.011.01 - bijela	Barrel door hinge-3 part 112.011.01 - white	2 ili (3) po krilu ovisno o visini i tež.krila 2 or (3) per sash(dep. of height and weight of sash)		
Ručka za vrata 102.028	Door handle 102.028		2	
Četvrtka 102.025	Square spindle 102.025		1	
Cilindar (35-75) 122.095	Cylinder (35-75) 122.095		1	
Štitnik cilindra 122.098	Cylinder rosette 122.098		2	
Protuprovalni umetak 141.002	Security pin 141.002		2	
Izolacijski umetak Ø25 340.035	Underpanel insulator Ø25 340.035	4(Lkr-193)+4(Hkr-151)		



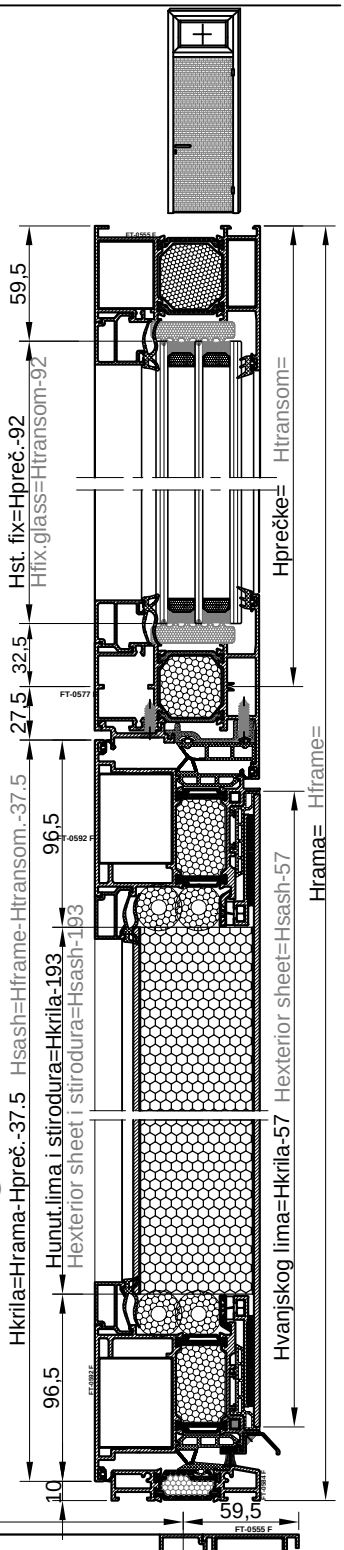


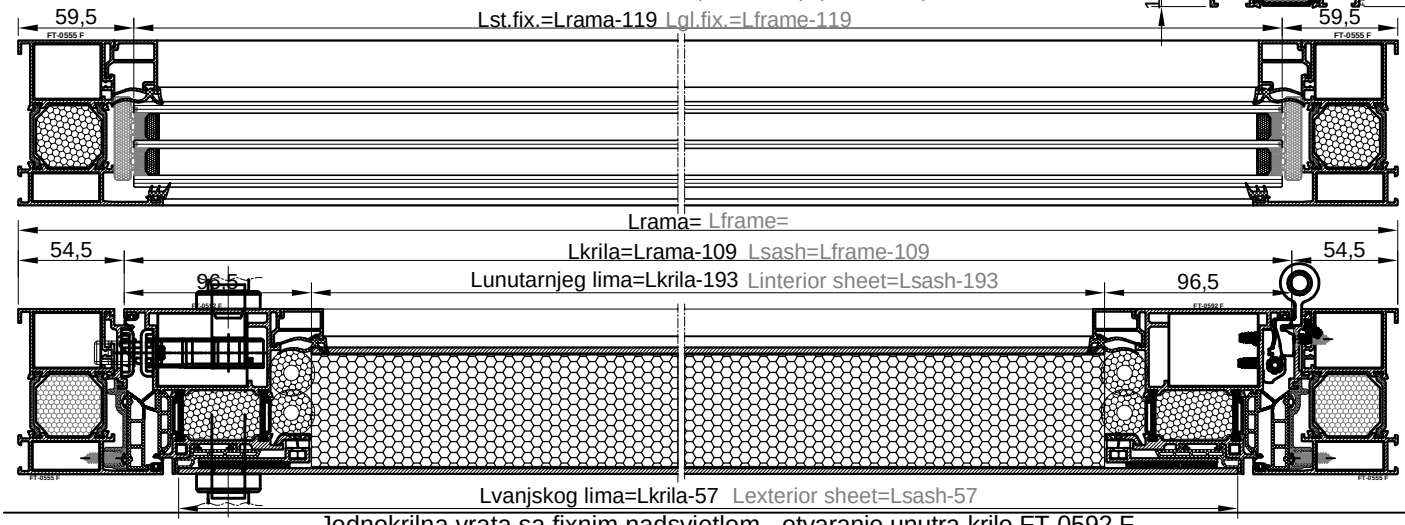
naziv name		mjera dimension	kom. pcs.	pilanje sawing angle
Ram FT-0555F	Frame FT-0555F	L	1	45-45
Ram FT-0555F	Frame FT-0555F	H	2	45-90
Krilo FT-0591F	Sash FT-0591F	L-109	2	45-45
Krilo FT-0591F	Sash FT-0591F	H-Hpreč.-37.5	2	45-45
Prag FT-0584F	Threshold FT-0584F	L-180	1	90-90
Prečka FT-0577F	Transom FT-0577F	L-89	1	90-90
Al umetak F-1222	Additional profile F-1222	L-89	1	45-45
Al umetak F-1222	Additional profile F-1222	H-Hpreč.-17.5	2	45-90
Okapnica F-1200	Drip cap profile F-1200	Lkr-54	1	90-90
Al profil F-1093	Al profile F-1093	Lkr-76	2	45-45
Al profil F-1093	Al profile F-1093	Hkr-76	2	45-45
Staklo lajsna Z40-665	Glazing bead Z40-665	Lkrila-141	2	90-90
Staklo lajsna Z40-665	Glazing bead Z40-665	Hkr-185	2	90-90
Staklo lajsna nadsv. Z40-667	Glazin bead-top light Z40-667	L-99	2	90-90
Staklo lajsna nadsv. Z40-667	Glazin bead-top light Z40-667	Hpreč.-116	2	90-90
Kutna spojnica 710.072	Corner bracket 710.072		2	
Kutna spojnica 710.173	Corner bracket 710.173		2	
Kutna spojnica 710.136	Corner bracket 710.136		4	
Kutna spojnica 710.015	Corner bracket 710.015		4	
Kutna spojnica 710.203	Corner bracket 710.203		4	
Kutna spojnica 730.001	Corner bracket 730.001		6	
Kopča 141.001	Panel clamp 141.001		(2Lkr+2Hkr)/250	
Centralna brtva rama 334.005	Central gasket-frame 334.005	1Lkr+2Hkr		
Centralna brtva krila 334.006	Central gasket-sash 334.006	3Lkr+4Hkr		
Brtva na spoju rama i krila 321.006	Rebate gasket 321.006	3Lkr+4Hkr		
Brtva 344.004	Gasket 344.004	2(Lkr-53)+2(Hkr-53)		
Brtva prema panelu unut. 311.003	Panel gasket-internal 311.003	2Lkr+2Hkr		
Brtva praga 331.013	Threshold gasket 331.013	L-180	1	90-90
Vanjska brtva krila 321.002	Glazing gasket-external 321.002	2L.+2Hkpreč.		
Unutarnja brtva krila 311.004	Glazing gasket-internal 311.004	2L.+2Hkpreč.		
Četkica 7x9 347.003	Brush seal 7x9 347.003	Lkr-35	1	90-90
Čep okapnice F-1200 373.027	End cap for F-1200 373.027		1 par	
Umetak na pragu 373.019	End cap for threshold 373.019		1 par	
Umetak na ramu 374.043	Add. pvc profile 374.043	L-88	1	45-45
Umetak na ramu 374.043	Add. pvc profile 374.043	H-Hpreč.-17	2	45-90
Brava G-U Secury s MR2 (35) tri ključanja 122.016	Multipoint lock - G-U Secury MR2 (35) -122.016		1	
Prihvatna pločica 24x6x2 122.028	Striking plate 24x6x2 122.028		2	
Prihvatni lim 24x6 (lijevi) 122.081	Striking plate 24x6 (left) 122.081		1	
Trodijelna cilindrična šarka 112.011.01 - bijela	Barrel door hinge-3 part 112.011.01 - white	2 ili (3) po krilu ovisno o visini i tež.krila 2 or (3) per sash(dep. of height and weight of sash)		
Ručka za vrata 102.028	Door handle 102.028		2	
Četvrtka 102.025	Square spindle 102.025		1	
Cilindar (35-75) 122.095	Cylinder (35-75) 122.095		1	
Štitnik cilindra 122.098	Cylinder rosette 122.098		2	
Protuprovalni umetak 141.002	Security pin 141.002		2	
Izolacijski umetak Ø25 340.035	Underpanel insulator Ø25 340.035		4(Lkr-173)+4(Hkr-131)	
Vanjski lim panela 3 mm	Exterior sheet 3 mm	(Lkr.-57)x(Hkr.-57)	1	
Unutarnji lim panela 3 mm	Interior sheet 3 mm	LkrxHkr	1	
Stirodur (ispuna panela 58 mm)	Stirodur (panel 81.4 mm)	(Lkrila-173)x(Hkrila-173) (Lsash-173)x(Hsash-173)	1	

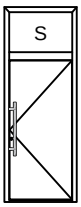




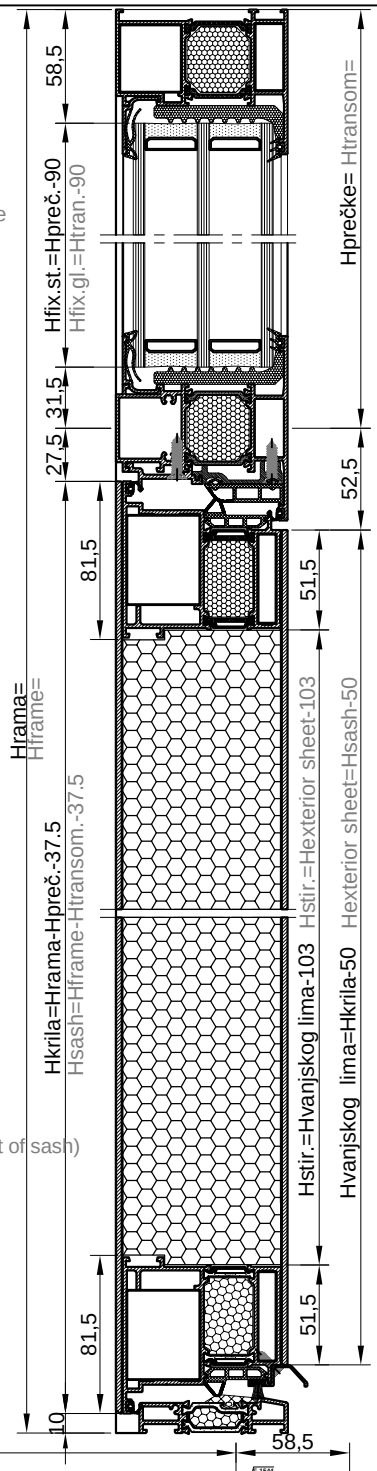
naziv name		mjera dimension	kom. pcs.	pilanje sawing angle
Ram FT-0555F	Frame FT-0555F	L	1	45-45
Ram FT-0555F	Frame FT-0555F	H	2	45-90
Krilo FT-0592F	Sash FT-0591F	L-109	2	45-45
Krilo FT-0592F	Sash FT-0591F	H-Hpreč.-37.5	2	45-45
Prag FT-0584F	Threshold FT-0584F	L-180	1	90-90
Prečka FT-0577F	Transom FT-0577F	L-89	1	90-90
Al umetak F-1222	Additional profile F-1222	L-89	1	45-45
Al umetak F-1222	Additional profile F-1222	H-Hpreč.-17.5	1	45-90
Okapnica F-1200	Drip cap profile F-1200	Lkr-54	1	90-90
Al profil F-1205	Al profile F-1205	Lkr-76	2	45-45
Al profil F-1205	Al profile F-1205	Hkr-76	2	45-45
Staklo lajsna Z40-665	Glazing bead Z40-665	Lkr-161	2	90-90
Staklo lajsna Z40-665	Glazing bead Z40-665	Hkr-205	2	90-90
Staklo lajsna Z40-667	Glazing bead Z40-667	L-99	2	90-90
Staklo lajsna Z40-667	Glazing bead Z40-667	Hpreč.-116	2	90-90
Kutna spojnica 710.072	Corner bracket 710.072		2	
Kutna spojnica 710.173	Corner bracket 710.173		2	
Kutna spojnica 710.136	Corner bracket 710.136		4	
Kutna spojnica 710.015	Corner bracket 710.015		4	
Kutna spojnica 710.203	Corner bracket 710.203		4	
Kutna spojnica 730.001	Corner bracket 730.001		6	
Kopča 141.001	Panel clamp 141.001		(2Lkr+2Hkr)/250	
Centralna brtva rama 334.005	Central gasket-frame 334.005	1Lkr+2Hkr		
Centralna brtva krila 334.006	Central gasket-sash 334.006	2Lkr+2Hkr		
Brtva na spoju rama i krila 321.006	Rebate gasket 321.006	3Lkr+4Hkr		
Brtva 344.004	Gasket 344.004	2(Lkr-53)+2(Hkr-53)		
Brtva prema panelu unut. 311.003	Panel gasket-internal 311.003	2Lkr+2Hkr		
Brtva praga 331.013	Threshold gasket 331.013	L-180	1	90-90
Vanjska brtva fix. 321.003	Glazing gasket-external 321.003	2L+2Hpreč.		
Unutarnja brtva fix. 311.004	Glazing gasket-external 311.004	2L+2Hpreč.		
Četkica 7x9 347.003	Brush seal 7x9 347.003	Lkr-35	1	90-90
Čep okapnice F-1200 373.027	End cap for F-1200 373.027		1 par	
Umetak na pragu 373.019	End cap for threshold 373.019		1 par	
Umetak na ramu 374.043	Additional pvc profile 374.043	L-88	1	45-45
Umetak na ramu 374.043	Additional pvc profile 374.043	H-Hpreč.-17	2	45-90
Brava G-U Secury s MR2 (45) tri ključanja 122.015	Multipoint lock - G-U Secury MR2 (45) -122.015		1	
Prihvatna pločica 24x6x2 122.028	Striking plate 24x6x2 122.028		2	
Prihvatni lim 24x6 (lijevi) 122.081	Striking plate 24x6 (left) 122.081		1	
Trodijelna cilindrična šarka 112.011.01 - bijela	Barrel door hinge-3 part 112.011.01 - white	2 ili (3) po krilu ovisno o visini i tež.krila 2 or (3) per sash(dep. of height and weight of sash)		
Ručka za vrata 102.028	Door handle 102.028		2	
Četvrtka 102.025	Square spindle 102.025		1	
Cilindar (35-75) 122.095	Cylinder (35-75) 122.095		1	
Štitnik cilindra 122.098	Cylinder rosette 122.098		2	
Protuprovalni umetak 141.002	Security pin 141.002		2	
Izolacijski umetak Ø25 340.035	Underpanel insulator Ø25 340.035	4(Lkr-173)+4(Hkr-131)		
Vanjski lim panela 3 mm	Exterior sheet 3 mm	(Lkr.-57)x(Hkr.-57)	1	
Unutarnji lim panela 3 mm	Interior sheet 3 mm	LkrxHkr	1	
Stirodur (ispuna panela 58 mm)	Stirodur (panel 81.4 mm)	(Lkrila-193)x(Hkrila-193) (Lsash-193)x(Hsash-193)	1	

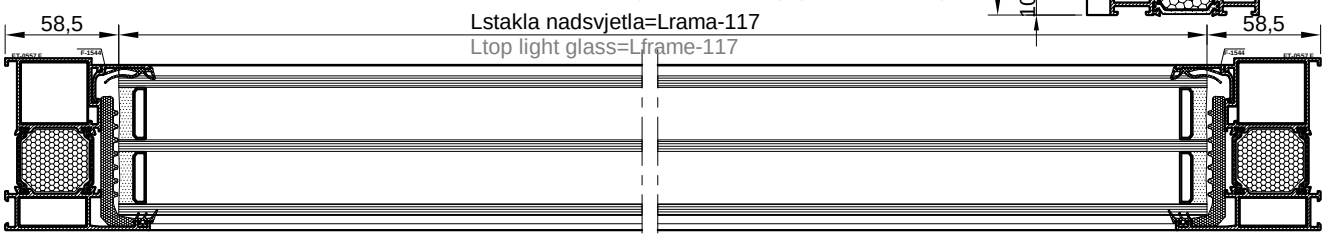


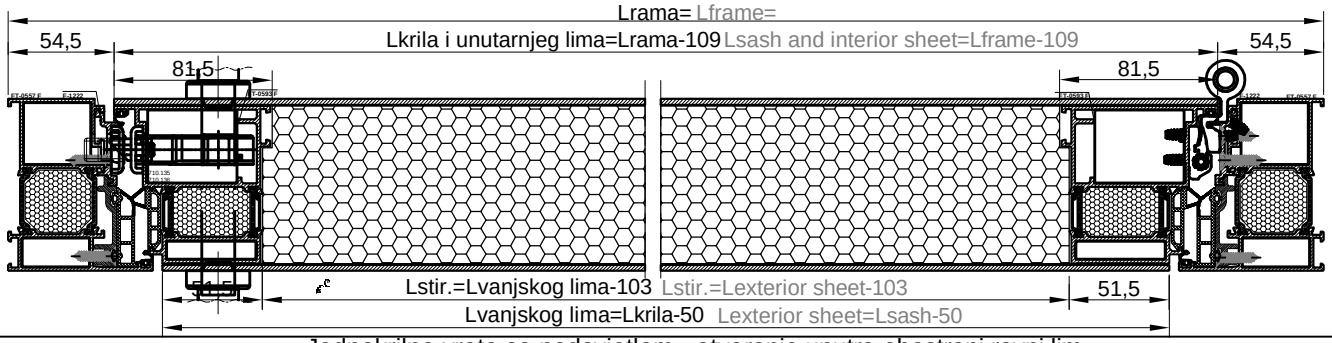




naziv name		mjera dimension	kom. pcs.	pilanje sawing angle
Ram FT-0557F	Frame FT-0557F	L	1	45-45
Ram FT-0557F	Frame FT-0557F	H	2	45-90
Krilo FT-0593F	Sash FT-0593F	L-109	2	45-45
Krilo FT-0593F	Sash FT-0593F	H-Hpreč.-37.5	2	45-45
Prag FT-0584F	Threshold FT-0584F	L-180	1	90-90
Prečka FT-0580F	Transom FT-0580F	L-89	1	90-90
Okapnica F-1200	Drip cap profile F-1200	Lkr-54	1	90-90
Al profil F-1222	Al profile F-1222	L-89	1	45-45
Al profil F-1222	Al profile F-1222	H-(Hpr.+17.5)	2	45-90
Staklo lajsna F-1544	Glazing bead F-1544	L-99	2	90-90
Staklo lajsna F-1544	Glazing bead F-1544	Hpreč.-122	2	90-90
Kutna spojnica 710.126	Corner bracket 710.126		2	
Kutna spojnica 710.173	Corner bracket 710.173		2	
Kutna spojnica 710.136	Corner bracket 710.136		4	
Kutna spojnica 710.169	Corner bracket 710.169		4	
Kutna spojnica 730.001	Corner bracket 730.001		6	
Centralna brtva rama 334.005	Central gasket-frame 334.005	1L+2H		
Centralna brtva krila 334.006	Central gasket-sash 334.006	2Lkr+2Hkr		
Brtva na spoju rama i krila 321.006	Rebate gasket 321.006	3Lkr+4Hkr		
Brtva praga 331.013	Threshold gasket 331.013	L-180	1	90-90
Vanjska brtva fix. 321.002	Glazing gasket-external 321.002	2L+2Hpreč		
Unutarnja brtva fix. 311.003	Glazing gasket-internal 311.003	2L+2Hpreč		
Četkica 7x9 347.003	Brush seal 7x9 347.003	Lkr-35	1	90-90
Čep okapnice F-1200 373.027	End cap for F-1200 373.027		1 par	
Umetak na pragu 373.019	End cap for threshold 373.019		1 par	
Umetak na ramu 374.043	Add. pvc profile 374.043	L-88	1	45-45
Umetak na ramu 374.043	Add. pvc profile 374.043	H-(Hpr+17)	2	45-90
Brava G-U Secury s MR2 (45) tri ključanja 122.015	Multipoint lock - G-U Secury MR2 (45) -122.015		1	
Prihvatna pločica 24x6x2 122.028	Striking plate 24x6x2 122.028		2	
Prihvatni lim 24x6 (lijevi) 122.081	Striking plate 24x6 (left) 122.081		1	
Trodijelna cilindrična šarka 112.011.01 - bijela	Barrel door hinge-3 part 112.011.01 - white	2 ili (3) po krilu ovisno o visini i tež.krila 2 or (3) per sash(dep. of height and weight of sash)		
Ručka za vrata 102.028	Door handle 102.028		2	
Četvrtka 102.025	Square spindle 102.025		1	
Cilindar (35-75) 122.095	Cylinder (35-75) 122.095		1	
Štitnik cilindra 122.098	Cylinder rosette 122.098		2	
Protuprovalni umetak 141.002	Security pin 141.002		2	
Vanjski lim panela 3 mm	Exterior sheet 3 mm	(Lkr.-50)x(Hkr.-50)	1	
Unutarnji lim panela 3 mm	Interior sheet 3 mm	LkrxHkr	1	
Stirodur (ispuna panela 81.4 mm)	Stirodur (panel 81.4 mm)	(Lvanj.lima-103)x(Hvanj.lima-103) (Lext.sheet-103)x(Hext.sheet-103)	1	

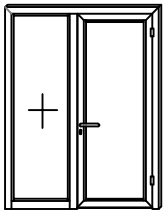


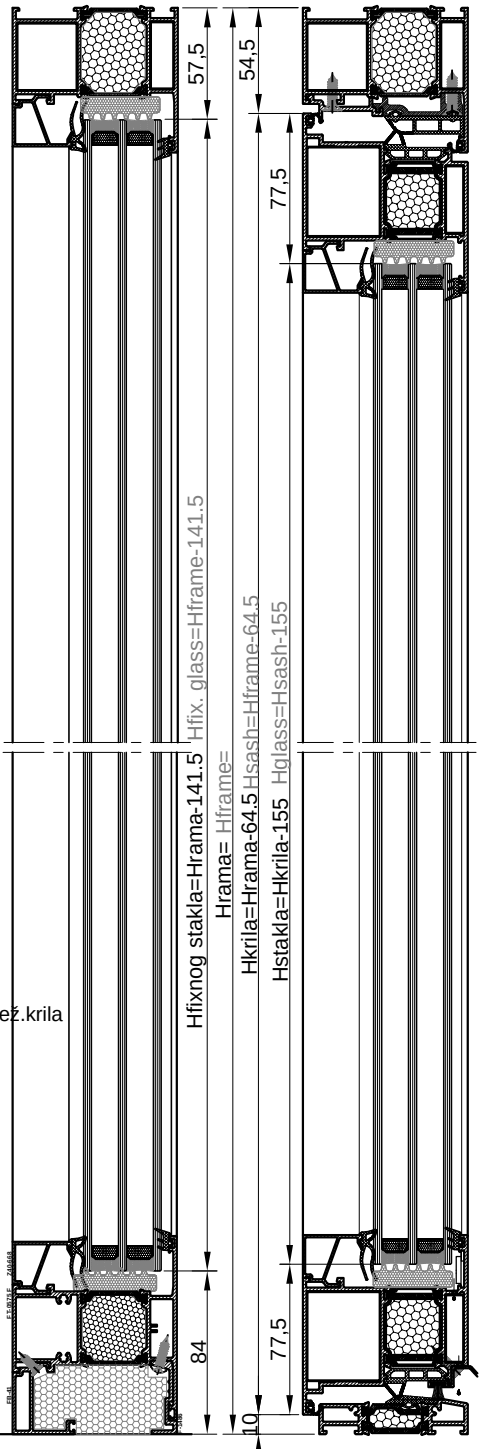


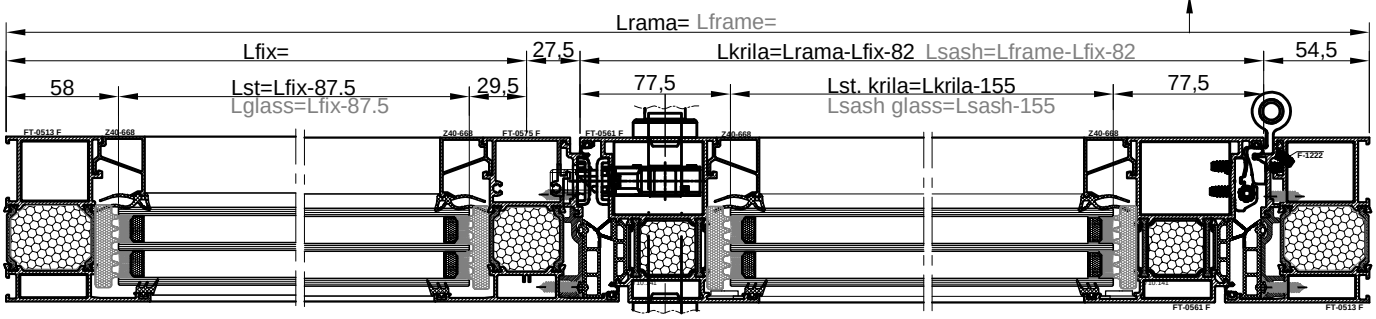


Jednokrilna vrata sa bočnim fiksnim poljem
Single-leaf door with side fixed field

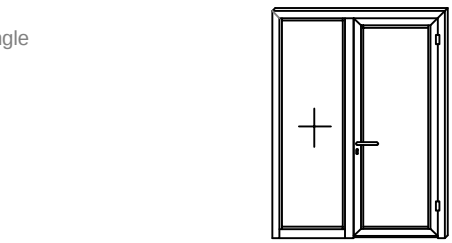
naziv name		mjera dimension	kom. pcs.	pilanje sawing angle
Ram FT-0513F	Frame FT-0513F	L	1	45-45
Ram FT-0513F	Frame FT-0513F	H	2	45-90
Krilo FT-0561F	Sash FT-0561F	L-Lfix-82	2	45-45
Krilo FT-0561F	Sash FT-0561F	H-64.5	2	45-45
Prag FT-0584F	Threshold FT-0584F	L-Lfix-153	1	90-90
Staklo lajsna Z40-668	Glazing bead Z40-668	Lfix-72	2	90-90
Staklo lajsna Z40-668	Glazing bead Z40-668	Lkr-141	2	90-90
Staklo lajsna Z40-668	Glazing bead Z40-668	H-170.5	2	90-90
Staklo lajsna Z40-668	Glazing bead Z40-668	Hkr-185	2	90-90
Prečka FT-0575F	Transom FT-0575F	H-44	1	90-90
Prečka na parap. FT-0575F	Tran.-bottom frame prof.FT-0575F	Lfix-60.5	1	90-90
Umetak rama F-1222	Additional profile F-1222	L-Lfix-62	1	45-45
Umetak rama F-1222	Additional profile F-1222	H-44.5	2	45-90
Umetak FB-41	Additional profile FB-41	Lfix-72	1	90-90
Umetak F-1486	Additional profile F-1486	Lfix-122	1	90-90
Okapnica F-1200	Drip cap profile F-1200	Lkr-54	1	90-90
Kutna spojnica 710.145	Corner bracket 710.145		2	
Kutna spojnica 710.141	Corner bracket 710.141		4	
Kutna spojnica 710.136	Corner bracket 710.136		4	
Kutna spojnica 731.010	Corner bracket 731.010		4	
Kutna spojnica 710.091	Corner bracket 710.091		2	
Veznik prečke 710.066	T bracket 710.066		6	
Veznik prečke 710.079	T bracket 710.079		6	
Kutna spojnica 730.001	Corner bracket 730.001		10	
Centralna brtva rama 334.005	Central gasket-frame 334.005	1Lkr+2Hkr		
Centralna brtva krila 334.006	Central gasket-sash 334.006	2Lkr+2Hkr		
Brtva 321.006	Rebate gasket 321.006	3Lkr+4Hkr		
Brtva prema staklu vanj. 321.003	Glazing gasket -external-321.003	2Lfix+2H+2Lkr+2Hkr		
Brtva prema staklu unut. 311.004	Glazing gasket -internal- 311.004	2Lfix+2H+2Lkr+2Hkr		
Brtva praga 331.013	Threshold gasket 331.013	L-Lfix-153	1	90-90
Četkica 7x9 347.003	Brush seal 7x9 347.003	Lkr-35	1	90-90
Izolacijski umetak 340.013	Underglass insulator 340.013	2(Lkr-131)+2(Hkr-155)		
Izolacijski umetak 340.013	Underglass insulator 340.013	2(L-91.5)+2(Hpr.-89)		
Čep okapnice F-1200 373.027	End cap for F-1200 373.027		1 par	
Umetak na pragu 373.019	End cap for threshold 373.019		1 par	
Umetak na ramu 374.043	Additional pvc profile 374.043	L-Lfix-61	1	45-45
Umetak na ramu 374.043	Additional pvc profile 374.043	H-44	2	45-90
Brava G-U Secury s MR2 (35) tri klučanja 122.016	Multipoint lock - G-U Secury MR2 (35) -122.016		1	
Prihvatna pločica 24x6x2 122.028	Striking plate 24x6x2 122.028		2	
Prihvatni lim 24x6 (Lijevi) 122.081	Striking plate 24x6 (Left) 122.081		1	
Trodijelna cilindrična šarka 112.011.01 - bijela	Barrel door hinge 112.011.01 - white	2 ili (3) po krilu ovisno o visini i tež.krila 2 or (3) per sash(dep. of height and weight of sash)		
Ručka za vrata 102.028	Door handle 102.028		2	
Četvrtka 102.025	Square spindle 102.025		1	
Cilindar (75+35) 122.095	Cylinder (75+35) 122.095		1	
Štitnik cilindra 122.098	Cylinder rosette 122.098		2	
Protuprovalni umetak 141.002	Security pin 141.002		2	
Staklo 40 mm	Glass 40 mm	(Lfix-87.5)x(H-141.5)	1	
Staklo 40 mm	Glass 40 mm	(Lkr.-155)x(Hkr.-155)	1	

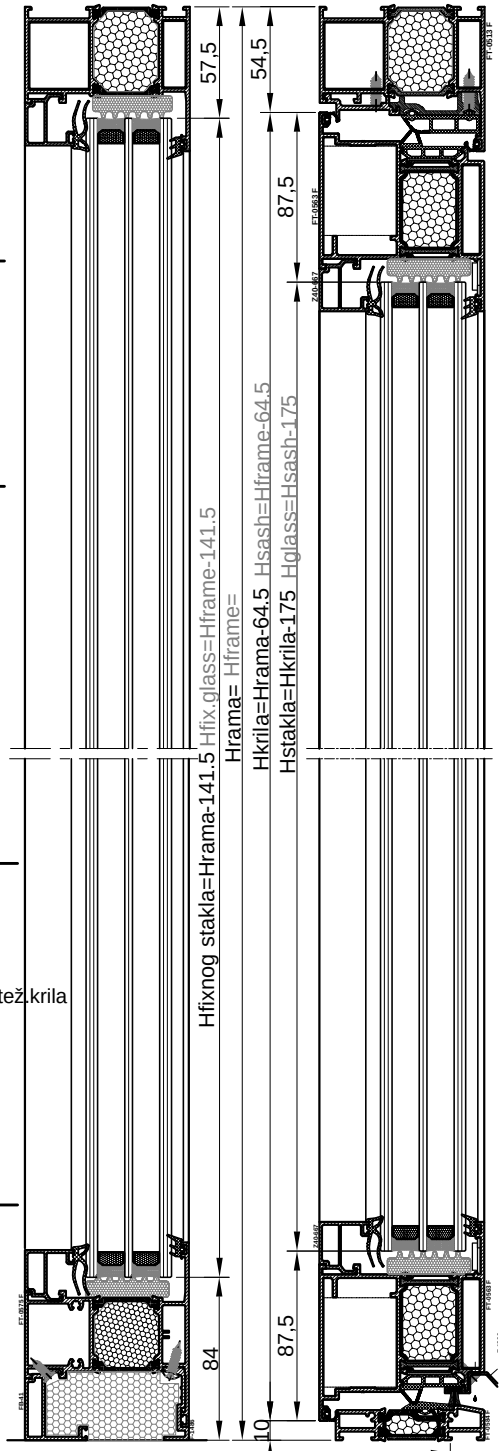


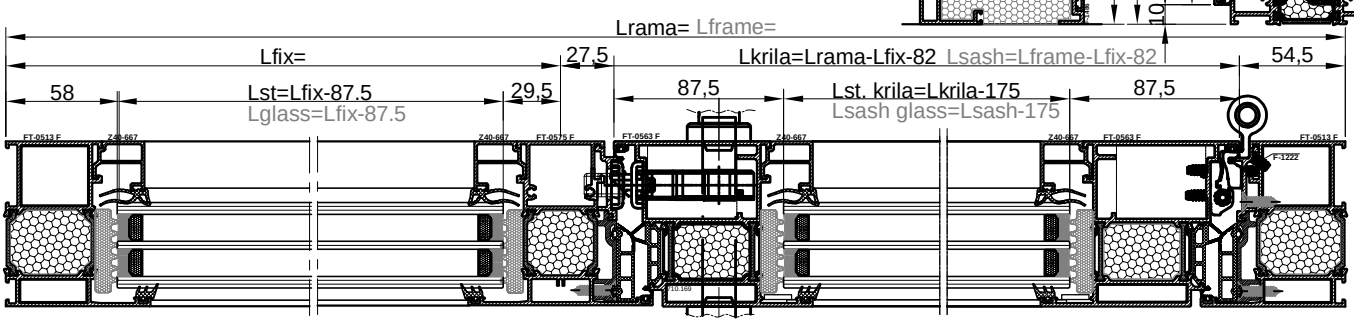


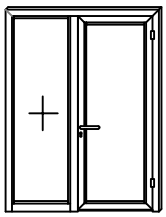


naziv name		mjera dimension	kom. pcs.	pilanje sawing angle
Ram FT-0513F	Frame FT-0513F	L	1	45-45
Ram FT-0513F	Frame FT-0513F	H	2	45-90
Krilo FT-0563F	Sash FT-0561F	L-Lfix-82	2	45-45
Krilo FT-0563F	Sash FT-0561F	H-64.5	2	45-45
Prag FT-0584F	Threshold FT-0584F	L-Lfix-153	1	90-90
Staklo lajsna Z40-667	Glazing bead Z40-667	Lfix-72	2	90-90
Staklo lajsna Z40-667	Glazing bead Z40-667	Lkr-161	2	90-90
Staklo lajsna Z40-667	Glazing bead Z40-667	H-170.5	2	90-90
Staklo lajsna Z40-667	Glazing bead Z40-667	Hkr-205	2	90-90
Prečka FT-0575F	Transom FT-0575F	H-44	1	90-90
Prečka na parap. FT-0575F	Tran.-bottom frame prof.FT-0575F	Lfix-60.5	1	90-90
Umetak rama F-1222	Additional profile F-1222	L-Lfix-62	1	45-45
Umetak rama F-1222	Additional profile F-1222	H-44.5	2	45-90
Umetak FB-41	Additional profile FB-41	Lfix-72	1	90-90
Umetak F-1486	Additional profile F-1486	Lfix-122	1	90-90
Okapnica F-1200	Drip cap profile F-1200	Lkr-54	1	90-90
Kutna spojnica 710.145	Corner bracket 710.145		2	
Kutna spojnica 710.169	Corner bracket 710.169		4	
Kutna spojnica 710.136	Corner bracket 710.136		4	
Kutna spojnica 731.010	Corner bracket 731.010		4	
Kutna spojnica 710.091	Corner bracket 710.091		2	
Veznik prečke 710.066	T bracket 710.066		6	
Veznik prečke 710.079	T bracket 710.079		6	
Kutna spojnica 730.001	Corner bracket 730.001		10	
Centralna brtva rama 334.005	Central gasket-frame 334.005	1Lkr+2Hkr		
Centralna brtva krila 334.006	Central gasket-sash 334.006	2Lkr+2Hkr		
Brtva 321.006	Rebate gasket 321.006	3Lkr+4Hkr		
Brtva prema staklu vanj. 321.003	Glazing gasket -ext.- 321.003	2Lfix+2H+2Lkr+2Hkr		
Brtva prema staklu unut. 311.004	Glazing gasket -internal- 311.004	2Lfix+2H+2Lkr+2Hkr		
Brtva praga 331.013	Threshold gasket 331.013	L-Lfix-153	1	90-90
Četkica 7x9 347.003	Brush seal 7x9 347.003	Lkr-35	1	90-90
Izolacijski umetak 340.013	Underglass insulator 340.013	2(Lkr-151)+2(Hkr-175)		
Izolacijski umetak 340.013	Underglass insulator 340.013	2(L-91.5)+2(Hpr.-89)		
Čep okapnice F-1200 373.027	End cap for F-1200 373.027		1 par	
Umetak na pragu 373.019	End cap for threshold 373.019		1 par	
Umetak na ramu 374.043	Additional pvc profile 374.043	L-Lfix-61	1	45-45
Umetak na ramu 374.043	Additional pvc profile 374.043	H-44	2	45-90
Brava G-U Secury s MR2 (45) tri klučanja 122.015	Multipoint lock - G-U Secury MR2 (45) -122.015		1	
Prihvatna pločica 24x6x2 122.028	Striking plate 24x6x2 122.028		2	
Prihvatni lim 24x6 (Lijevi) 122.081	Striking plate 24x6 (Left) 122.081		1	
Trodijelna cilindrična šarka 112.011.01 - bijela	Barrel door hinge-3 part 112.011.01 - white	2 ili (3) po krilu ovisno o visini i tež.krila 2 or (3) per sash(dep. of height and weight of sash)		
Ručka za vrata 102.028	Door handle 102.028		2	
Cilindar (75+35) 122.095	Cylinder (75+35) 122.095		1	
Štitnik cilindra 122.098	Cylinder rosette 122.098		2	
Protuprovalni umetak 141.002	Security pin 141.002		2	
Četvrtka 102.025	Square spindle 102.025		1	
Staklo 44 mm	Glass 44 mm	(Lfix-87.5)x(H-141.5)	1	
Staklo 44 mm	Glass 44 mm	(Lkr.-175)x(Hkr.-175)	1	

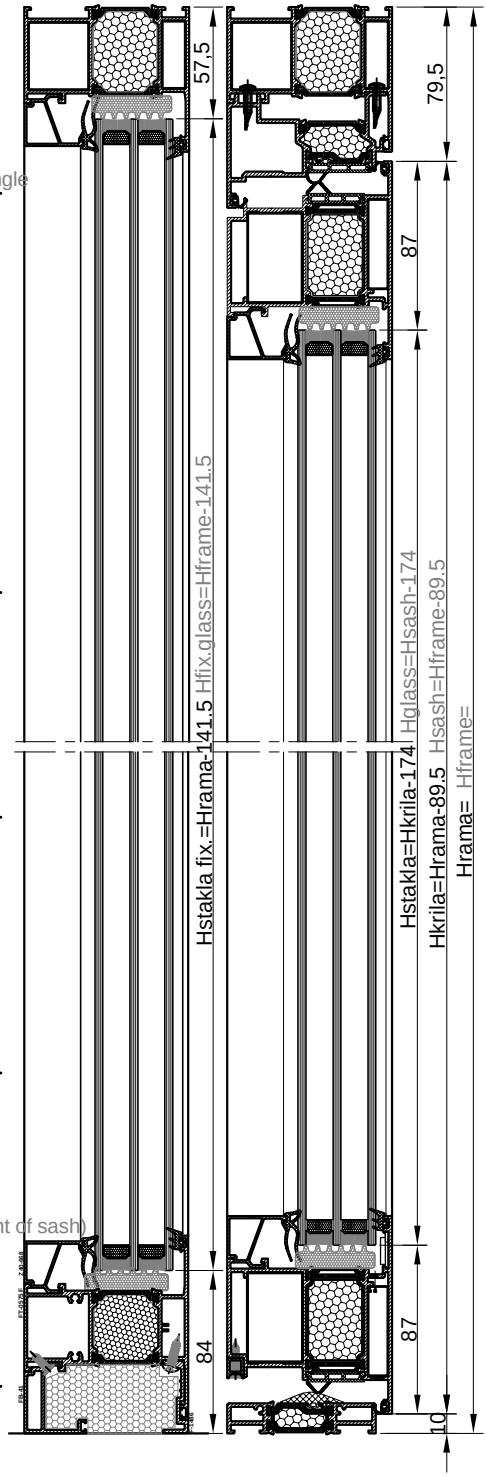


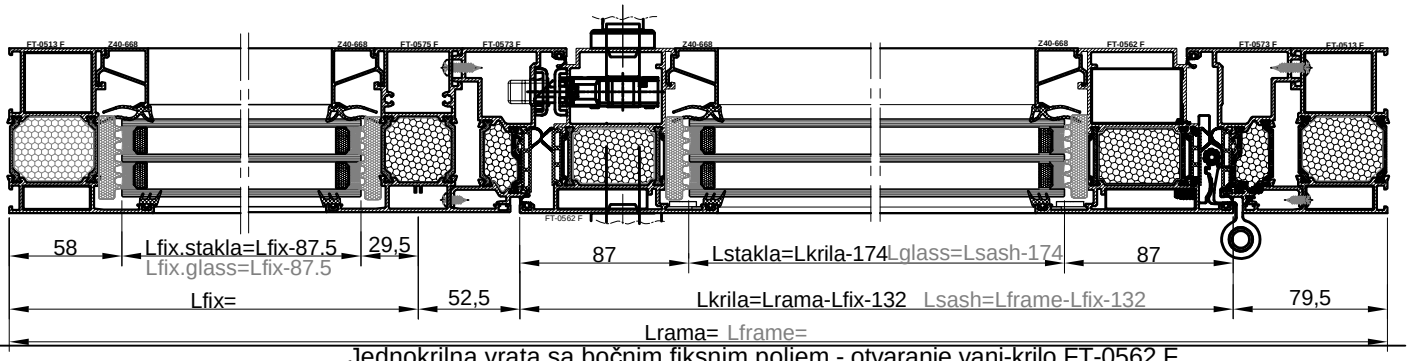


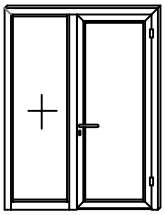




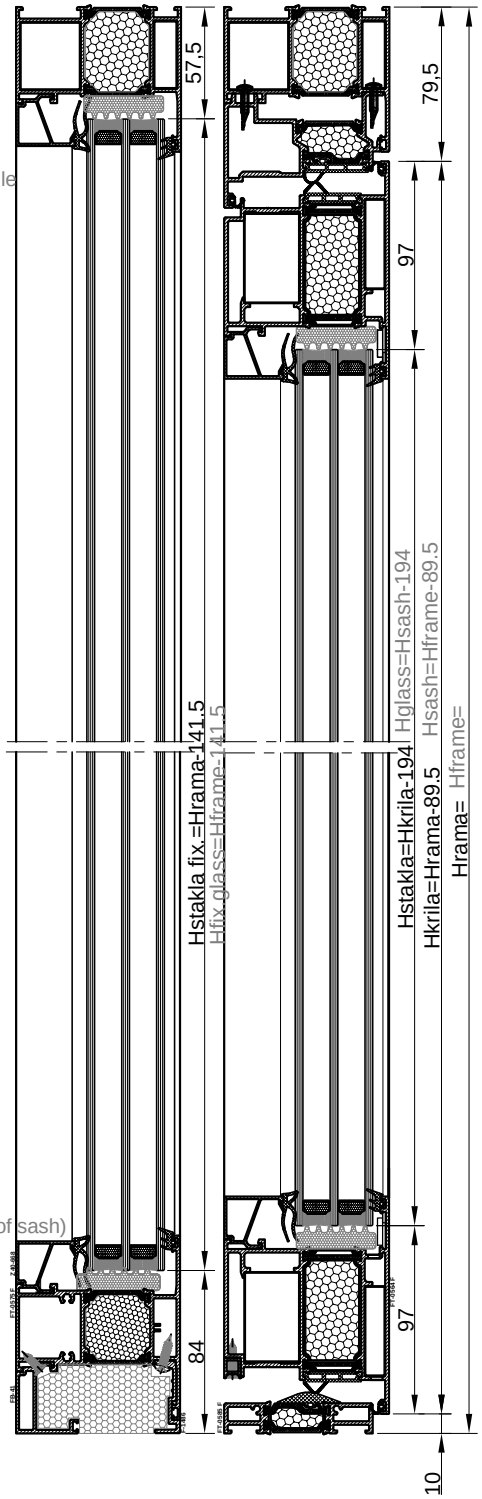
naziv name		mjera dimension	kom. pcs.	pilanje sawing angle
Ram FT-0513F	Frame FT-0513F	L	1	45-45
Ram FT-0513F	Frame FT-0513F	H	2	45-90
Krilo FT-0562F	Sash FT-0562F	L-Lfix-132	2	45-45
Krilo FT-0562F	Sash FT-0562F	H-89.5	2	45-45
Prečka FT-0575F	Transom FT-0575F	H-44	1	90-90
Parapetna prečka FT-0575F	Tran.-bottom frame prof. FT-0575F	Lfix-60.5	1	90-90
Prag FT-0585F	Threshold FT-0585F	L-Lfix-190	1	90-90
Staklo lajsna Z40-668	Glazing bead Z40-668	Lkr-160	2	90-90
Staklo lajsna Z40-668	Glazing bead Z40-668	Lfix-72	2	90-90
Staklo lajsna Z40-668	Glazing bead Z40-668	Hkr-204	2	90-90
Staklo lajsna Z40-668	Glazing bead Z40-668	H-170.5	2	90-90
Umetak FT-0573F	Additional profile FT-0573F	L-Lfix-60.5	1	45-45
Umetak FT-0573F	Additional profile FT-0573F	H-44	2	45-90
Umetak FB-41	Additional profile FB-41	Lfix-72	1	90-90
Umetak F-1486	Additional profile F-1486	Lfix-122	1	90-90
Kutna spojnica 710.145	Corner bracket 710.145		2	
Kutna spojnica 710.133	Corner bracket 710.133		4	
Kutna spojnica 710.091	Corner bracket 710.091		2	
Kutna spojnica 710.134	Corner bracket 710.134		4	
Kutna spojnica 731.010	Corner bracket 731.010		4	
Kutna spojnica 730.001	Corner bracket 730.001		6	
Veznik prečke 710.066	T bracket 710.066		6	
Veznik prečke 710.079	T bracket 710.079		6	
Cent. brtva rama 334.009	Central gasket-frame 334.009	1Lkr+2Hkr		
Cent. brtva krila 334.010	Central gasket-sash 334.010	2Lkr+2Hkr		
Brtva prema st. vanj. 321.003	Glazing gasket -ext.- 321.003	2Lkr+2Hkr+2Lfix+2H		
Brtva prema st. unut. 311.004	Glazing gasket -int.- 311.004	2Lkr+2Hkr+2Lfix+2H		
Brtva 321.006	Rebate gasket 321.006	3Lkr+4Hkr		
Brtva praga 331.012	Threshold gasket 331.012	L-Lfix-190	1	
Izolacijski umetak 340.013	Underglass insulator 340.013	2(Lkr-150)+2(Hkr-174)		
Izolacijski umetak 340.013	Underglass insulator 340.013	2(Lfix-66)+2(H-141.5)		
Umetak na pragu 373.020	End cap for threshold 373.020		1 par	
Brava G-U Secury s MR2 (35) tri klučanja 122.016	Multipoint lock - G-U Secury MR2 (35) -122.016		1	
Prihvatna pločica 24x6x2 122.028	Striking plate 24x6x2 122.028		2	
Prihvatni lim 24x6 (Desni) 122.029	Striking plate 24x6 (right) 122.029		1	
Trodijelna cilindrična šarka 112.012.01 - bijela	Barrel door hinge-3 part 112.012.01 - white	2 ili (3) po krilu ovisno o visini i tež.krila 2 or (3) per sash(dep. of height and weight of sash)		
Ručka za vrata 102.028	Door handle 102.028		2	
Cilindar (75+35) 122.095	Cylinder (75+35) 122.095		1	
Štitnik cilindra 122.098	Cylinder rosette 122.098		2	
Protuprovalni umetak 141.002	Security pin 141.002		2	
Četvrtka 102.025	Square spindle 102.025		1	
Staklo 40 mm	Glass 40 mm	(Lfix-87.5)x(H-141.5)	1	
Staklo 40 mm	Glass 40 mm	(Lkr.-174)x(Hkr-174)	1	

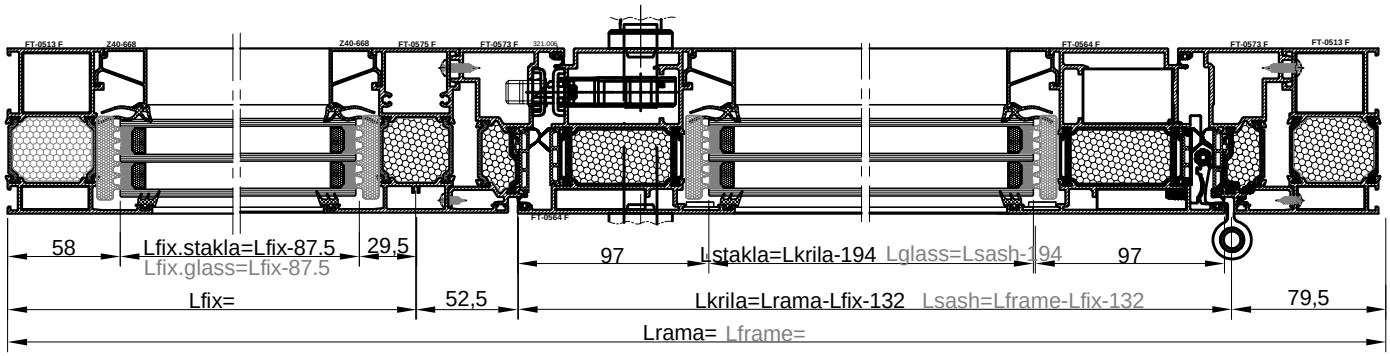


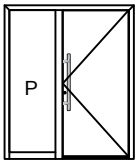




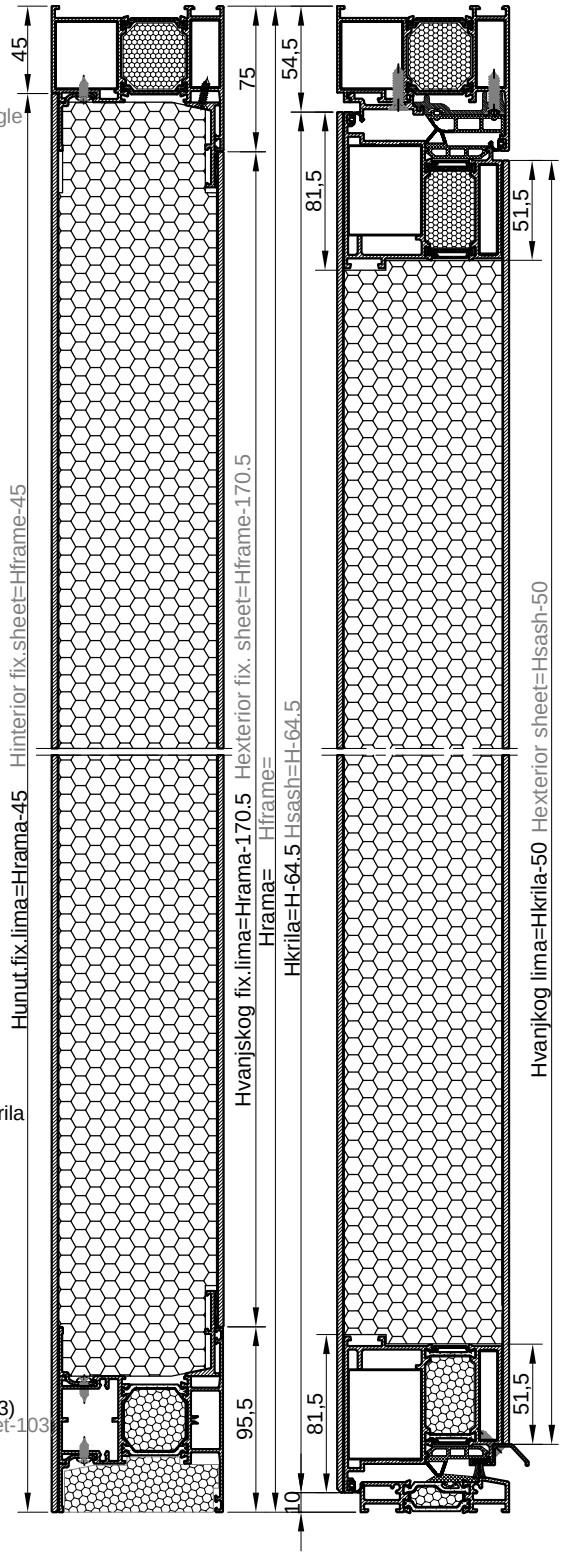
naziv name		mjera dimension	kom. pcs.	pilanje sawing angle
Ram FT-0513F	Frame FT-0513F	L	1	45-45
Ram FT-0513F	Frame FT-0513F	H	2	45-90
Krilo FT-0564F	Sash FT-0564F	L-Lfix-132	2	45-45
Krilo FT-0564F	Sash FT-0564F	H-89.5	2	45-45
Prečka FT-0575F	Transom FT-0575F	H-44	1	90-90
Parapetna prečka FT-0575F	Tran.-bottom frame prof.FT-0575F	Lfix-60.5	1	90-90
Prag FT-0585F	Threshold FT-0585F	L-Lfix-190	1	90-90
Staklo lajsna Z40-668	Glazing bead Z40-668	Lkr-180	2	90-90
Staklo lajsna Z40-668	Glazing bead Z40-668	Lfix-72	2	90-90
Staklo lajsna Z40-668	Glazing bead Z40-668	Hkr-224	2	90-90
Staklo lajsna Z40-668	Glazing bead Z40-668	H-170.5	2	90-90
Umetak FT-0573F	Additional profile FT-0573F	L-Lfix-60.5	1	45-45
Umetak FT-0573F	Additional profile FT-0573F	H-44	2	45-90
Umetak FB-41	Additional profile FB-41	Lfix-72	1	90-90
Umetak F-1486	Additional profile F-1486	Lfix-122	1	90-90
Kutna spojnica 710.145	Corner bracket 710.145		2	
Kutna spojnica 710.133	Corner bracket 710.133		4	
Kutna spojnica 710.091	Corner bracket 710.091		2	
Kutna spojnica 710.134	Corner bracket 710.134		4	
Kutna spojnica 731.010	Corner bracket 731.010		4	
Kutna spojnica 730.001	Corner bracket 730.001		6	
Veznik prečke 710.066	T bracket 710.066		6	
Veznik prečke 710.079	T bracket 710.079		6	
Cent. brtva rama 334.009	Central gasket-frame 334.009	1Lkr+2Hkr		
Cent. brtva krila 334.010	Central gasket-sash 334.010	2Lkr+2Hkr		
Brtva prema st. vanj. 321.003	Glazing gasket -ext.- 321.003	2Lkr+2Hkr+2Lfix+2H		
Brtva prema st. unut. 311.004	Glazing gasket -int.- 311.004	2Lkr+2Hkr+2Lfix+2H		
Brtva 321.006	Rebate gasket 321.006	3Lkr+4Hkr		
Brtva praga 331.012	Threshold gasket 331.012	L-Lfix-190	1	
Izolacijski umetak 340.013	Underglass insulator 340.013	2(Lkr-170)+2(Hkr-194)		
Izolacijski umetak 340.013	Underglass insulator 340.013	2(Lfix-66)+2(H-141.5)		
Umetak na pragu 373.020	End cap for threshold 373.020		1 par	
Brava G-U Secury s MR2 (45) tri ključanja 122.015	Multipoint lock - G-U Secury MR2 (45) -122.015		1	
Prihvatna pločica 24x6x2 122.028	Striking plate 24x6x2 122.028		2	
Prihvatni lim 24x6 (Desni) 122.029	Striking plate 24x6 (right) 122.029		1	
Trodijelna cilindrična šarka 112.012.01 - bijela	Barrel door hinge 112.012.01 - white	2 ili (3) po krilu ovisno o visini i tež.krila 2 or (3) per sash(dep. of height and weight of sash)		
Ručka za vrata 102.028	Door handle 102.028		2	
Cilindar (75+35) 122.095	Cylinder (75+35) 122.095		1	
Štitnik cilindra 122.098	Cylinder rosette 124.098		2	
Protuprovalni umetak 141.002	Security pin 141.002		2	
Četvrtka 102.025	Square spindle 102.025		1	
Staklo 40 mm	Glass 40 mm	(Lfix-87.5)x(H-141.5)	1	
Staklo 40 mm	Glass 40 mm	(Lkr.-194)x(Hkr-194)	1	

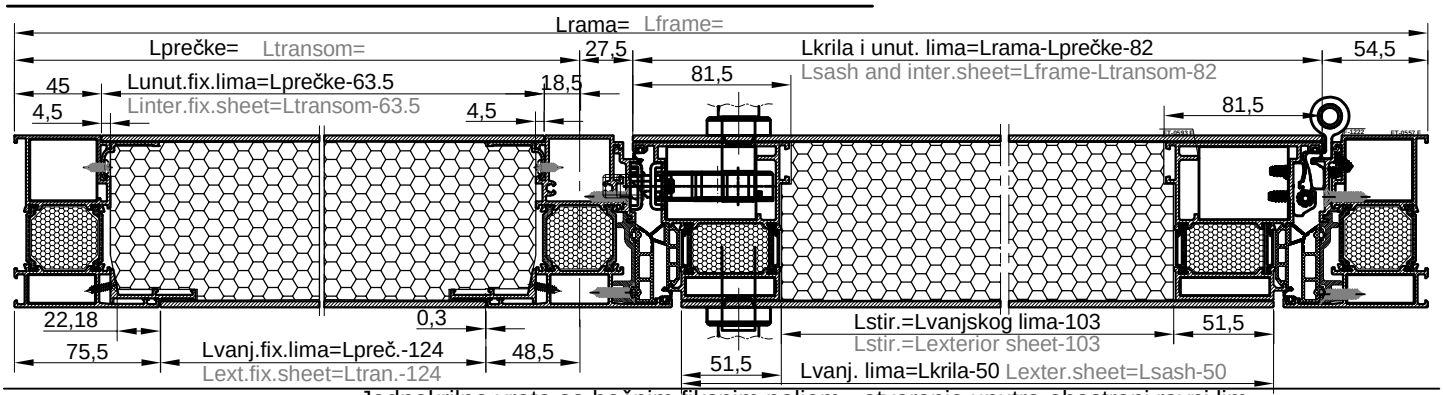


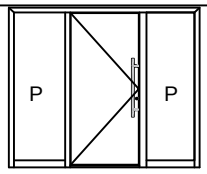




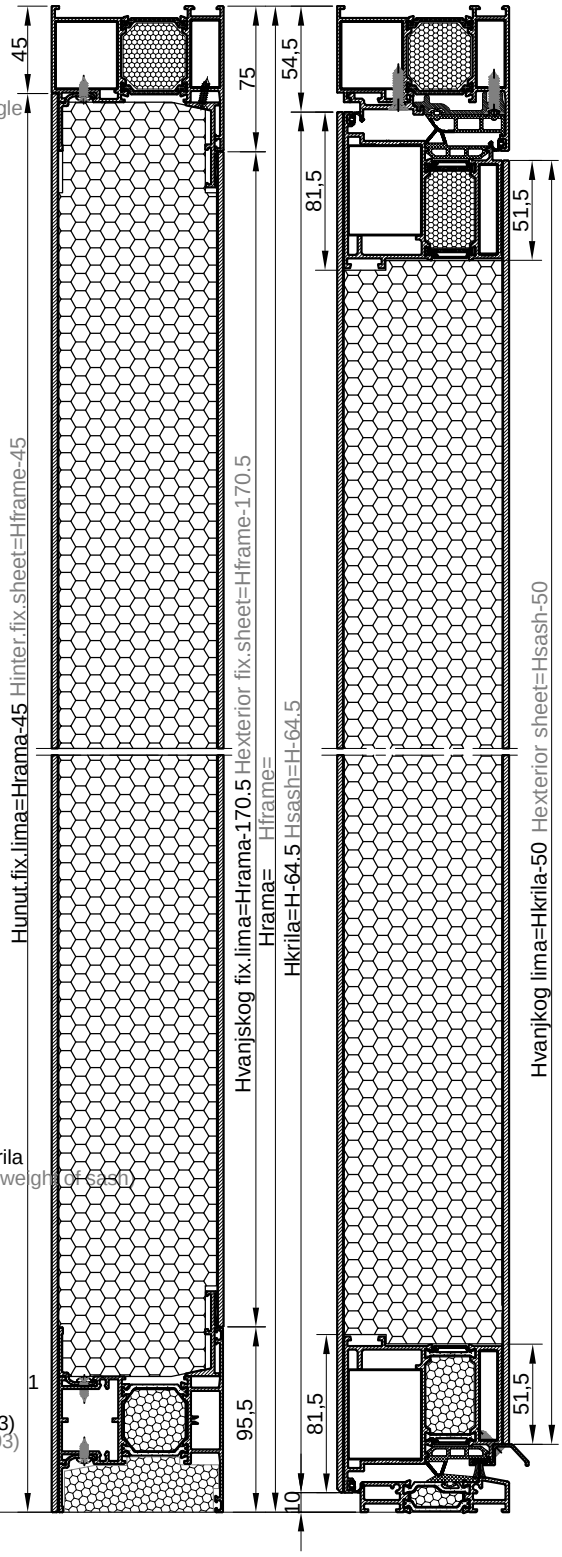
naziv name		mjera dimension	kom. pcs.	pilanje sawing angle
Ram FT-0557F	Frame FT-0557F	L	1	45-45
Ram FT-0557F	Frame FT-0557F	H	2	45-90
Krilo FT-0593F	Sash FT-0593F	L-Lpreč.-82	2	45-45
Krilo FT-0593F	Sash FT-0593F	H-64.5	2	45-45
Prag FT-0584F	Threshold FT-0584F	L-Lpreč.-147.5	1	90-90
Prečka FT-0577F	Transom FT-0577F	Lpreč.-62	1	90-90
Prečka FT-0580F	Transom FT-0580F	H-44.5	1	90-90
Okapnica F-1200	Drip cap profile F-1200	Lkr-54	1	90-90
Al profil F-1222	Al profile F-1222	L-Lpreč.-62	1	45-45
Al profil F-1222	Al profile F-1222	H-44.5	2	45-90
Staklo lajsna F-1544	Glazing bead F-1544	Lpreč.-72	3	90-90
Staklo lajsna F-1544	Glazing bead F-1544	H-169.5	2	90-90
Al umetak F-1543	Additional profile F-1543	Lpreč.-72	2	90-90
Al umetak F-1543	Additional profile F-1543	H-207	2	90-90
Kutna spojnica 710.126	Corner bracket 710.126		2	
Kutna spojnica 710.173	Corner bracket 710.173		2	
Kutna spojnica 710.136	Corner bracket 710.136		4	
Kutna spojnica 710.169	Corner bracket 710.169		4	
Kutna spojnica 730.001	Corner bracket 730.001		6	
Veznik 710.082	T bracket 710.082		3	
Veznik 710.083	T bracket 710.083		3	
Centralna brtva rama 334.005	Cent.gask.-frame 334.005	1Lkr+2Hkr		
Centralna brtva krila 334.006	Cent. gask.-sash 334.006	2Lkr+2Hkr		
Brtva 321.006	Rebate gasket 321.006	3Lkr+4Hkr		
Brtva praga 331.013	Threshold gasket 331.013	L-Lpreč.-147.5	1	90-90
Četkica 7x9 347.003	Brush seal 7x9 347.003	Lkr-35	1	90-90
Čep okapnice F-1200 373.027	End cap for F-1200 373.027		1 par	
Umetak na pragu 373.019	End cap for threshold 373.019		1 par	
Umetak na ramu 374.043	Add. pvc profile 374.043	L-Lpreč.-61	1	45-45
Umetak na ramu 374.043	Add. pvc profile 374.043	H-44	2	45-90
Brava G-U Secury s MR2 (45) tri klučanja 122.015	Multipoint lock - G-U Secury MR2 (45) -122.015		1	
Prihvatna pločica 24x6x2 122.028	Striking plate 24x6x2 122.028		2	
Prihvatni lim 24x6 (Lijevi) 122.081	Striking plate 24x6 (Left) 122.081		1	
Trodijelna cilindrična šarka 112.011.01 - bijela	Barrel door hinge-3 part 112.011.01 - white	2 ili (3) po krilu ovisno o visini i tež.krila 2 or (3) per sash(dep. of height and weight of sash)		
Ručka za vrata 102.028	Door handle 102.028		2	
Cilindar (75+35) 122.095	Cylinder (75+35) 122.095		1	
Štitnik cilindra 122.098	Cylinder rosette 122.098		2	
Protuprovalni umetak 141.002	Security pin 141.002		2	
Četvrtka 102.025	Square spindle 102.025		1	
Vanjski lim panela krila 3 mm	Exterior sheet 3 mm	(Lkr.-50)x(Hkr.-50)	1	
Unutarnji lim panela krila 3 mm	Int. sheet sash panel 3 mm	LkrxHkr	1	
Stirodur u krilu (ispuna panela 81.4 mm)	Stirodur in sash (panel 81.4 mm)	(Lvanj.lima-103)x(Hvanj.lima-103) (Lexter.sheet-103)x(Hexter.sheet-103)		
Vanjski lim panela fixnog 3 mm	Exterior sheet pan. fix.3 mm	(Lpreč.-124)x(H-170.5)	1	
Unutarnji lim panela fixnog 3 mm	Interior sheet pan.fix. 3 mm	(Lpreč.-63.5)x(H-45)	1	
Stirodur u fixnom (ispuna panela 81.4 mm)	Stirodur in fixed part (panel 81.4 mm)	(Lpreč.-73)x(H-121) (Ltran.-73)x(H-121)		

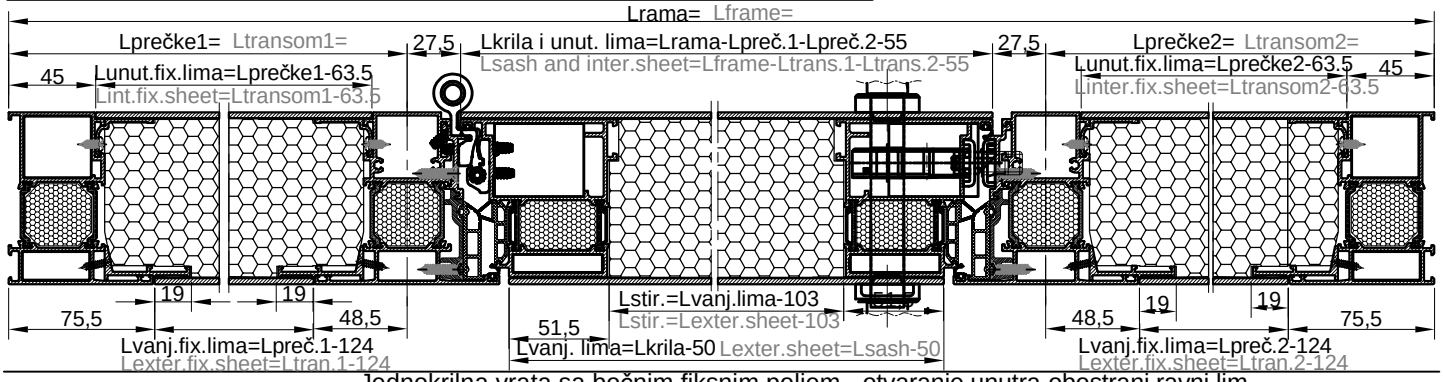






naziv name		mjera dimension	kom. pcs.	pilanje sawing angle
Ram FT-0557F	Frame FT-0557F	L	1	45-45
Ram FT-0557F	Frame FT-0557F	H	2	45-90
Krilo FT-0593F	Sash FT-0593F	L-Lpeč.1-Lpreč.2-55	2	45-45
Krilo FT-0593F	Sash FT-0593F	H-64.5	2	45-45
Prag FT-0584F	Threshold FT-0584F	L-Lpreč.1-Lpreč.2-126	1	90-90
Prečka FT-0577F	Transom FT-0577F	Lpreč.1-62	1	90-90
Prečka FT-0577F	Transom FT-0577F	Lpreč.2-62	1	90-90
Prečka FT-0580F	Transom FT-0580F	H-44.5	2	90-90
Okapnica F-1200	Drip cap profile F-1200	Lkr-54	1	90-90
Al profil F-1222	Al profile F-1222	L-Lpreč.1-Lpreč.2-35	1	45-45
Al profil F-1222	Al profile F-1222	H-44.5	2	45-90
Staklo lajsna F-1544	Glazing bead F-1544	Lpreč.1-72	3	90-90
Staklo lajsna F-1544	Glazing bead F-1544	Lpreč.2-72	3	90-90
Staklo lajsna F-1544	Glazing bead F-1544	H-176.5	2	90-90
Al umetak F-1543	Additional profile F-1543	Lpreč.1-72	2	90-90
Al umetak F-1543	Additional profile F-1543	Lpreč.2-72	2	90-90
Al umetak F-1543	Additional profile F-1543	H-214	4	90-90
Kutna spojnica 710.126	Corner bracket 710.126		2	
Kutna spojnica 710.173	Corner bracket 710.173		2	
Kutna spojnica 710.136	Corner bracket 710.136		4	
Kutna spojnica 710.169	Corner bracket 710.169		4	
Kutna spojnica 730.001	Corner bracket 730.001		6	
Veznik 710.082	T bracket 710.082		3	
Veznik 710.083	T bracket 710.083		3	
Centralna brtva rama 334.005	Cent. gask.-frame 334.005	1Lkr+2Hkr		
Centralna brtva krila 334.006	Cent. gask.-sash 334.006	2Lkr+2Hkr		
Brtva 321.006	Rebate gasket 321.006	3Lkr+4Hkr		
Brtva praga 331.013	Threshold gasket 331.013	L-Lpreč.-147.5	1	90-90
Četkica 7x9 347.003	Brush seal 7x9 347.003	Lkr-35	1	90-90
Čep okapnice F-1200 373.027	End cap for F-1200 373.027		1 par	
Umetak na pragu 373.019	End cap for threshold 373.019		1 par	
Umetak na ramu 374.043	Add. pvc profile 374.043	L-Lpreč.-61	1	45-45
Umetak na ramu 374.043	Add. pvc profile 374.043	H-44	2	45-90
Brava G-U Secury s MR2 (45) tri klučanja 122.015	Multipoint lock - G-U Secury MR2 (45) -122.015		1	
Prihvatna pločica 24x6x2 122.028	Striking plate 24x6x2 122.028		2	
Prihvatni lim 24x6 (Lijevi) 122.081	Striking plate 24x6 (Left) 122.081		1	
Trodijelna cilindrična šarka 112.011.01 - bijela	Barrel door hinge-3 part 112.011.01 - white	2 ili (3) po krilu ovisno o visini i tež.krila 2 or (3) per sash(dep. of height and weight of sash)		
Ručka za vrata 102.028	Door handle 102.028		2	
Cilindar (75+35) 122.095	Cylinder (75+35) 122.095		1	
Štitnik cilindra 122.098	Cylinder rosette 122.098		2	
Protuprovalni umetak 141.002	Security pin 141.002		2	
Četvrtka 102.025	Square spindle 102.025		1	
Vanjski lim panela krila 3 mm	Exterior sheet 3 mm	(Lkr.-50)x(Hkr.-50)	1	
Unutarnji lim panela krila 3 mm	Inter.sheet pan.sash 3 mm	LkrxHkr	1	
Stirodur u krilu (ispuna panela 81.4 mm)	Stirodur in sash (panel 81.4 mm)	(Lvanj.lima-103)x(Hvanj.lima-103) (Lext.sheet-103)x(Hext.sheet-103)		
Vanjski lim panela fixnog 3 mm	Exter. panel. fix. 3 mm	(Lpreč.-124)x(H-170.5)	1	
Unutarnji lim panela fixnog 3 mm	Inter. sheet pan.fix. 3 mm	(Lpreč.-63.5)x(H-45	1	
Stirodur u fixnom (ispuna panela 81.4 mm)	Stirodur in fixed part (panela 81.4 mm)	(Lpreč.-73)x(H-121) (Ltran.-73)x(H-121)		

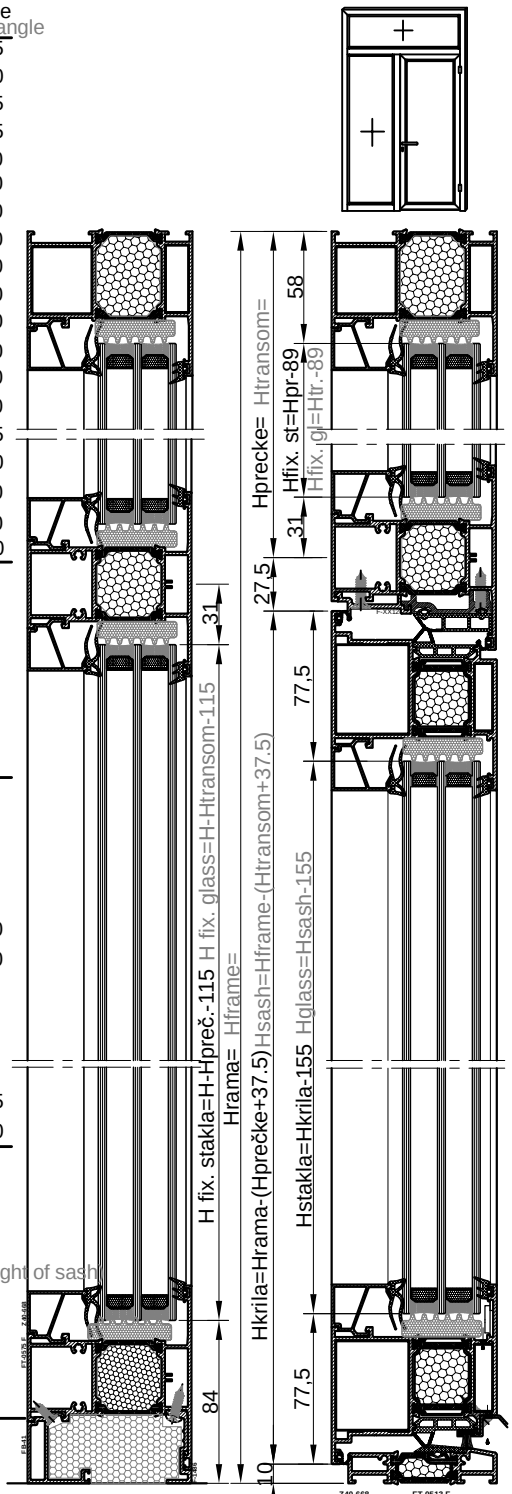


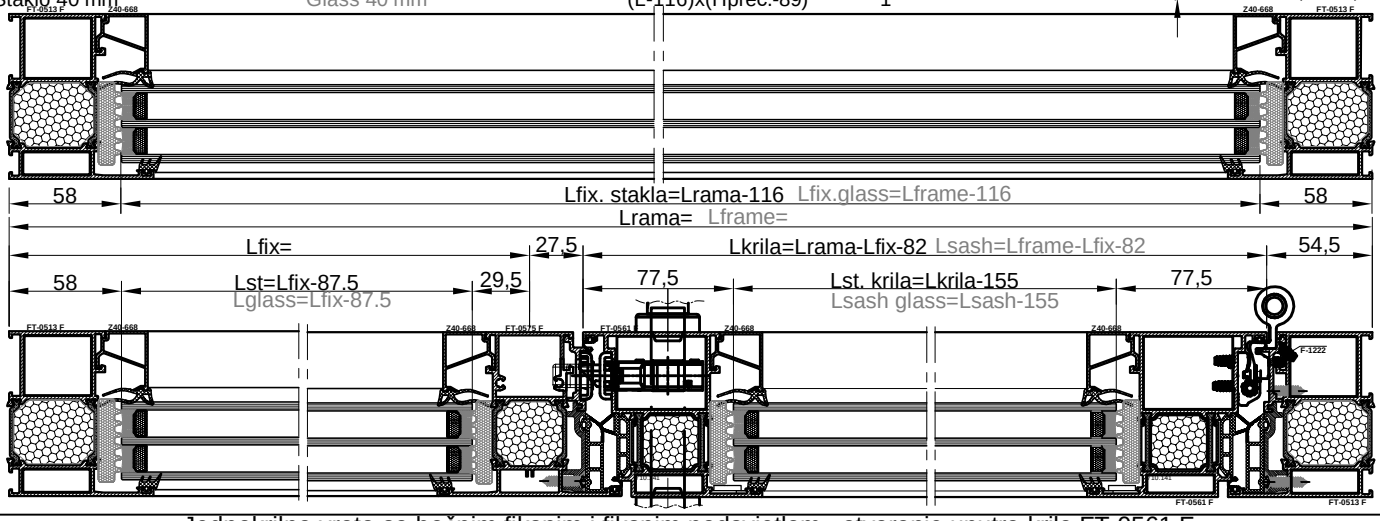


Jednokrilna vrata sa bočnim fiksnim poljem i nadsvjetlom

Single-leaf door with side fixed field and top light

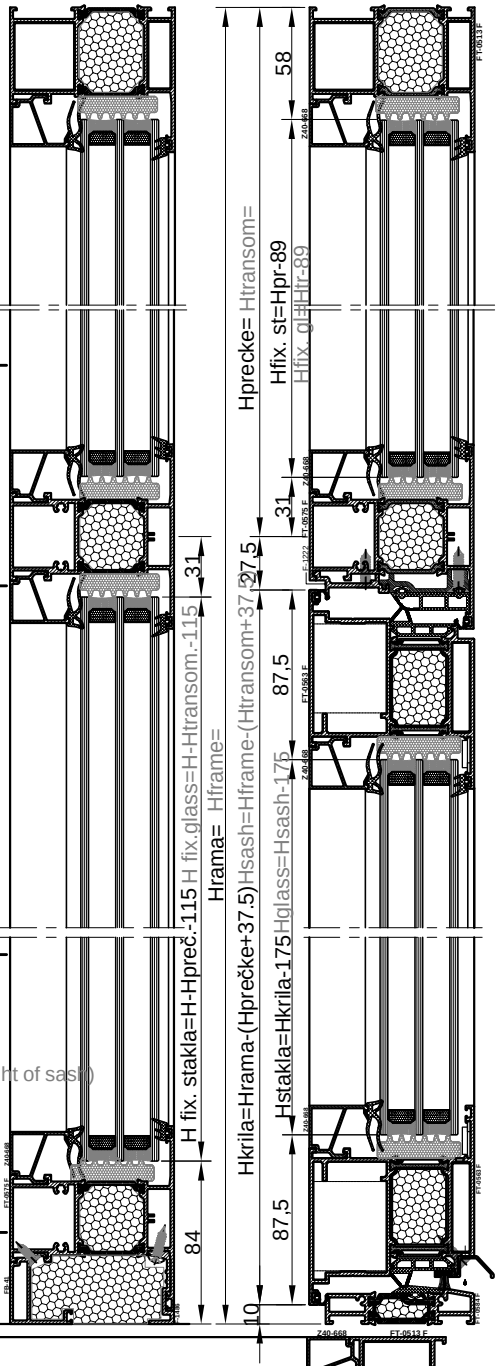
naziv name		mjera dimension	kom. pcs.	pilanje sawing angle
Ram FT-0513F	Frame FT-0513F	L	1	45-45
Ram FT-0513F	Frame FT-0513F	H	2	45-90
Krilo FT-0561F	Sash FT-0561F	L-Lfix-82	2	45-45
Krilo FT-0561F	Sash FT-0561F	H-(Hpr.+37.5)	2	45-45
Prag FT-0584F	Threshold FT-0584F	L-Lfix-153	1	90-90
Staklo lajsna Z40-668	Glazing bead Z40-668	Lfix-72	2	90-90
Staklo lajsna Z40-668	Glazing bead Z40-668	Lkr-141	2	90-90
Staklo lajsna Z40-668	Glazing bead Z40-668	L-99	2	90-90
Staklo lajsna Z40-668	Glazing bead Z40-668	H-Hpreč.-143.5)	2	90-90
Staklo lajsna Z40-668	Glazing bead Z40-668	Hkr-185	2	90-90
Staklo lajsna Z40-668	Glazing bead Z40-668	Hpreč.-116	2	90-90
Prečka FT-0575F	Transom FT-0575F	L-88	1	90-90
Prečka FT-0575F	Transom FT-0575F	H-Hpreč.-17.5	1	90-90
Prečka na parap. FT-0575F	Tran.-bottom frame prof FT-0575F	Lfix-60.5	1	90-90
Umetak rama F-1222	Additional profile F-1222	L-Lfix-62	1	45-45
Umetak rama F-1222	Additional profile F-1222	H-Hpreč.-18	2	45-90
Umetak FB-41	Additional profile FB-41	Lfix-72	1	90-90
Umetak F-1486	Additional profile F-1486	Lfix-122	1	90-90
Okapnica F-1200	Drip cap profile F-1200	Lkr-54	1	90-90
Kutna spojnica 710.145	Corner bracket 710.145		2	
Kutna spojnica 710.141	Corner bracket 710.141		4	
Kutna spojnica 710.136	Corner bracket 710.136		4	
Kutna spojnica 731.010	Corner bracket 731.010		4	
Kutna spojnica 710.091	Corner bracket 710.091		2	
Veznik prečke 710.066	T bracket 710.066		6	
Veznik prečke 710.079	T bracket 710.079		6	
Kutna spojnica 730.001	Corner bracket 730.001		10	
Centralna brtva rama 334.005	Central gasket-frame 334.005	1Lkr+2Hkr		
Centralna brtva krila 334.006	Central gasket-sash 334.006	2Lkr+2Hkr		
Brtva 321.006	Rebate gasket 321.006	3Lkr+4Hkr		
Brtva prema staklu vanj. 321.003	Glazing gasket -ext.- 321.003	2Lfix+2H+2Lkr+2Hkr+2L		
Brtva prema staklu unut. 311.004	Glazing gasket -internal- 311.004	2Lfix+2H+2Lkr+2Hkr+2L		
Brtva praga 331.013	Threshold gasket 331.013	L-Lfix-153	1	90-90
Četkica 7x9 347.003	Brush seal 7x9 347.003	Lkr-35	1	90-90
Izolacijski umetak 340.013	Underglass insulator 340.013	2(Lkr-131)+2(Hkr-155)		
Izolacijski umetak 340.013	Underglass insulator 340.013	2(L-91.5)+2(Hpr.-89)		
Čep okapnice F-1200 373.027	End cap for F-1200 373.027		1 par	
Umetak na pragu 373.019	End cap for threshold 373.019		1 par	
Umetak na ramu 374.043	Additional pvc profile 374.043	L-Lfix-61	1	45-45
Umetak na ramu 374.043	Additional pvc profile 374.043	H-Hpreč.-17	2	45-90
Brava G-U Secury s MR2 (35) tri ključanja 122.016	Multipoint lock - G-U Secury MR2 (35) -122.016		1	
Prihvatna pločica 24x6x2 122.028	Striking plate 24x6x2 122.028		2	
Prihvatni lim 24x6 (Lijevi) 122.081	Striking plate 24x6 (Left) 122.081		1	
Trodijelna cilindrična šarka 112.011.01 - bijela	Barrel door hinge-3 part 112.011.01 - white	2 ili (3) po krilu ovisno o visini i tež.krila 2 or (3) per sash(dep. of height and weight of sash		
Ručka za vrata 102.028	Door handle 102.028		2	
Cilindar (75+35) 122.095	Cylinder (75+35) 122.095		1	
Štitnik cilindra 122.098	Cylinder rosette 122.098		2	
Četvrtka 102.025	Square spindle 102.025		1	
Protuprovalni umetak 141.002	Security pin 141.002		2	
Staklo 40 mm	Glass 40 mm	(Lfix-87.5)x(Hpreč.-115)	1	
Staklo 40 mm	Glass 40 mm	(Lkr.-155)x(Hkr.-155)	1	
Staklo 40 mm	Glass 40 mm	(L-116)x(Hpreč.-89)	1	

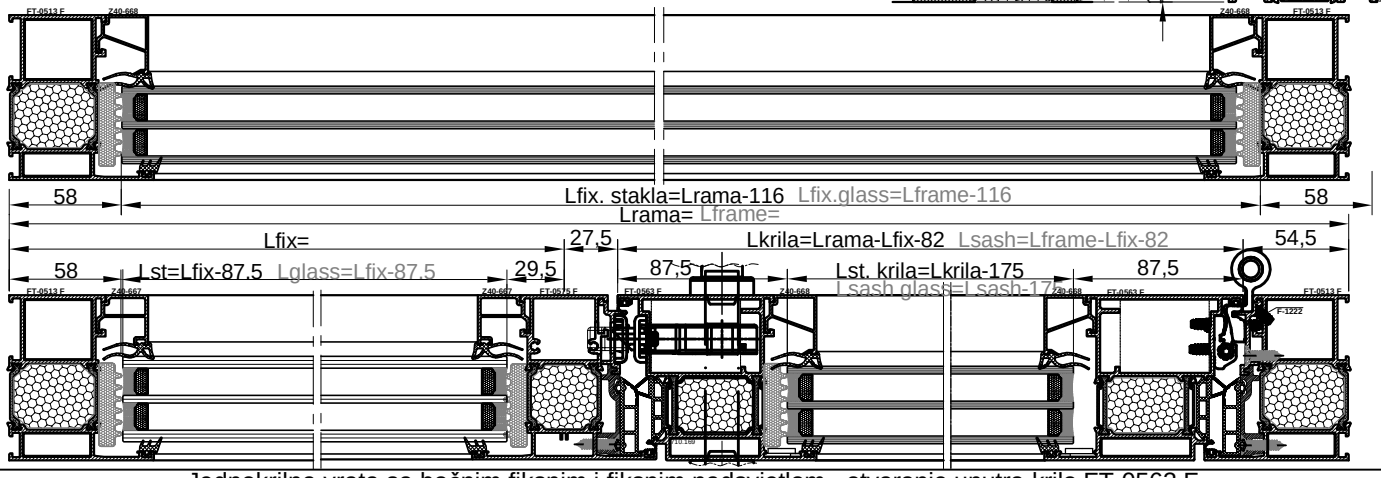




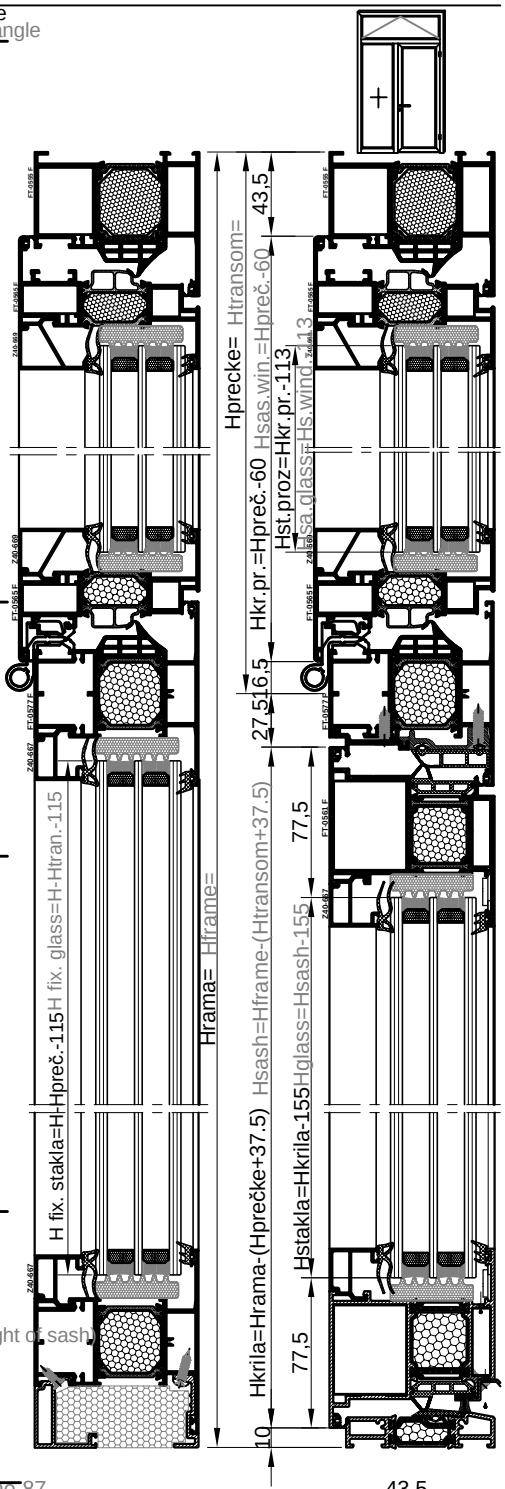
naziv name		mjera dimension	kom. pcs.	pilanje sawing angle
Ram FT-0513F	Frame FT-0513F	L	1	45-45
Ram FT-0513F	Frame FT-0513F	H	2	45-90
Krilo FT-0563F	Sash FT-0563F	L-Lfix-82	2	45-45
Krilo FT-0563F	Sash FT-0563F	H-(Hpr.+37.5)	2	45-45
Prag FT-0584F	Threshold FT-0584F	L-Lfix-153	1	90-90
Staklo lajsna Z40-668	Glazing bead Z40-668	Lfix-72	2	90-90
Staklo lajsna Z40-668	Glazing bead Z40-668	Lkr-161	2	90-90
Staklo lajsna Z40-668	Glazing bead Z40-668	L-99	2	90-90
Staklo lajsna Z40-668	Glazing bead Z40-668	H-Hpreč.-143.5	2	90-90
Staklo lajsna Z40-668	Glazing bead Z40-668	Hkr-205	2	90-90
Staklo lajsna Z40-668	Glazing bead Z40-668	Hpreč.-116	2	90-90
Prečka FT-0575F	Transom FT-0575F	L-88	1	90-90
Prečka FT-0575F	Transom FT-0575F	H-Hpreč.-17.5	1	90-90
Prečka na parap. FT-0575F	Tran.-bottom frame prof. FT-0575F	Lfix-60.5	1	90-90
Umetak rama F-1222	Additional profile F-1222	L-Lfix-62	1	45-45
Umetak rama F-1222	Additional profile F-1222	H-Hpreč.-18	2	45-90
Umetak FB-41	Additional profile FB-41	Lfix-72	1	90-90
Umetak F-1486	Additional profile F-1486	Lfix-122	1	90-90
Okapnica F-1200	Drip cap profile F-1200	Lkr-54	1	90-90
Kutna spojnica 710.145	Corner bracket 710.145		2	
Kutna spojnica 710.169	Corner bracket 710.169		4	
Kutna spojnica 710.136	Corner bracket 710.136		4	
Kutna spojnica 731.010	Corner bracket 731.010		4	
Kutna spojnica 710.091	Corner bracket 710.091		2	
Veznik prečke 710.066	T bracket 710.066		6	
Veznik prečke 710.079	T bracket 710.079		6	
Kutna spojnica 730.001	Corner bracket 730.001		10	
Centralna brtva rama 334.005	Central gasket-frame 334.005	1Lkr+2Hkr		
Centralna brtva krila 334.006	Central gasket-sash 334.006	2Lkr+2Hkr		
Brtva 321.006	Rebate gasket 321.006	3Lkr+4Hkr		
Brtva prema staklu vanj. 321.003	Glazing gasket -ext.- 321.003	2Lfix+2H+2Lkr+2Hkr+2L		
Brtva prema staklu unut. 311.004	Glazing gasket -internal- 311.004	2Lfix+2H+2Lkr+2Hkr+2L		
Brtva praga 331.013	Threshold gasket 331.013	L-Lfix-153	1	90-90
Četkica 7x9 347.003	Brush seal 7x9 347.003	Lkr-35	1	90-90
Izolacijski umetak 340.013	Underglass insulator 340.013	2(Lkr-151)+2(Hkr-175)		
Izolacijski umetak 340.013	Underglass insulator 340.013	2(L-91.5)+2(Hpr.-89)		
Čep okapnice F-1200 373.027	End cap for F-1200 373.027		1 par	
Umetak na pragu 373.019	End cap for threshold 373.019		1 par	
Umetak na ramu 374.043	Additional pvc profile 374.043	L-Lfix-61	1	45-45
Umetak na ramu 374.043	Additional pvc profile 374.043	H-Hpreč.-17	2	45-90
Brava G-U Secury s MR2 (45) tri ključanja 122.015	Multipoint lock - G-U Secury MR2 (45) -122.015		1	
Prihvatna pločica 24x6x2 122.028	Striking plate 24x6x2 122.028		2	
Prihvatni lim 24x6 (Lijevi) 122.081	Striking plate 24x6 (Left) 122.081		1	
Trodijelna cilindrična šarka 112.011.01 - bijela	Barrel door hinge-3 part 112.011.01 - white	2 ili (3) po krilu ovisno o visini i tež.krila 2 or (3) per sash(dep. of height and weight of sash)		
Ručka za vrata 102.028	Door handle 102.028		2	
Cilindar (75+35) 122.095	Cylinder (75+35) 122.095		1	
Štitnik cilindra 122.098	Cylinder rosette 122.098		2	
Četvrtka 102.025	Square spindle 102.025		1	
Protuprovalni umetak 141.002	Security pin 141.002		2	
Staklo 40 mm	Glass 40 mm	(Lfix-87.5)x(Hpreč.-115)	1	
Staklo 40 mm	Glass 40 mm	(Lkr.-175)x(Hkr.-205)	1	
Staklo 40 mm	Glass 40 mm	(L-116)x(Hpreč.-89)	1	

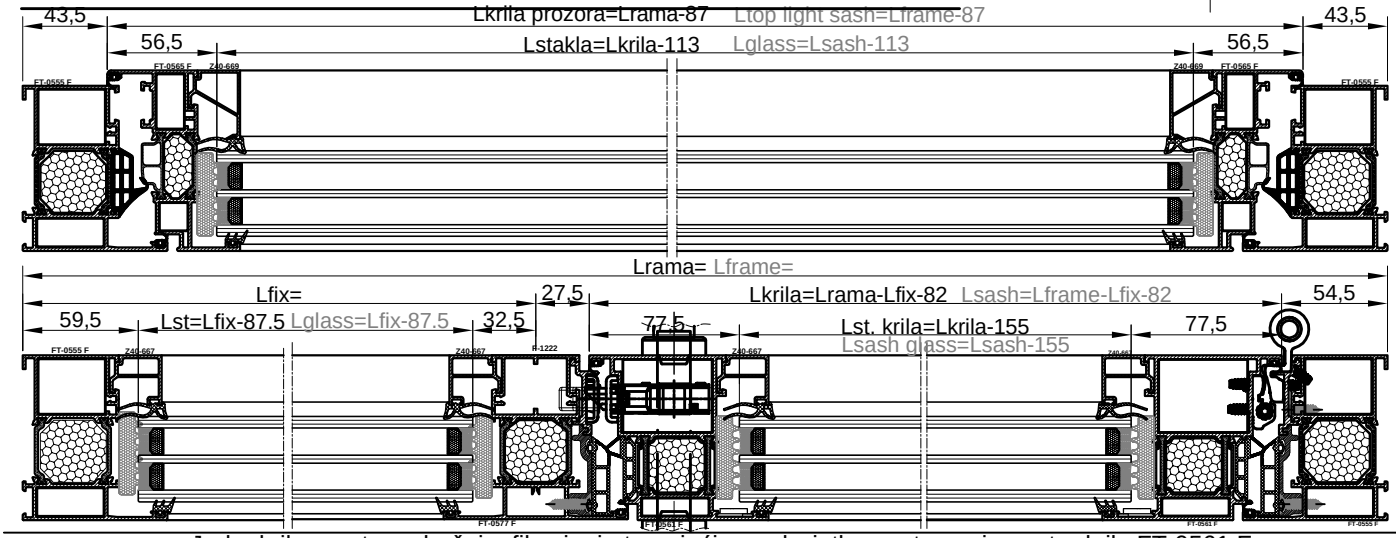




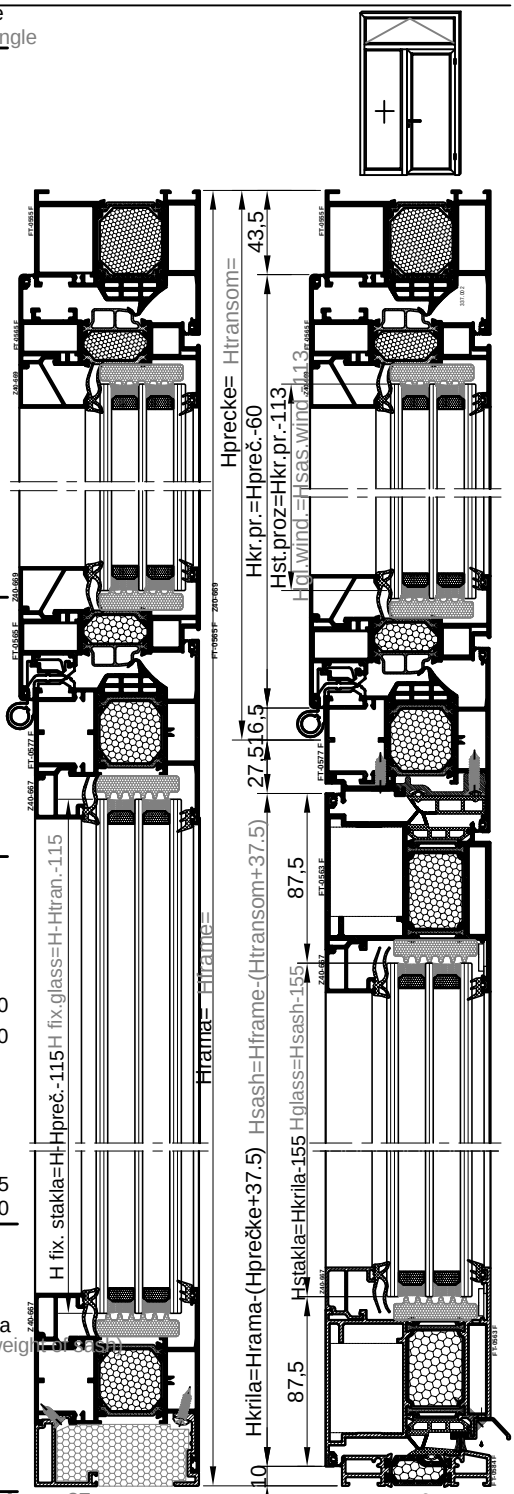


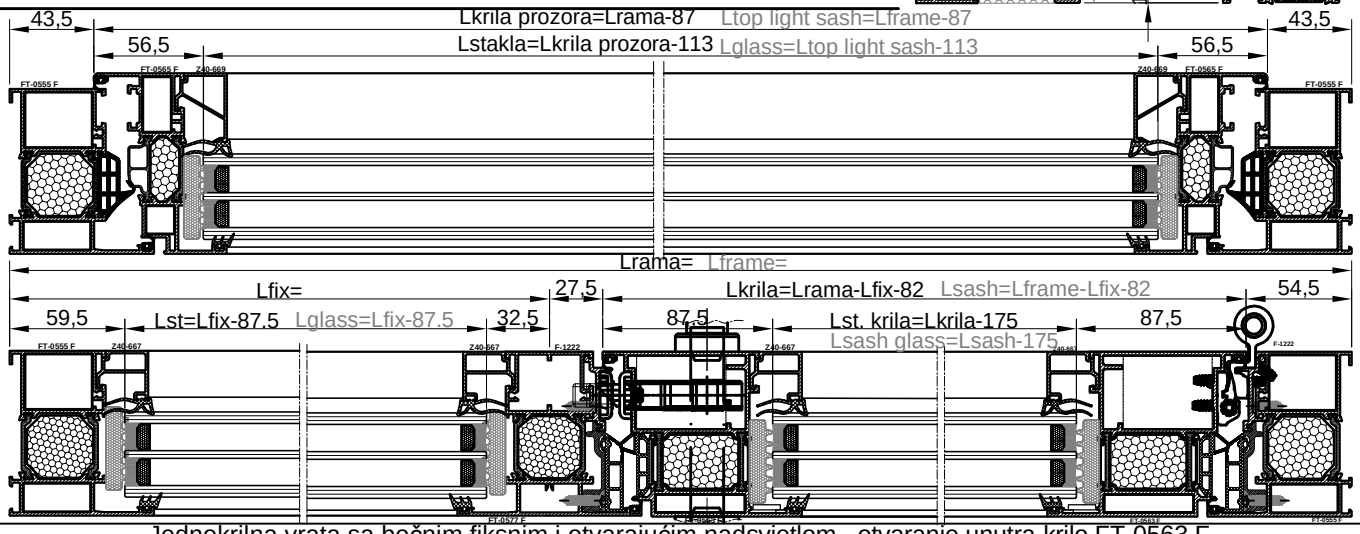
naziv name		mjera dimension	kom. pcs.	pilanje sawing angle
Ram FT-0555F	Frame FT-0555F	L	1	45-45
Ram FT-0555F	Frame FT-0555F	H	2	45-90
Krilo FT-0561F	Sash FT-0561F	L-Lfix-82	1	45-45
Krilo FT-0561F	Sash FT-0561F	H-(Hpr.kr+37.5)	2	45-90
Prag FT-0584F	Threshold FT-0584F	L-Lfix-153	1	90-90
Krilo pr.FT-0565F	Top light sash FT-0565F	L-87	2	45-45
Krilo pr.FT-0565F	Top light sash FT-0565F	Lpreč.-60	2	45-45
Staklo lajsna Z40-667	Glazing bead Z40-667	Lfix-72	2	90-90
Staklo lajsna Z40-667	Glazing bead Z40-667	Lkr-141	2	90-90
Staklo lajsna Z40-667	Glazing bead Z40-667	H-Hpreč.-143.5	2	90-90
Staklo lajsna Z40-667	Glazing bead Z40-667	Hkr.-185	2	90-90
Staklo lajsna Z40-669	Glazing bead Z40-669	Lkr.proz.-93	2	90-90
Staklo lajsna Z40-669	Glazing bead Z40-669	Hkr.proz.-137	2	90-90
Prečka FT-0575F	Transom FT-0575F	L-88	1	90-90
Prečka FT-0575F	Transom FT-0575F	H-Hpreč.-17.5	1	90-90
Prečka na prap. FT-0575F	Tran.-bottom frame prof. FT-0575F	Lfix.-60.5	1	90-90
Umetak rama F-1222	Additional profile F-1222	L-89	1	45-45
Umetak rama F-1222	Additional profile F-1222	H-(Hpr+17.7)	2	45-90
Umetak FB-41	Additional profile FB-41	Lfix-72	1	90-90
Umetak F-1486	Additional profile F-1486	Lfix-122	1	90-90
Okapnica F-1200	Drip cap profile F-1200	Lkr-54	1	90-90
Kutna spojnica 710.172	Corner bracket 710.172		2	
Kutna spojnica 710.141	Corner bracket 710.141		4	
Kutna spojnica 710.136	Corner bracket 710.136		4	
Kutna spojnica 731.010	Corner bracket 731.010		4	
Kutna spojnica 710.072	Corner bracket 710.072		2	
Veznik prečke 710.066	T bracket 710.066		10	
Veznik prečke 710.079	T bracket 710.079		10	
Kutna spojnica 730.001	Corner bracket 730.001		14	
Kutna spojnica 710.485	Corner bracket 710.485		4	
Kutna spojnica 710.458	Corner bracket 710.458		4	
Centralna brtva rama 334.005	Central gasket-frame 337.002	1Lkr+2Hkr		
Centralna brtva krila 334.006	Central gasket-sash 334.006	2Lkr+2Hkr		
Brtva 321.006	Rebate gasket 321.006	3Lkr+4L+4Hkr+2Hpreč		
Brtva prema staklu vanj. 321.003	Glazing gasket -ext.- 321.003	2Lfix+2H+2Lkr+2Hkr+2L		
Brtva prema staklu unut. 311.004	Glazing gasket -internal- 311.004	2Lfix+2H+2Lkr+2Hkr+2L		
Brtva praga 331.013	Threshold gasket 331.013	L-Lfix-153	1	90-90
Četkica 7x9 347.003	Brush seal 7x9 347.003	Lkr-35	1	90-90
Izolacijski umetak 340.013	Underglass insulator 340.013	2(Lkr-131)+2(Hkr-155)		
Izolacijski umetak 340.013	Underglass insulator 340.013	2(L-91.5)+2(Hpr.-89)		
Čep okapnice F-1200 373.027	End cap for F-1200 373.027		1 par	
Cent.brtva prozora 337.002	Cent.gasket-window 337.002	2Lkr+2Hkr		
Umetak na pragu 373.019	End cap for threshold 373.019		1 par	
Umetak na ramu 374.043	Additional pvc profile 374.043	L-Lfix-61	1	45-45
Umetak na ramu 374.043	Additional pvc profile 374.043	H-Hpreč.-17	2	45-90
Brava G-U Secury s MR2 (35) tri ključanja 122.016	Multipoint lock - G-U Secury MR2 (35) -122.016		1	
Prihvatna pločica 24x6x2 122.028	Striking plate 24x6x2 122.028		2	
Prihvatni lim 24x6 (Lijevi) 122.081	Striking plate 24x6 (Left) 122.081		1	
Trodijelna cilindrična šarka 112.011.01 - bijela	Barrel door hinge-3 part 112.011.01 - white	2 ili (3) po krilu ovisno o visini i tež.krila 2 or (3) per sash(dep. of height and weight of sash)		
Ručka za vrata 102.028	Door handle 102.028		2	
Cilindar (75+35) 122.095	Cylinder (75+35) 122.095		1	
Štitnik cilindra 122.098	Cylinder rosette 124.098		2	
Četvrtka 102.025	Square spindle 102.025		1	
Protuprovalni umetak 141.002	Security pin 141.002		2	



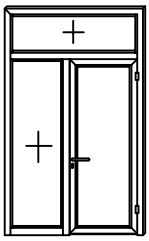


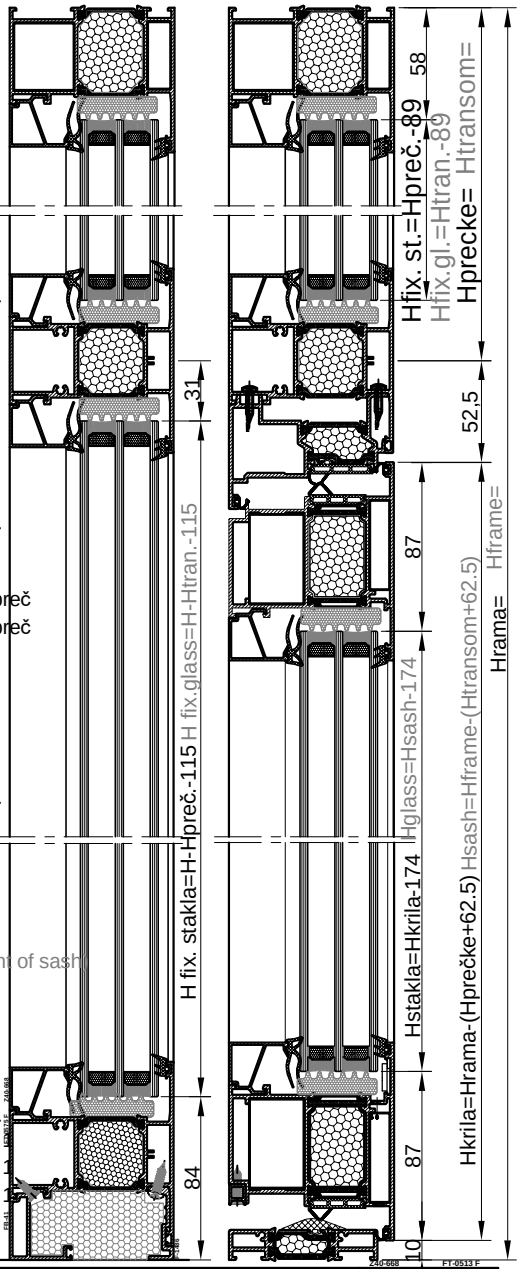
naziv name		mjera dimension	kom. pcs.	pilanje sawing angle
Ram FT-0555F	Frame FT-0555F	L	1	45-45
Ram FT-0555F	Frame FT-0555F	H	2	45-90
Krilo FT-0563F	Sash FT-0563F	L-Lfix-82	1	45-45
Krilo FT-0563F	Sash FT-0563F	H-(Hpr.kr+37.5)	2	45-90
Prag FT-0584F	Threshold FT-0584F	L-Lfix-153	1	90-90
Krilo pr.FT-0565F	Top light sash FT-0565F	L-87	2	45-45
Krilo pr.FT-0565F	Top light sash FT-0565F	Lpreč.-60	2	45-45
Staklo lajsna Z40-667	Glazing bead Z40-667	Lfix-72	2	90-90
Staklo lajsna Z40-667	Glazing bead Z40-667	Lkr-141	2	90-90
Staklo lajsna Z40-667	Glazing bead Z40-667	H-Hpreč.-143.5	2	90-90
Staklo lajsna Z40-667	Glazing bead Z40-667	Hkr.-185	2	90-90
Staklo lajsna Z40-669	Glazing bead Z40-669	Lkr.proz.-93	2	90-90
Staklo lajsna Z40-669	Glazing bead Z40-669	Hkr.proz.-137	2	90-90
Prečka FT-0575F	Transom FT-0575F	L-88	1	90-90
Prečka FT-0575F	Transom FT-0575F	H-Hpreč.-17.5	1	90-90
Prečka na prap. FT-0575F	Tran.-bottom frame prof. FT-0575F	Lfix.-60.5	1	90-90
Umetak rama F-1222	Additional profile F-1222	L-89.1	1	45-45
Umetak rama F-1222	Additional profile F-1222	H-(Hpr+17.7)	2	45-90
Umetak FB-41	Additional profile FB-41	Lfix-72	1	90-90
Umetak F-1486	Additional profile F-1486	Lfix-122	1	90-90
Okapnica F-1200	Drip cap profile F-1200	Lkr-54	1	90-90
Kutna spojnica 710.172	Corner bracket 710.172		2	
Kutna spojnica 710.141	Corner bracket 710.141		4	
Kutna spojnica 710.136	Corner bracket 710.136		4	
Kutna spojnica 731.010	Corner bracket 731.010		4	
Kutna spojnica 710.072	Corner bracket 710.072		2	
Veznik prečke 710.066	T bracket 710.066		10	
Veznik prečke 710.079	T bracket 710.079		10	
Kutna spojnica 730.001	Corner bracket 730.001		14	
Kutna spojnica 710.485	Corner bracket 710.485		4	
Kutna spojnica 710.458	Corner bracket 710.458		4	
Centralna brtva rama 334.005	Central gasket-frame 334.005	1Lkr+2Hkr		
Centralna brtva krila 334.006	Central gasket-sash 334.006	2Lkr+2Hkr		
Brtva 321.006	Rebate gasket 321.006	3Lkr+4L+4Hkr+2Hpreč		
Brtva prema staklu vanj. 321.003	Glazing gasket -ext.- 321.003	2Lfix+2H+2Lkr+2Hkr+2L		
Brtva prema staklu unut. 311.004	Glazing gasket -internal- 311.004	2Lfix+2H+2Lkr+2Hkr+2L		
Brtva praga 331.013	Threshold gasket 331.013	L-Lfix-153	1	90-90
Četkica 7x9 347.003	Brush seal 7x9 347.003	Lkr-35	1	90-90
Izolacijski umetak 340.013	Underglass insulator 340.013	2(Lkr-151)+2(Hkr-175)		
Izolacijski umetak 340.013	Underglass insulator 340.013	2(L-91.5)+2(Hpr.-89)		
Čep okapnice F-1200 373.027	End cap for F-1200 373.027		1 par	
Cent.brtva prozora 337.002	Cent.gasket-window 337.002	2Lkr+2Hkr		
Umetak na pragu 373.019	End cap for threshold 373.019		1 par	
Umetak na ramu 374.043	Additional pvc profile 374.043	L-Lfix-61	1	45-45
Umetak na ramu 374.043	Additional pvc profile 374.043	H-Hpreč.-17	2	45-90
Brava G-U Secury s MR2 (45) tri ključanja 122.015	Multipoint lock - G-U Secury MR2 (45) -122.015		1	
Prihvatna pločica 24x6x2 122.028	Striking plate 24x6x2 122.028		2	
Prihvatni lim 24x6 (Lijevi) 122.081	Striking plate 24x6 (Left) 122.081		1	
Trodijelna cilindrična šarka 112.011.01 - bijela	Barrel door hinge-3 part 112.011.01 - white	2 ili (3) po krilu ovisno o visini i tež.krila 2 or (3) per sash(dep. of height and weight of sash)		
Ručka za vrata 102.028	Door handle 102.028		2	
Cilindar (75+35) 122.095	Cylinder (75+35) 122.095		1	
Štitnik cilindra 122.098	Cylinder rosette 122.098		2	
Četvrtka 102.025	Square spindle 102.025		1	
Protuprovalni umetak 141.002	Security pin 141.002		2	

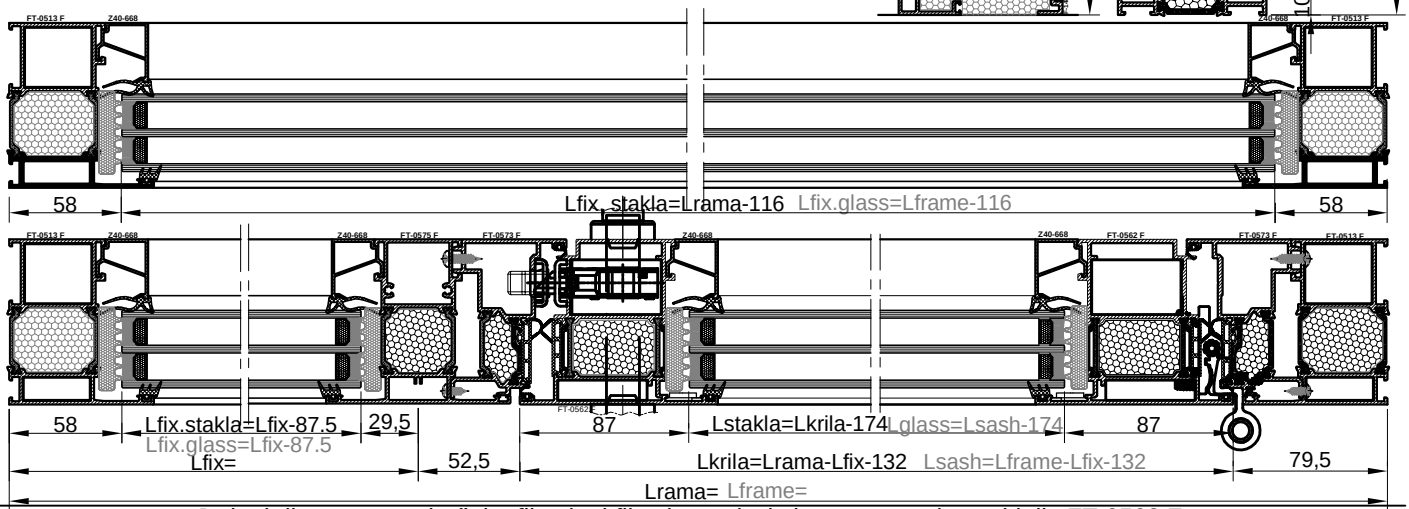




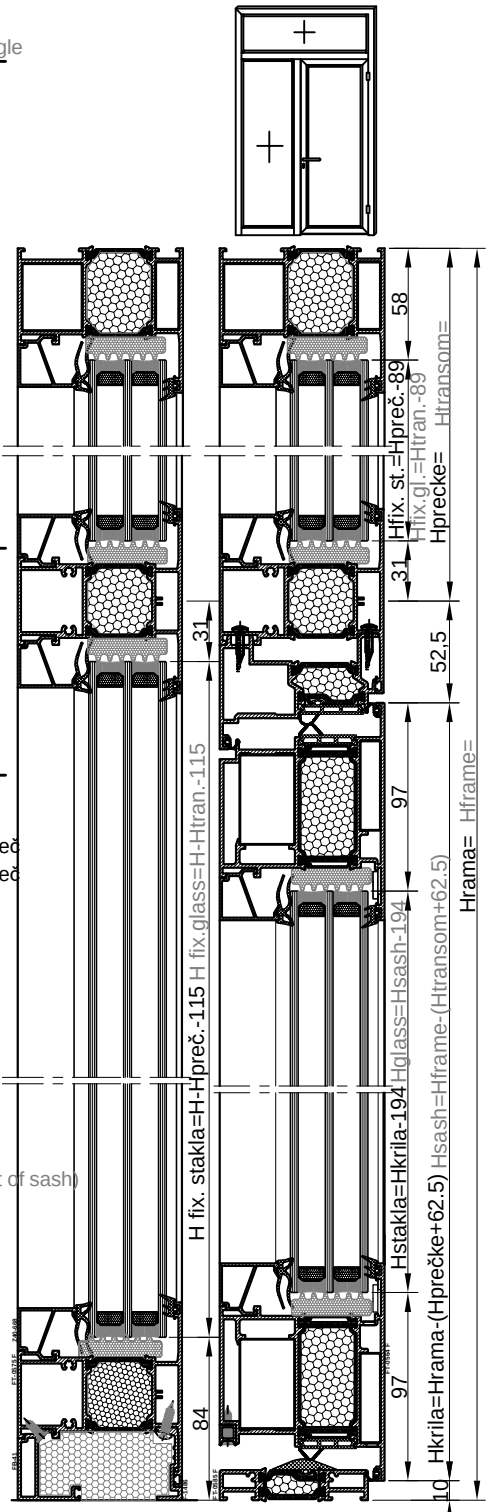
naziv name		mjera dimension	kom. pcs.	pilanje sawing angle
Ram FT-0513F	Frame FT-0513F	L	1	45-45
Ram FT-0513F	Frame FT-0513F	H	2	45-90
Krilo FT-0562F	Sash FT-0562F	L-Lfix-132	2	45-45
Krilo FT-0562F	Sash FT-0562F	H-(Hpr.+62.5)	2	45-45
Prečka FT-0575F	Transom FT-0575F	L-87.5	1	90-90
Prečka FT-0575F	Transom FT-0575F	H-Hpreč.-17	1	90-90
Parap. prečka FT-0575F	Tran.-bottom frame prof.FT-0575F	Lfix.-60.5	1	90-90
Prag FT-0585F	Threshold FT-0585F	L-Lfix-190	1	90-90
Staklo lajsna Z40-668	Glazing bead Z40-668	Lkr-160	2	90-90
Staklo lajsna Z40-668	Glazing bead Z40-668	Lfix-72	2	90-90
Staklo lajsna Z40-668	Glazing bead Z40-668	L-99	2	90-90
Staklo lajsna Z40-668	Glazing bead Z40-668	Hkr-204	2	90-90
Staklo lajsna Z40-668	Glazing bead Z40-668	H-Hpreč.-143.5	2	90-90
Staklo lajsna Z40-668	Glazing bead Z40-668	Hpreč.-116	2	90-90
Umetak FT-0573F	Additional profile FT-0573F	L-Lfix-60.5	1	45-45
Umetak FT-0573F	Additional profile FT-0573F	H-(Hpr+17)	2	45-90
Umetak FB-41	Additional profile FB-41	Lfix-72	1	90-90
Umetak F-1486	Additional profile F-1486	Lfix-122	1	90-90
Kutna spojnica 710.145	Corner bracket 710.145		2	
Kutna spojnica 710.133	Corner bracket 710.133		4	
Kutna spojnica 710.091	Corner bracket 710.091		2	
Kutna spojnica 710.134	Corner bracket 710.134		4	
Kutna spojnica 731.010	Corner bracket 731.010		4	
Kutna spojnica 730.001	Corner bracket 730.001		6	
Veznik prečke 710.066	T bracket 710.066		10	
Veznik prečke 710.079	T bracket 710.079		10	
Cent. brtva rama 334.009	Central gasket-frame 334.009	1Lkr+2Hkr		
Cent. brtva krila 334.010	Central gasket-sash 334.010	2Lkr+2Hkr		
Brtva prema st. vanj. 321.003	Glazing gasket -ext.- 321.003	2Lkr+2Hkr+2Lfix+2H+2L+2Hpreč		
Brtva prema st. unut. 311.004	Glazing gasket -int.- 311.004	2Lkr+2Hkr+2Lfix+2H+2L+2Hpreč		
Brtva 321.006	Rebate gasket 321.006	3Lkr+4Hkr		
Brtva praga 331.012	Threshold gasket 331.012	L-Lfix-190	1	
Izolacijski umetak 340.013	Underglass insulator 340.013	2(Lkr-150)+2(Hkr-174)		
Izolacijski umetak 340.013	Underglass insulator 340.013	2(Lfix-66)+2(H-141.5)		
Izolacijski umetak 340.013	Underglass insulator 340.013	2(Lfix-92)+2(Hpreč.-89)		
Umetak na pragu 373.020	End cap for threshold 373.020		1 par	
Brava G-U Secury s MR2 (35) tri ključanja 122.016	Multipoint lock - G-U Secury MR2 (35) -122.016		1	
Prihvatna pločica 24x6x2 122.028	Striking plate 24x6x2 122.028		2	
Prihvatni lim 24x6 (Desni)122.029	Striking plate 24x6 (Right) 122.029		1	
Trodijelna cilindrična šarka 112.012.01 - bijela	Barrel door hinge-3 part 112.012.01 - white	2 ili (3) po krilu ovisno o visini i tež.krila 2 or (3) per sash(dep. of height and weight of sash)		
Ručka za vrata 102.028	Door handle 102.028		2	
Cilindar (75+35) 122.095	Cylinder (75+35) 122.095		1	
Štitnik cilindra 122.098	Cylinder rosette 122.098		2	
Protuprovalni umetak 141.002	Security pin 141.002		2	
Četvrtka 102.025	Square spindle 102.025		1	
Staklo 40 mm	Glass 40 mm	(Lfix-87.5)x(H-Hpreč.-115)		
Staklo 40 mm	Glass 40 mm	(Lkr.-174)x(Hkr-174)		
Staklo 40 mm	Glass 40 mm	(L-116)x(Hpre.-89)		

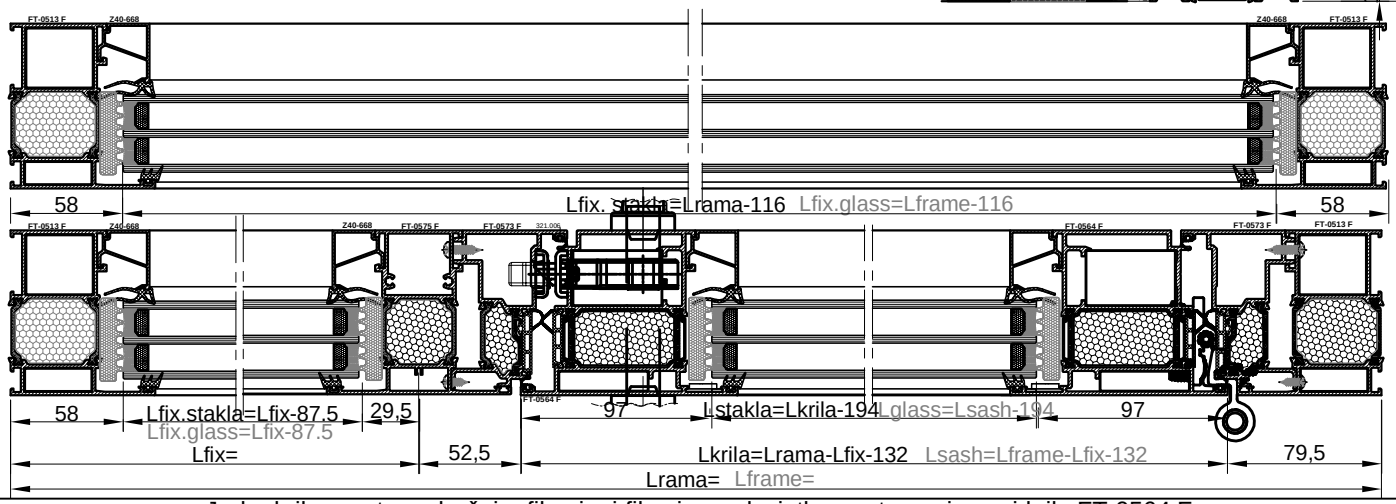




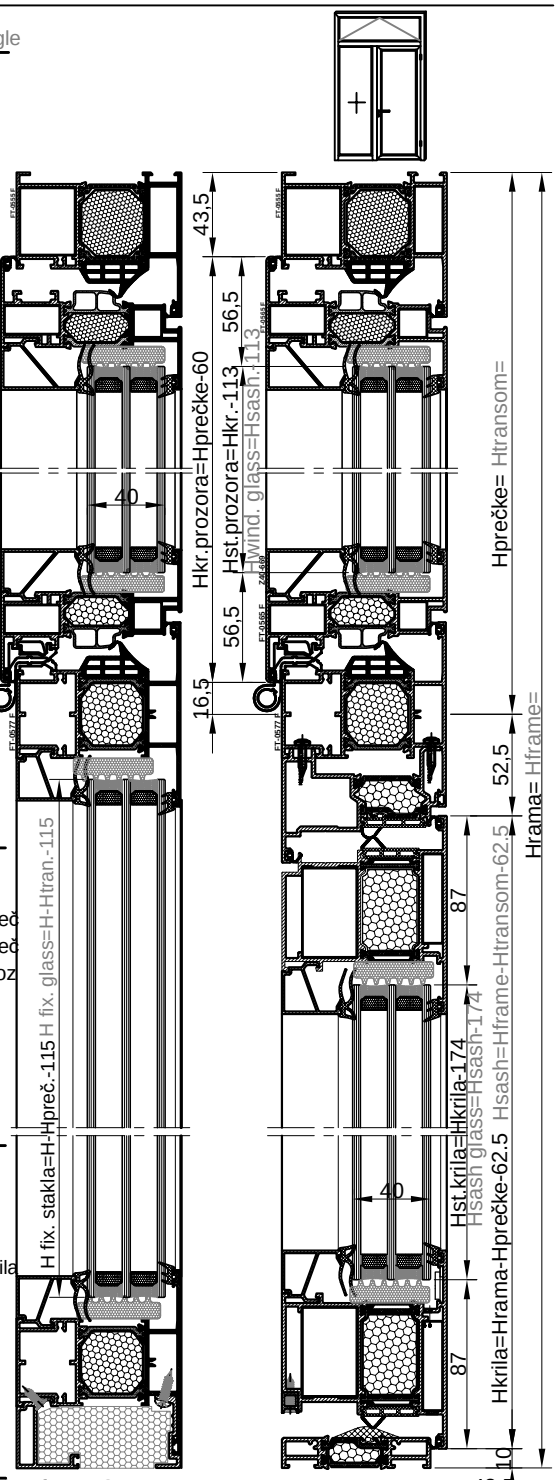


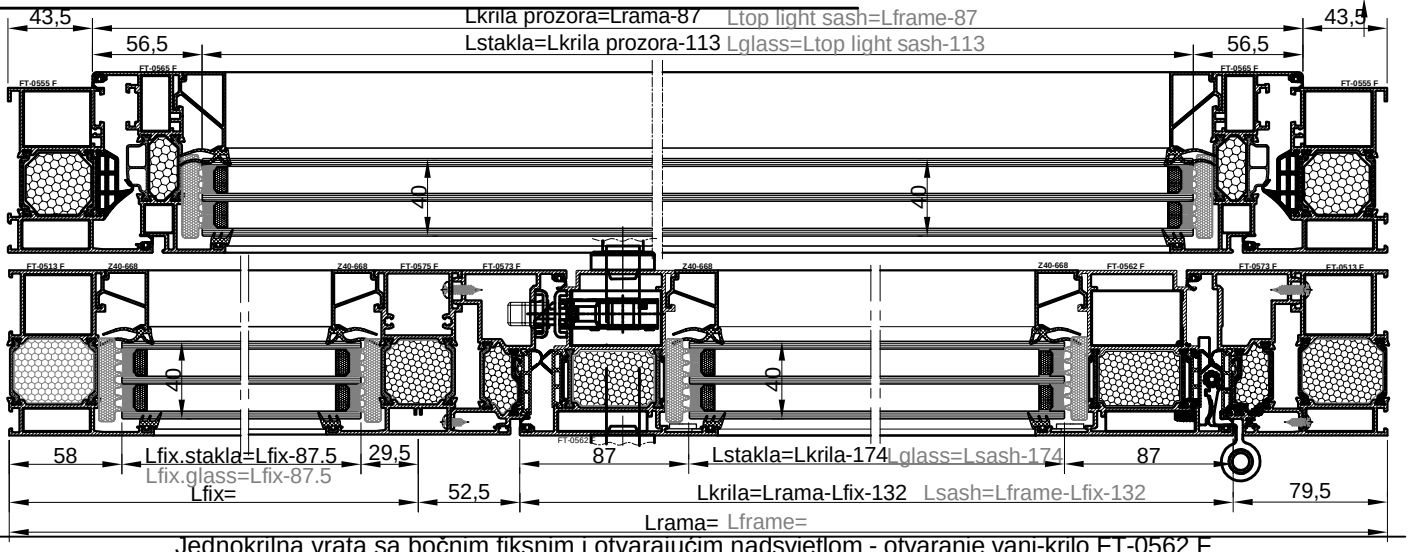
naziv name		mjera dimension	kom. pcs.	pilanje sawing angle
Ram FT-0513F	Frame FT-0513F	L	1	45-45
Ram FT-0513F	Frame FT-0513F	H	2	45-90
Krilo FT-0564F	Sash FT-0564F	L-Lfix-132	2	45-45
Krilo FT-0564F	Sash FT-0564F	H-(Hpr.+62.5)	2	45-45
Prečka FT-0575F	Transom FT-0575F	L-87.5	1	90-90
Prečka FT-0575F	Transom FT-0575F	H-Hpreč.-17	1	90-90
Parap. prečka FT-0575F	Tran.-bottom frame prof.FT-0575F	Lfix.-60.5	1	90-90
Prag FT-0585F	Threshold FT-0585F	L-Lfix-190	1	90-90
Staklo lajsna Z40-668	Glazing bead Z40-668	Lkr-180	2	90-90
Staklo lajsna Z40-668	Glazing bead Z40-668	Lfix-72	2	90-90
Staklo lajsna Z40-668	Glazing bead Z40-668	L-99	2	90-90
Staklo lajsna Z40-668	Glazing bead Z40-668	Hkr-224	2	90-90
Staklo lajsna Z40-668	Glazing bead Z40-668	H-Hpreč.-143.5	2	90-90
Staklo lajsna Z40-668	Glazing bead Z40-668	Hpreč.-116	2	90-90
Umetak FT-0573F	Additional profile FT-0573F	L-Lfix-60.5	1	45-45
Umetak FT-0573F	Additional profile FT-0573F	H-(Hpr+17)	2	45-90
Umetak FB-41	Additional profile FB-41	Lfix-72	1	90-90
Umetak F-1486	Additional profile F-1486	Lfix-122	1	90-90
Kutna spojnica 710.145	Corner bracket 710.145		2	
Kutna spojnica 710.133	Corner bracket 710.133		4	
Kutna spojnica 710.091	Corner bracket 710.091		2	
Kutna spojnica 710.134	Corner bracket 710.134		4	
Kutna spojnica 731.010	Corner bracket 731.010		4	
Kutna spojnica 730.001	Corner bracket730.001		6	
Veznik prečke 710.066	T bracket 710.066		10	
Veznik prečke 710.079	T bracket 710.079		10	
Cent. brtva rama 334.009	Central gasket-frame 334.009	1Lkr+2Hkr		
Cent. brtva krila 334.010	Central gasket-sash 334.010	2Lkr+2Hkr		
Brtva prema st. vanj. 321.003	Glazing gasket -ext.- 321.003	2Lkr+2Hkr+2Lfix+2H+2L+2Hpreč		
Brtva prema st. unut. 311.004	Glazing gasket -int.- 311.004	2Lkr+2Hkr+2Lfix+2H+2L+2Hpreč		
Brtva 321.006	Rebate gasket 321.006	3Lkr+4Hkr		
Brtva praga 331.012	Threshold gasket 331.012	L-Lfix-190	1	
Izolacijski umetak 340.013	Underglass insulator 340.013	2(Lkr-170)+2(Hkr-194)		
Izolacijski umetak 340.013	Underglass insulator 340.013	2(Lfix-66)+2(H-141.5)		
Izolacijski umetak 340.013	Underglass insulator 340.013	2(Lfix-92)+2(Hpreč.-89)		
Umetak na pragu 373.020	End cap for threshold 373.020		1 par	
Brava G-U Secury s MR2 (45) tri ključanja 122.015	Multipoint lock - G-U Secury MR2 (45) -122.015		1	
Prihvatna pločica 24x6x2 122.028	Striking plate 24x6x2 122.028		2	
Prihvatni lim 24x6 (Desni) 122.029	Striking plate 24x6 (Right) 122.029		1	
Trodijelna cilindrična šarka 112.012.01 - bijela	Barrel door hinge-3 part 112.012.01 - white	2 ili (3) po krilu ovisno o visini i tež.krila 2 or (3) per sash(dep. of height and weight of sash)		
Ručka za vrata 102.028	Door handle 102.028		2	
Cilindar (75+35) 122.095	Cylinder (75+35) 122.095		1	
Štitnik cilindra 122.098	Cylinder rosette 122.098		2	
Četvrtka 102.025	Square spindle 102.025		1	
Protuprovalni umetak 141.002	Security pin 141.002		2	
Staklo 40 mm	Glass 40 mm	(Lfix-87.5)x(H-Hpreč.-115)	1	
Staklo 40 mm	Glass 40 mm	(Lkr.-174)x(Hkr-174)	1	
Staklo 40 mm	Glass 40 mm	(L-116)x(Hpre.-89)	1	



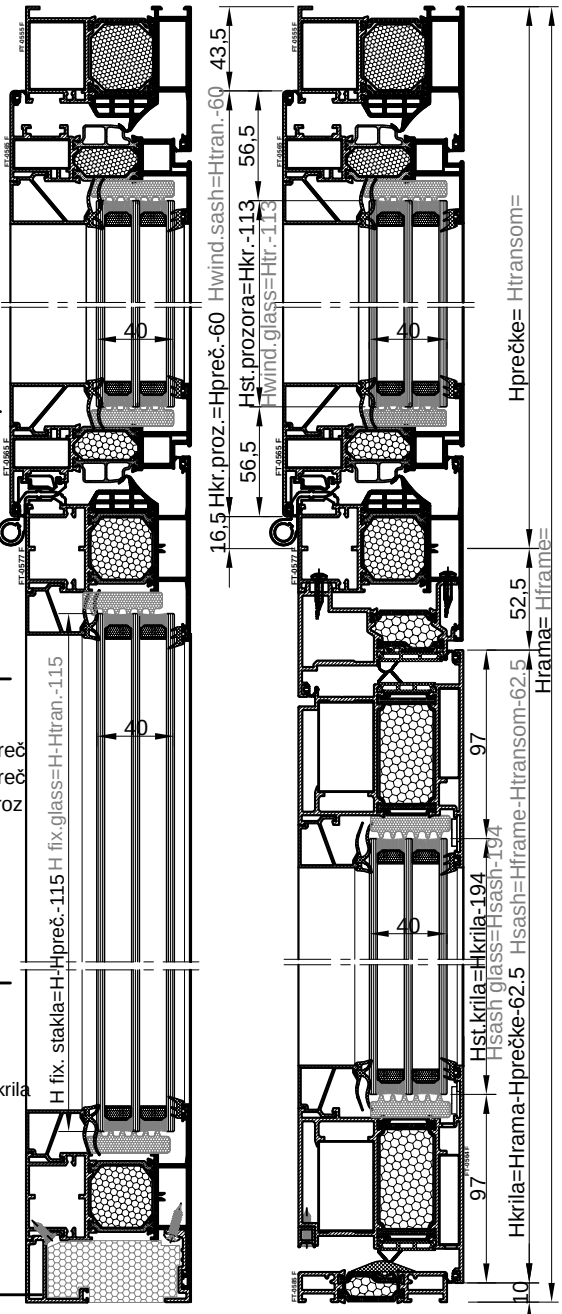


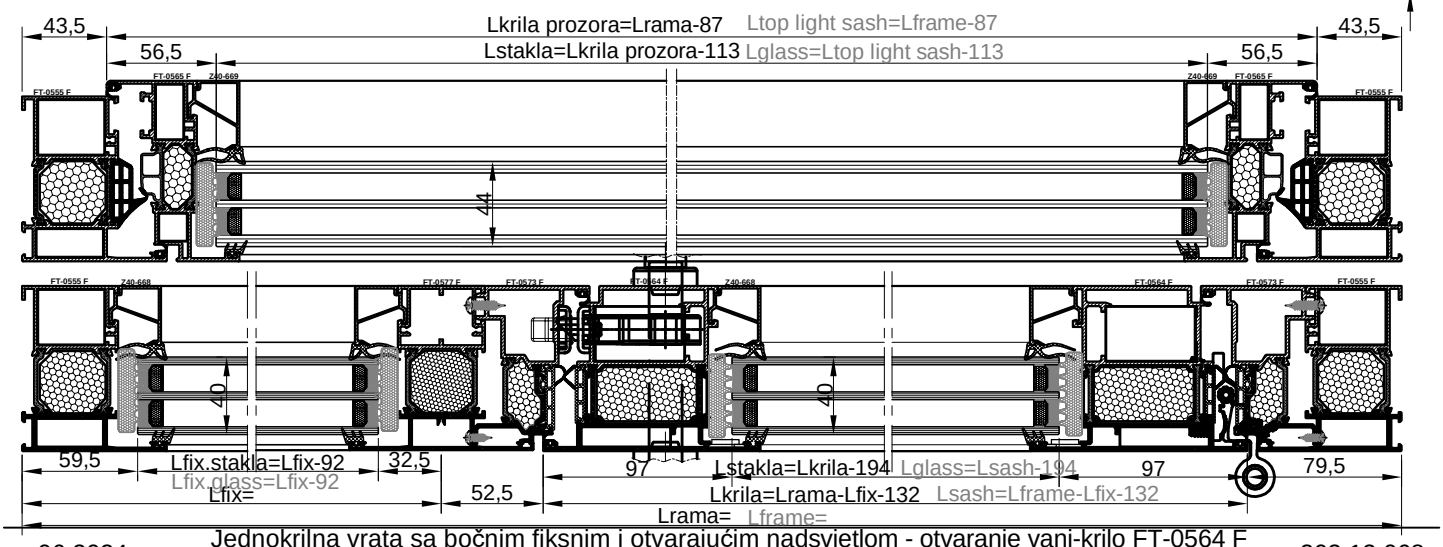
naziv / name		mjera / dimension	kom. / pcs.	pilanje / sawing angle
Ram FT-0555F	Frame FT-0555F	L	1	45-45
Ram FT-0555F	Frame FT-0555F	H	2	45-90
Krilo FT-0562F	Sash FT-0562F	L-Lfix-132	2	45-45
Krilo FT-0562F	Sash FT-0562F	H-(Hpr.+62.5)	2	45-45
Prečka FT-0575F	Transom FT-0575F	L-87.5	1	90-90
Prečka FT-0575F	Transom FT-0575F	H-Hpreč.-17	1	90-90
Parap. prečka FT-0575F	Tran.-bottom fr.prof.FT-0575F	Lfix.-60.5	1	90-90
Prag FT-0585F	Threshold FT-0585F	L-Lfix-190	1	90-90
Krilo pr.FT-0565F	Top light sash FT-0565F	L-87	2	45-45
Krilo pr.FT-0565F	Top light sash FT-0565F	Lpreč.-60	2	45-45
Staklo lajsna Z40-668	Glazing bead Z40-668	Lkr-160	2	90-90
Staklo lajsna Z40-668	Glazing bead Z40-668	Lfix-72	2	90-90
Staklo lajsna Z40-668	Glazing bead Z40-668	Hkr-204	2	90-90
Staklo lajsna Z40-668	Glazing bead Z40-668	H-Hpreč.-143.5	2	90-90
Staklo lajsna Z40-670	Glazing bead Z40-670	Lkr.pr.-93	2	90-90
Staklo lajsna Z40-670	Glazing bead Z40-670	Hkr.pr.-137	2	90-90
Umetak FT-0573F	Additional profile FT-0573F	L-Lfix-60.5	1	45-45
Umetak FT-0573F	Additional profile FT-0573F	H-(Hpr+17)	2	45-90
Umetak FB-41	Additional profile FB-41	Lfix-72	1	90-90
Umetak F-1486	Additional profile F-1486	Lfix-122	1	90-90
Kutna spojnica 710.172	Corner bracket 710.172		2	
Kutna spojnica 710.133	Corner bracket 710.133		4	
Kutna spojnica 710.072	Corner bracket 710.072		2	
Kutna spojnica 710.134	Corner bracket 710.134		4	
Kutna spojnica 731.010	Corner bracket 731.010		4	
Kutna spojnica 730.001	Corner bracket 730.001		10	
Kutna spojnica 710.485	Corner bracket 710.485		4	
Kutna spojnica 710.458	Corner bracket 710.458		4	
Veznik prečke 710.066	T bracket 710.066		10	
Veznik prečke 710.079	T bracket 710.079		10	
Cent. brtva rama 334.009	Central gasket-frame 334.009	1Lkr+2Hkr		
Cent. brtva krila 334.010	Central gasket-sash 334.010	2Lkr+2Hkr		
Brtva prema st. vanj. 321.003	Glazing gasket -ext.- 321.003	2Lkr+2Hkr+2Lfix+2H+2L+2Hpreč		
Brtva prema st. unut. 311.004	Glazing gasket -int.- 311.004	2Lkr+2Hkr+2Lfix+2H+2L+2Hpreč		
Brtva 321.006	Rebate gasket 321.006	3Lkr+4Hkr+3Lkr.proz.+3Hkr.proz		
Brtva praga 331.012	Threshold gasket 331.012	L-Lfix-190	1	
Cent.brtva prozora 337.002	Cent.gasket-window 337.002	2Lkr+2Hkr		
Izolacijski umetak 340.013	Underglass insulator 340.013	2(Lkr-150)+2(Hkr-174)		
Izolacijski umetak 340.013	Underglass insulator 340.013	2(Lfix-66)+2(H-141.5)		
Izolacijski umetak 340.013	Underglass insulator 340.013	2(Lfix-92)+2(Hpreč.-89)		
Umetak na pragu 373.020	End cap for threshold 373.020		1 par	
Brava G-U Secury s MR2 (35) tri ključanja 122.016	Multipoint lock - G-U Secury MR2 (35) -122.016		1	
Prihvatna pločica 24x6x2 122.028	Striking plate 24x6x2 122.028		2	
Prihvatni lim 24x6 (Desni)122.029	Striking plate 24x6 (Right) 122.029		1	
Trodijelna cilindrična šarka 112.012.01 - bijela	Barrel door hinge-3 part 112.012.01 - white	2 ili (3) po krilu ovisno o visini i tež.krila / 2 or (3) per sash(dep. of height and weight of sash)		
Ručka za vrata 102.028	Door handle 102.028		2	
Cilindar (75+35) 122.095	Cylinder (75+35) 122.095		1	
Štitnik cilindra 122.098	Cylinder rosette 122.098		2	
Protuprovalni umetak 141.002	Security pin 141.002		2	
Četvrtka 102.025	Square spindle 102.025		1	

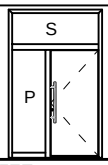




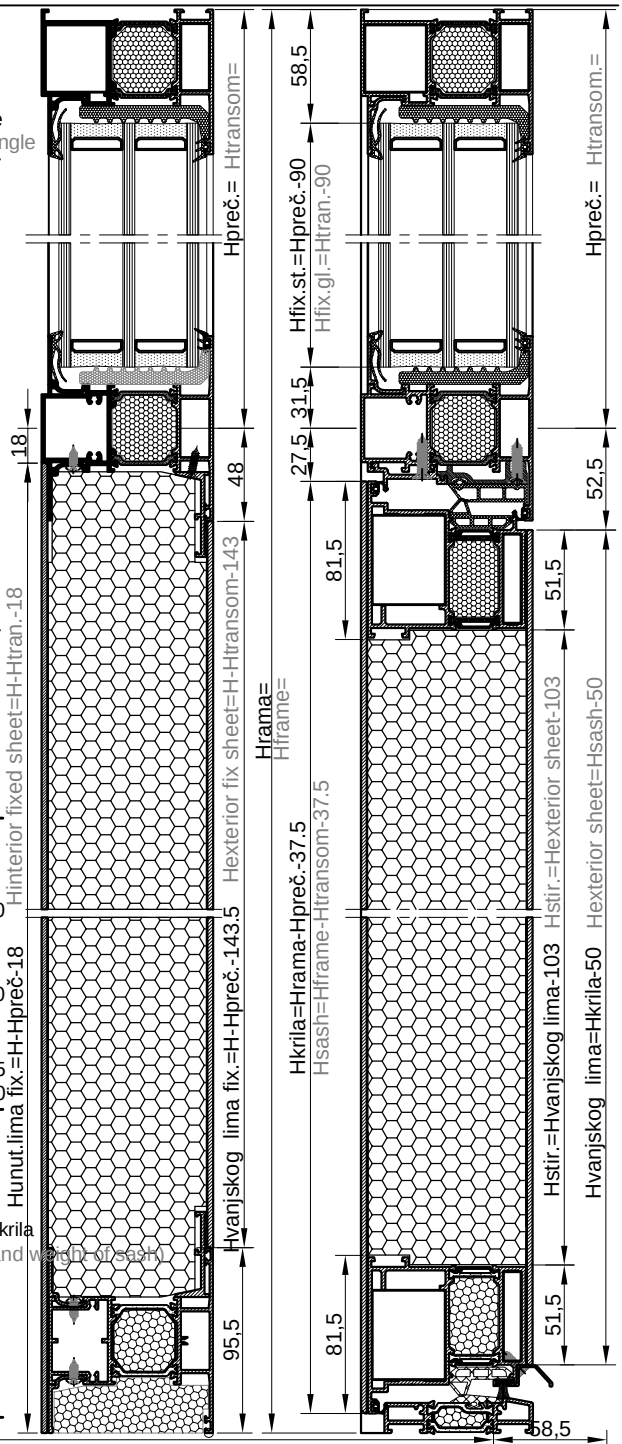
naziv name		mjera dimension	kom. pcs.	pilanje sawing angle
Ram FT-0555F	Frame FT-0555F	L	1	45-45
Ram FT-0555F	Frame FT-0555F	H	2	45-90
Krilo FT-0564F	Sash FT-0562F	L-Lfix-132	2	45-45
Krilo FT-0564F	Sash FT-0562F	H-(Hpr.+62.5)	2	45-45
Prečka FT-0575F	Transom FT-0575F	L-87.5	1	90-90
Prečka FT-0575F	Transom FT-0575F	H-Hpreč.-17	1	90-90
Parap. prečka FT-0575F	Tran.-bott.frame prof.FT-0575F	Lfix.-60.5	1	90-90
Prag FT-0585F	Threshold FT-0585F	L-Lfix-190	1	90-90
Krilo pr.FT-0565F	Top light sash FT-0565F	L-87	2	45-45
Krilo pr.FT-0565F	Top light sash FT-0565F	Lpreč.-60	2	45-45
Staklo lajsna Z40-668	Glazing bead Z40-668	Lkr-180	2	90-90
Staklo lajsna Z40-668	Glazing bead Z40-668	Lfix-72	2	90-90
Staklo lajsna Z40-668	Glazing bead Z40-668	Hkr-224	2	90-90
Staklo lajsna Z40-668	Glazing bead Z40-668	H-Hpreč.-143.5	2	90-90
Staklo lajsna Z40-670	Glazing bead Z40-670	Lkr.pr.-93	2	90-90
Staklo lajsna Z40-670	Glazing bead Z40-670	Hkr.pr.-137	2	90-90
Umetak FT-0573F	Additional profile FT-0573F	L-Lfix-60.5	1	45-45
Umetak FT-0573F	Additional profile FT-0573F	H-(Hpr+17)	2	45-90
Umetak FB-41	Additional profile FB-41	Lfix-72	1	90-90
Umetak F-1486	Additional profile F-1486	Lfix-122	1	90-90
Kutna spojnica 710.172	Corner bracket 710.172		2	
Kutna spojnica 710.133	Corner bracket 710.133		4	
Kutna spojnica 710.072	Corner bracket 710.072		2	
Kutna spojnica 710.134	Corner bracket 710.134		4	
Kutna spojnica 731.010	Corner bracket 731.010		4	
Kutna spojnica 730.001	Corner bracket 730.001		10	
Kutna spojnica 710.485	Corner bracket 710.485		4	
Kutna spojnica 710.458	Corner bracket 710.458		4	
Veznik prečke 710.066	T bracket 710.066		10	
Veznik prečke 710.079	T bracket 710.079		10	
Cent. brtva rama 334.009	Cent. gasket-frame 334.009	1Lkr+2Hkr		
Cent. brtva krila 334.010	Cent. gasket-sash 334.010	2Lkr+2Hkr		
Brtva prema st. vanj. 321.003	Glazing gasket -ext.- 321.003	2Lkr+2Hkr+2Lfix+2H+2L+2Hpreč		
Brtva prema st. unut. 311.004	Glazing gasket -int.- 311.004	2Lkr+2Hkr+2Lfix+2H+2L+2Hpreč		
Brtva 321.006	Rebate gasket 321.006	3Lkr+4Hkr+3Lkr.proz.+3Hkr.proz		
Brtva praga 331.012	Threshold gasket 331.012	L-Lfix-190	1	
Cent.brtva prozora 337.002	Cent.gasket-window 337.002	2Lkr+2Hkr		
Izolacijski umetak 340.013	Underglass insulat. 340.013	2(Lkr-170)+2(Hkr-194)		
Izolacijski umetak 340.013	Underglass insulat. 340.013	2(Lfix-66)+2(H-141.5)		
Izolacijski umetak 340.013	Underglass insulat. 340.013	2(Lfix-92)+2(Hpreč.-89)		
Umetak na pragu 373.020	End cap for threshold 373.020		1 par	
Brava G-U Secury s MR2 (45) tri ključanja 122.015	Multipoint lock - G-U Secury MR2 (45) -122.015		1	
Prihvatna pločica 24x6x2 122.028	Striking plate 24x6x2 122.028		2	
Prihvatni lim 24x6 (Desni) 122.029	Striking plate 24x6 (Right) 122.029		1	
Trodijelna cilindrična šarka 112.012.01 - bijela	Barrel door hinge-3 part 112.012.01 - white	2 ili (3) po krilu ovisno o visini i tež.krila 2 or (3) per sash(dep. of height and weight of sash)		
Ručka za vrata 102.028	Door handle 102.028		2	
Cilindar (75+35) 122.095	Cylinder (75+35) 122.095		1	
Štitnik cilindra 122.098	Cylinder rosette 122.098		2	
Četvrtka 102.025	Square spindle 102.025		1	
Protuprovalni umetak 141.002	Security pin 141.002		2	

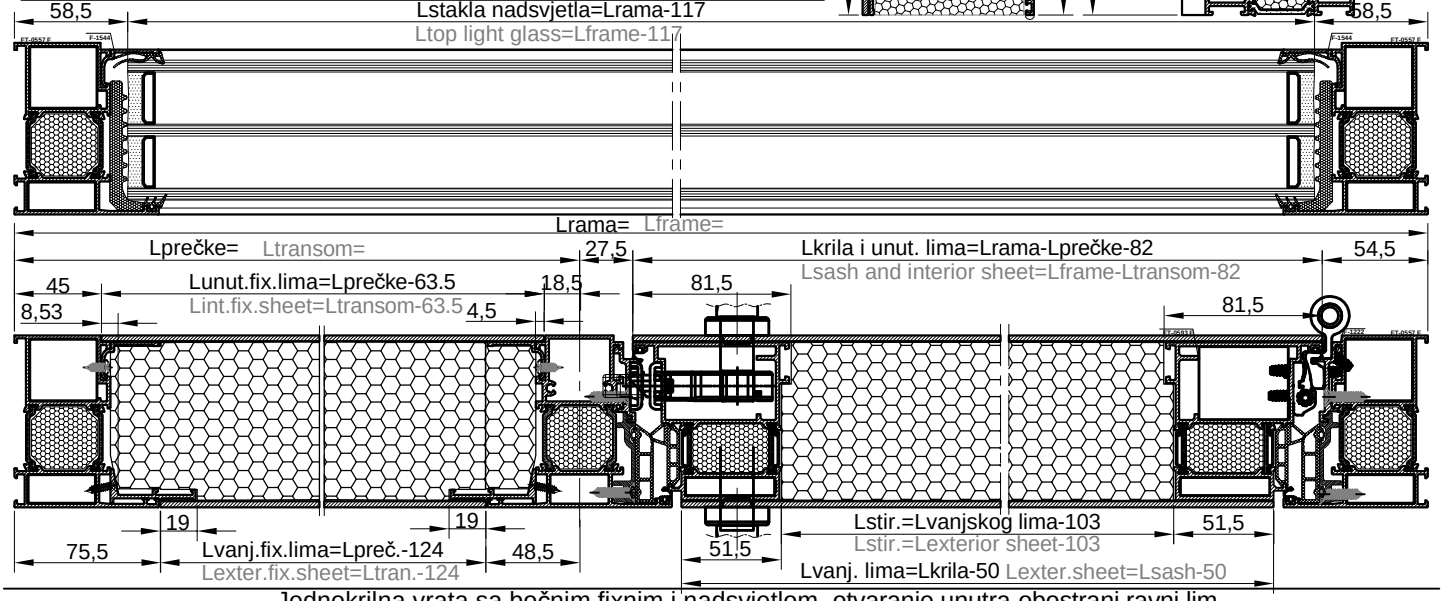




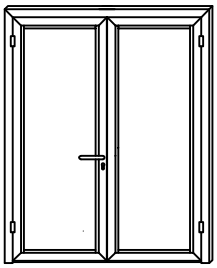


naziv name		mjera dimension	kom. pcs.	pilanje sawing angle
Ram FT-0557F	Frame FT-0557F	L	1	45-45
Ram FT-0557F	Frame FT-0557F	H	2	45-90
Krilo FT-0593F	Sash FT-0593F	L-Lpreč.-82	2	45-45
Krilo FT-0593F	Sash FT-0593F	H-Hpreč-37.5	2	45-45
Prag FT-0584F	Threshold FT-0584F	L-Lpreč.-153	1	90-90
Prečka FT-0580F	Transom FT-0580F	L-89	1	90-90
Prečka FT-0577F	Transom FT-0577F	Lpreč.-62	1	90-90
Prečka FT-0580F	Transom FT-0580F	H-Hpreč.-17.5	1	90-90
Okapnica F-1200	Drip cap profile F-1200	Lkr-54	1	90-90
Al profil F-1222	Al profile F-1222	L-Lpreč.-62	1	45-45
Al profil F-1222	Al profile F-1222	H-Hpreč.-17.5	2	45-90
Staklo lajsna F-1544	Glazing bead F-1544	L-99	2	90-90
Staklo lajsna F-1544	Glazing bead F-1544	Lpreč.-72	3	90-90
Staklo lajsna F-1544	Glazing bead F-1544	Hpreč.-122	2	90-90
Staklo lajsna F-1544	Glazing bead F-1544	H-Hpreč.-142.5	2	90-90
Al umetak F-1543	Additional profile F-1543	Lpreč.-72	2	90-90
Al umetak F-1543	Additional profile F-1543	H-Hpreč.-180.5	2	90-90
Kutna spojnica 710.126	Corner bracket 710.126		2	
Kutna spojnica 710.173	Corner bracket 710.173		2	
Kutna spojnica 710.136	Corner bracket 710.136		4	
Kutna spojnica 710.169	Corner bracket 710.169		4	
Kutna spojnica 730.001	Corner bracket 730.001		6	
Veznik 710.082	T bracket 710.082		5	
Veznik 710.083	T bracket 710.083		5	
Cent. brtva rama 334.005	Cent.gasket-frame 334.005	1Lkr+2Hkr		
Cent. brtva krila 334.006	Cent. gasket-sash 334.006	2Lkr+2Hkr		
Brtva 321.006	Rebate gasket 321.006	3Lkr+4Hkr		
Brtva praga 331.013	Threshold gasket 331.013	L-Lpreč.-153	1	90-90
Vanjska brtva fix. 321.002	Glazing gasket-ext.321.002	2L+2Hpreč.		
Unutarnja brtva fix. 311.003	Glazing gasket-int. 311.003	2L+2Hpreč.		
Četkica 7x9 347.003	Brush seal 7x9 347.003	Lkr-35	1	90-90
Čep okap. F-1200 373.027	End cap for F-1200 373.027		1 par	
Umetak na pragu 373.019	End cap for threshold 373.019		1 par	
Umetak na ramu 374.043	Umetak na ramu 374.043	L-Lpreč.-61	1	45-45
Umetak na ramu 374.043	Umetak na ramu 374.043	H-Hpreč.-17	2	45-90
Brava G-U Secury s MR2 (45) tri ključanja 122.015	Multipoint lock - G-U Secury MR2 (45) -122.015		1	
Prih. pločica 24x6x2 122.028	Striking plate 24x6x2 122.028		2	
Prih. lim 24x6 (Lijevi) 122.081	Striking plate 24x6 (Left) 122.081		1	
Trodijelna cilindr.šarka 112.011.01 - bijela	Barrel door hinge- 3 part -112.011.01-white	2 ili (3) po krilu ovisno o visini i tež.krila 2 or (3) per sash(dep. of height and weight of sash)		
Ručka 102.028	Door handle 102.028		2	
Cilindar (75+35) 122.095	Cylinder (75+35) 122.095		1	
Štitnik cilindra 122.098	Cylinder rosette 122.098		2	
Protuprovalni umetak 141.002	Security pin 141.002		2	
Četvrtka 102.025	Square spindle 102.025		1	

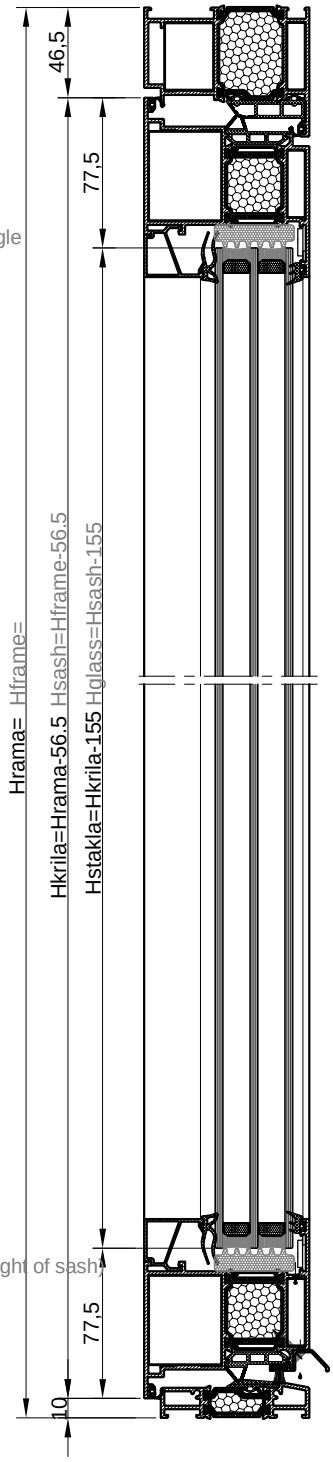


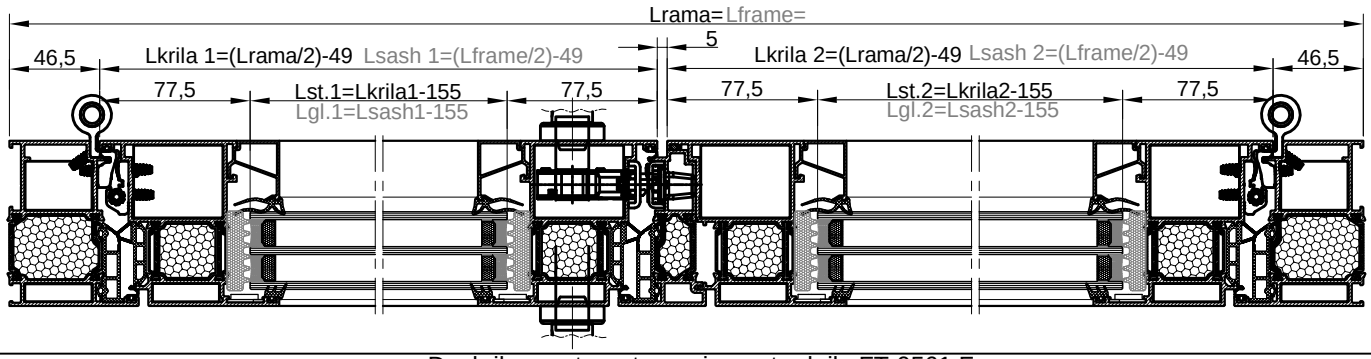


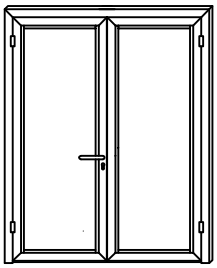
Dvokrilna vrata
Double-leaf door



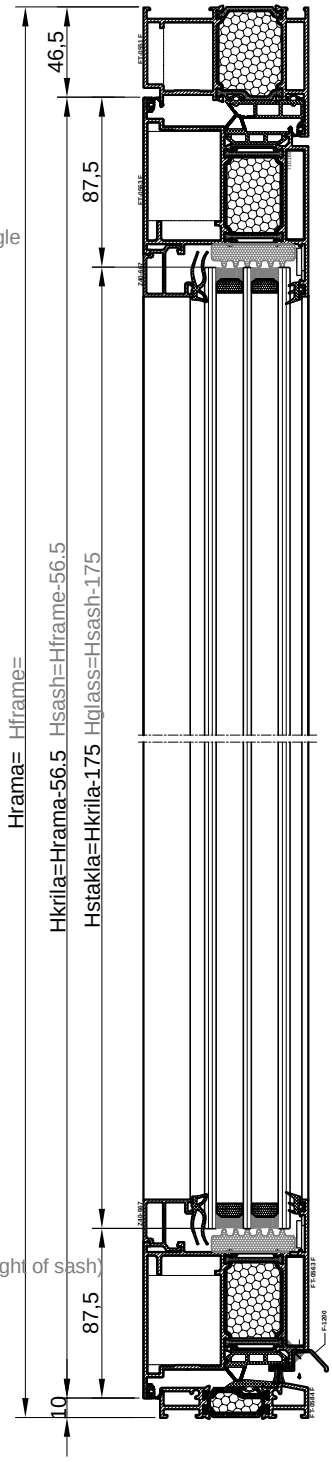
naziv name		mjera dimension	kom. pcs.	pilanje sawing angle
Ram FT-0551F	Frame FT-0551F	L	1	45-45
Ram FT-0551F	Frame FT-0551F	H	2	45-90
Krilo FT-0561F	Sash FT-0561F	(L/2)-49	4	45-45
Krilo FT-0561F	Sash FT-0561F	H-56.5	4	45-45
Prag FT-0584F	Threshold FT-0584F	L-164	1	90-90
Okapnica F-1200	Drip cap profile F-1200	Lkr-54	2	90-90
Staklo lajsna Z40-668	Glazing bead Z40-668	Lkr-141	4	90-90
Staklo lajsna Z40-668	Glazing bead Z40-668	Hkr-185	4	90-90
Profil kombatute FT-0571F	Flying mullion FT-0571F	Hkr-57	1	90-90
Kutna spojnica 710.143	Corner bracket 710.143		2	
Kutna spojnica 710.141	Corner bracket 710.141		10	
Kutna spojnica 710.136	Corner bracket 710.136		8	
Kutna spojnica 731.010	Corner bracket 731.010		8	
Kutna spojnica 730.001	Corner bracket 730.001		18	
Centralna brtva rama 334.005	Central gasket-frame 334.005	1L+3H		
Centralna brtva krila 334.006	Central gasket-sash 334.006	4Lkr+3Hkr		
Brtva na spoju rama i krila 321.006	Rebate gasket 321.006	1L+2H+4Lkr+5Hkr		
Brtva prema staklu vanjska 321.003	Glazing gasket -external- 321.003	4Lkr+4Hkr		
Brtva prema staklu unutarnja 311.004	Glazing gasket -internal- 311.004	4Lkr+4Hkr		
Brtva praga 331.013	Threshold gasket 331.013	L-164	1	90-90
Četkica 7x9 347.003	Brush seal 7x9 347.003	Lkr-35	1	90-90
Četkica 7x9 347.003	Brush seal 7x9 347.003	Lkr-2	1	90-90
Izolacijski umetak 340.013	Underglass insulator 340.013	4(Lkr.-131)+4(Hkr.-155)		
Čep okapnice F-1200 373.027	End cap for F-1200 373.027		2 para	
Umetak na pragu 373.019	End cap for threshold 373.019		1 par	
Čep kombatute 363.014	End cap for flying mullion 363.014		1 par	
Brava G-U Secury s MR2 (35) tri ključanja 122.016	Multipoint lock - G-U Secury MR2 (35) -122.016		1	
Brava G-U za pom. krilo (desna) 122.082	Lever-operated gear for passive leaf G-U (right) 122.082		1	
Gornji element za nastavljanje 122.026	Top shoot bolt unit 122.026		1	
Donji element za nastavljanje 122.027	Bottom shoot bolt unit 122.027		1	
Prihvatna pločica gore 122.028	Top striking plate 122.028		1	
Prihvatna pločica dolje 122.080	Bottom striking plate 122.080		1	
Trodijelna cilindrična šarka 112.011.01 - bijela	Barrel door hinge-3 part 112.011.01 - white	2 ili (3) po krilu ovisno o visini i tež.krila 2 or (3) per sash(dep. of height and weight of sash)		
Ručka za vrata 102.028	Door handle 102.028		2	
Četvrtka 102.025	Square spindle 102.025		1	
Cilindar (35-75) 122.095	Cylinder (35-75) 122.095		1	
Štitnik cilindra 122.098	Cylinder rosette 122.098		2	
Protuprovalni umetak 141.002	Security pin 141.002		4	
Staklo 40 mm	Glass 40 mm	(Lkr.-155)x(Hkr.-155)		2

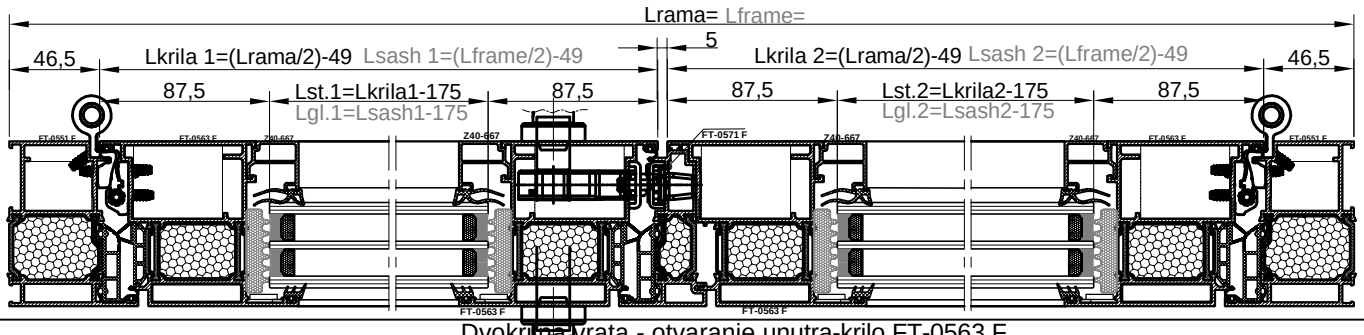




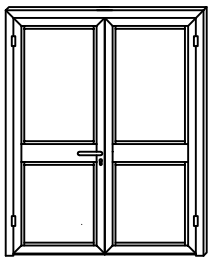


naziv name		mjera dimension	kom. pcs.	pilanje sawing angle
Ram FT-0551F	Frame FT-0551F	L	1	45-45
Ram FT-0551F	Frame FT-0551F	H	2	45-90
Krilo FT-0563F	Sash FT-0563F	(L/2)-49	4	45-45
Krilo FT-0563F	Sash FT-0563F	H-56.5	4	45-45
Prag FT-0584F	Threshold FT-0584F	L-164	1	90-90
Okapnica F-1200	Drip cap profile F-1200	Lkr-54	2	90-90
Staklo lajsna Z40-667	Glazing bead Z40-667	Lkr-161	4	90-90
Staklo lajsna Z40-667	Glazing bead Z40-667	Hkr-205	4	90-90
Profil kombatute FT-0571F	Flying mullion FT-0571F	Hkr-57	1	90-90
Kutna spojnica 710.143	Corner bracket 710.143		2	
Kutna spojnica 710.141	Corner bracket 710.141		2	
Kutna spojnica 710.136	Corner bracket 710.136		8	
Kutna spojnica 710.169	Corner bracket 710.169		8	
Kutna spojnica 731.010	Corner bracket 731.010		8	
Kutna spojnica 730.001	Corner bracket 730.001		18	
Centralna brtva rama 334.005	Central gasket-frame 334.005	1L+3H		
Centralna brtva krila 334.006	Central gasket-sash 334.006	4Lkr+3Hkr		
Brtva na spoju rama i krila 321.006	Rebate gasket 321.006	1L+2H+4Lkr+5Hkr		
Brtva prema staklu vanjska 321.003	Glazing gasket -external- 321.003	4Lkr+4Hkr		
Brtva prema staklu unutarnja 311.004	Glazing gasket -internal- 311.004	4Lkr+4Hkr		
Brtva praga 331.013	Threshold gasket 331.013	L-164	1	90-90
Četkica 7x9 347.003	Brush seal 7x9 347.003	Lkr-35	1	90-90
Četkica 7x9 347.003	Brush seal 7x9 347.003	Lkr-2	1	90-90
Izolacijski umetak 340.013	Underglass insulator 340.013	4(Lkr.-151)+4(Hkr.-175)		
Čep okapnice F-1200 373.027	End cap for F-1200 373.027		2 para	
Umetak na pragu 373.019	End cap for threshold 373.019		1 par	
Čep kombatute 363.014	End cap for flying mullion 363.014		1 par	
Brava G-U Secury s MR2 (45) tri ključanja 122.015	Multipoint lock - G-U Secury MR2 (45) -122.015		1	
Brava G-U za pom. krilo (desna) 122.082	Lever-operated gear for passive leaf G-U (right) 122.082		1	
Gornji element za nastavljanje 122.026	Top shoot bolt unit 122.026		1	
Donji element za nastavljanje 122.027	Bottom shoot bolt unit 122.027		1	
Prihvatna pločica gore 122.028	Top striking plate 122.028		1	
Prihvatna pločica dolje 122.080	Bottom striking plate 122.080		1	
Trodijelna cilindrična šarka 112.011.01 - bijela	Barrel door hinge-3 part 112.011.01- white	2 ili (3) po krilu ovisno o visini i tež.krila 2 or (3) per sash(dep. of height and weight of sash)		
Ručka za vrata 102.028	Door handle 102.028		2	
Četvrtka 102.025	Square spindle 102.025		1	
Cilindar (35-75) 122.095	Cylinder (35-75) 122.095		1	
Štitnik cilindra 122.098	Cylinder rosette 122.098		2	
Protuprovalni umetak 141.002	Security pin 141.002		4	
Staklo 44 mm	Glass 44 mm	(Lkr.-175)x(Hkr.-175)		2

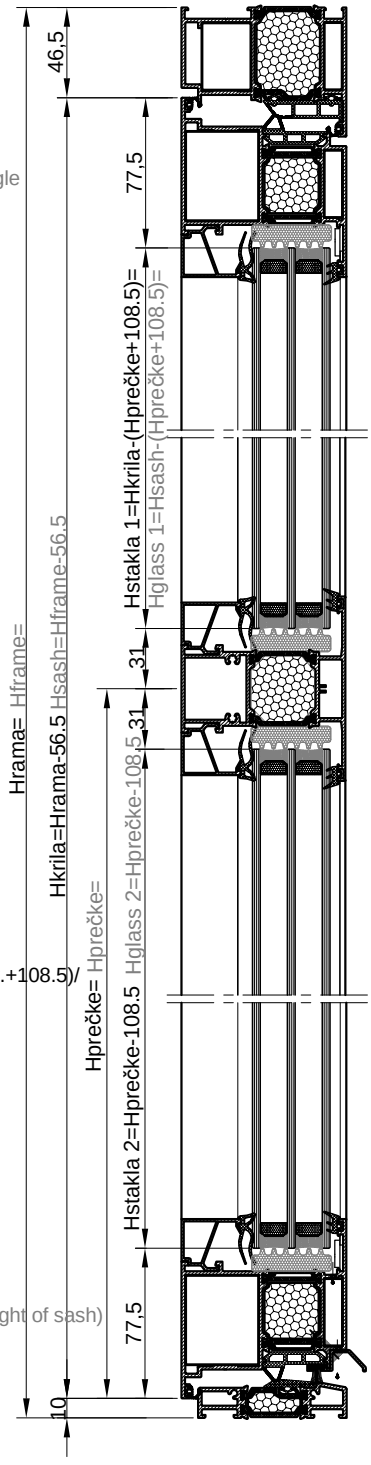


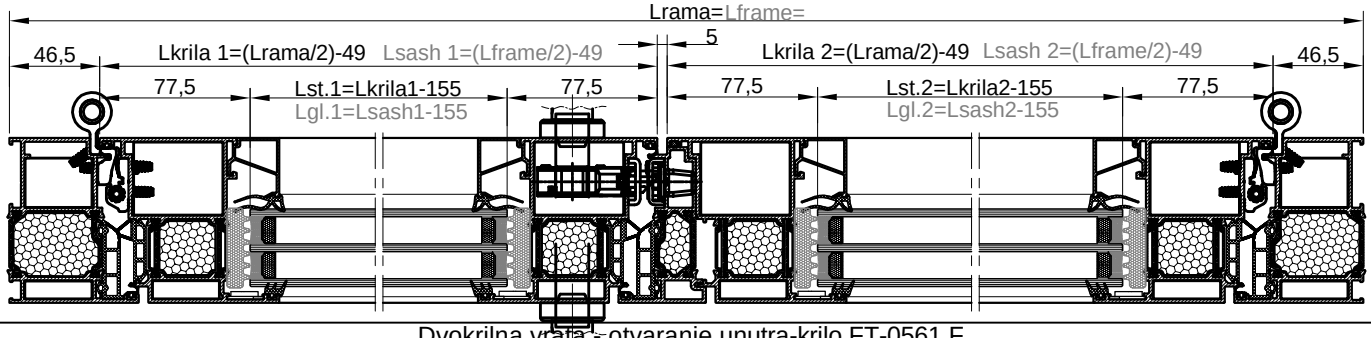


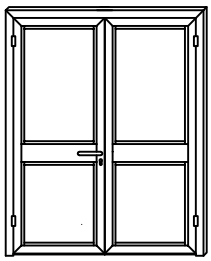
Dvokrilna vrata - otvaranje unutra-krilo FT-0563 F
Double-leaf door - inward opening-sash FT-0563 F



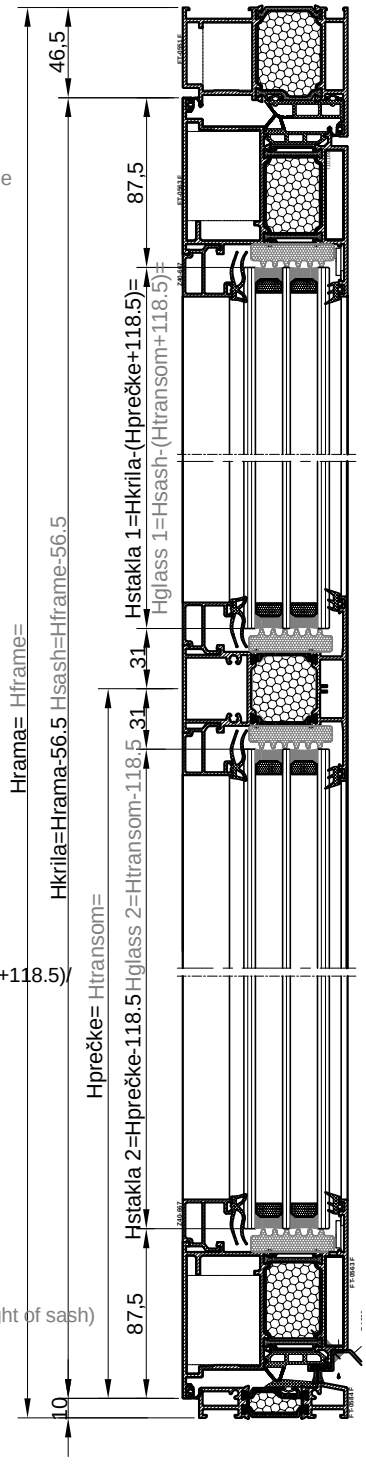
naziv name		mjera dimension	kom. pcs.	pilanje sawing angle
Ram FT-0551F	Frame FT-0551F	L	1	45-45
Ram FT-0551F	Frame FT-0551F	H	2	45-90
Krilo FT-0561F	Sash FT-0561F	(L/2)-49	4	45-45
Krilo FT-0561F	Sash FT-0561F	H-56.5	4	45-45
Prag FT-0584F	Threshold FT-0584F	L-164	1	90-90
Okapnica F-1200	Drip cap profile F-1200	Lkr-54	2	90-90
Staklo lajsna Z40-668	Glazing bead Z40-668	Lkr-141	8	90-90
Staklo lajsna Z40-668	Glazing bead Z40-668	Hpr.-137	4	90-90
Staklo lajsna Z40-668	Glazing bead Z40-668	H-(Hpr.+193.5)	4	90-90
Prečka FT-0575F	Transom FT-0575F	Lkr-128	2	90-90
Profil kombatute FT-0571F	Flying mullion FT-0571F	Hkr-57	1	90-90
Kutna spojnica 710.143	Corner bracket 710.143		2	
Kutna spojnica 710.141	Corner bracket 710.141		10	
Kutna spojnica 710.136	Corner bracket 710.136		8	
Kutna spojnica 731.010	Corner bracket 731.010		8	
Kutna spojnica 730.001	Corner bracket 730.001		18	
Veznik prečke 710.066	T bracket 710.066		8	
Veznik prečke 710.171	T bracket 710.171		8	
Centralna brtva rama 334.005	Central gasket-frame 334.005	1L+3H		
Centralna brtva krila 334.006	Central gasket-sash 334.006	4Lkr+3Hkr		
Brtva na spoju dva krila 321.006	Rebate gasket 321.006	1L+2H+4Lkr+4Hkr		
Brtva prema staklu vanjska 321.003	Glazing gasket -external- 321.003	8Lkr+4Hkr		
Brtva prema staklu unutarnja 311.004	Glazing gasket -internal-311.004	8Lkr+4Hkr		
Brtva praga 331.013	Threshold gasket 331.013	L-164	1	90-90
Četkica 7x9 347.003	Brush seal 7x9 347.003	Lkr-35	1	90-90
Četkica 7x9 347.003	Brush seal 7x9 347.003	Lkr-2	1	90-90
Izolacijski umetak 340.013	Underglass insulator 340.013	8(Lkr.-131)+4(Hpr.-108.5)+4/Hkr.-(Hpr.+108.5)/		
Čep okapnice F-1200 373.027	End cap for F-1200 373.027		2 para	
Umetak na pragu 373.019	End cap for threshold 373.019		1 par	
Čep kombatute 363.014	End cap for flying mullion 363.014		1 par	
Brava G-U Secury s MR2 (35) tri ključanja 122.016	Multipoint lock - G-U Secury MR2 (35) -122.016		1	
Brava G-U za pom. krilo (desna) 122.082	Lever-operated gear for passive leaf G-U (right) 122.082		1	
Gornji element za nastavljanje 122.026	Top shoot bolt unit 122.026		1	
Donji element za nastavljanje 122.027	Bottom shoot bolt unit 122.027		1	
Prihvatna pločica gore 122.028	Top striking plate 122.028		1	
Prihvatna pločica dolje 122.080	Bottom striking plate 122.080		1	
Trodijelna cilindrična šarka 112.011.01 - bijela	Barrel door hinge-3 part 112.011.01 - white	2 ili (3) po krilu ovisno o visini i tež.krila 2 or (3) per sash(dep. of height and weight of sash)		
Ručka za vrata 102.028	Door handle 102.028		2	
Četvrtka 102.025	Square spindle 102.025		1	
Cilindar (35-75) 122.095	Cylinder (35-75) 122.095		1	
Štitnik cilindra 122.098	Cylinder rosette 122.098		2	
Protuprovalni umetak 141.002	Security pin 141.002		4	
Staklo 40 mm	Glass 40 mm	(Lkr.-155)x(Hpr.-108.5)	2	
Staklo 40 mm	Glass 40 mm	(Lkr.-155)x/Hkr.-(Hpr.kr.+108.5)/	2	

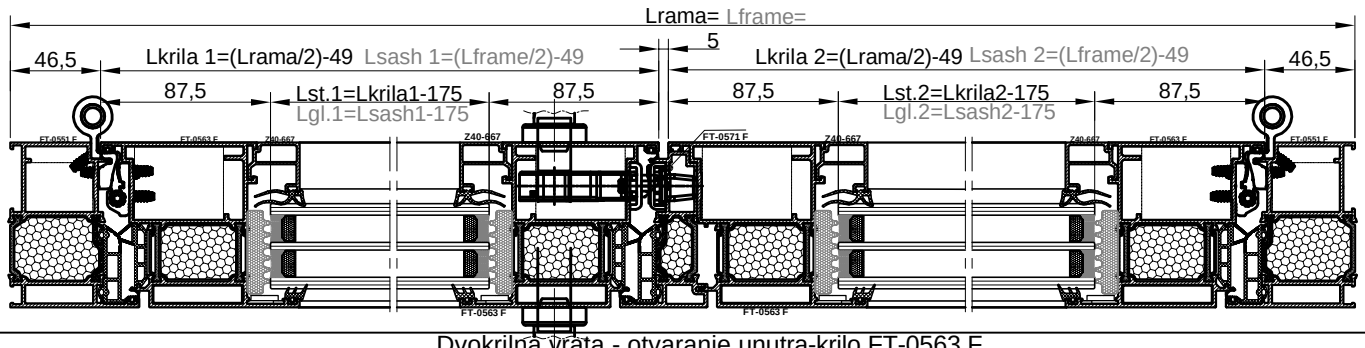


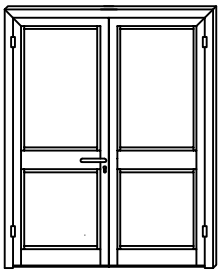




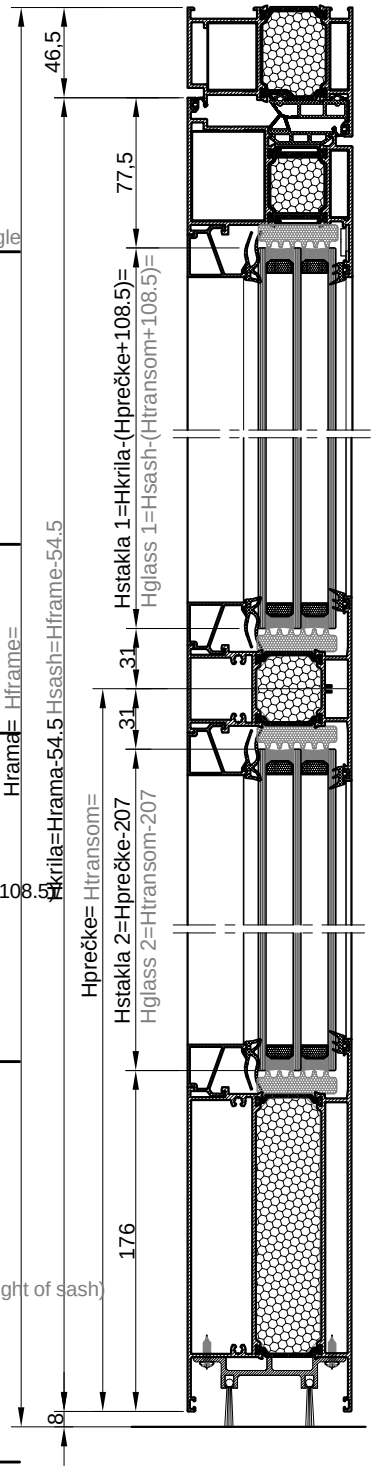
naziv name		mjera dimension	kom. pcs.	pilanje sawing angle
Ram FT-0551F	Frame FT-0551F	L	1	45-45
Ram FT-0551F	Frame FT-0551F	H	2	45-90
Krilo FT-0563F	Sash FT-0563F	(L/2)-49	4	45-45
Krilo FT-0563F	Sash FT-0563F	H-56.5	4	45-45
Prag FT-0584F	Threshold FT-0584F	L-164	1	90-90
Okapnica F-1200	Drip cap profile F-1200	Lkr-54	2	90-90
Staklo lajsna Z40-667	Glazing bead Z40-667	Lkr-161	8	90-90
Staklo lajsna Z40-667	Glazing bead Z40-667	Hpr.-147	4	90-90
Staklo lajsna Z40-667	Glazing bead Z40-667	H-(Hpr.+203.5)	4	90-90
Prečka FT-0575F	Transom FT-0575F	Lkr-151	2	90-90
Profil kombatute FT-0571F	Flying mullion FT-0571F	Hkr-57	1	90-90
Kutna spojnica 710.143	Corner bracket 710.143		2	
Kutna spojnica 710.141	Corner bracket 710.141		2	
Kutna spojnica 710.136	Corner bracket 710.136		8	
Kutna spojnica 710.169	Corner bracket 710.169		8	
Kutna spojnica 731.010	Corner bracket 731.010		8	
Kutna spojnica 730.001	Corner bracket 730.001		18	
Veznik prečke 710.066	T bracket 710.066		8	
Veznik prečke 710.171	T bracket 710.171		8	
Centralna brtva rama 334.005	Central gasket-frame 334.005	1L+3H		
Centralna brtva krila 334.006	Central gasket-sash 334.006	4Lkr+3Hkr		
Brtva na spoju dva krila 321.006	Rebate gasket 321.006	1L+2H+4Lkr+4Hkr		
Brtva prema staklu vanjska 321.003	Glazing gasket -external- 321.003	8Lkr+4Hkr		
Brtva prema staklu unutarnja 311.004	Glazing gasket -internal- 311.004	8Lkr+4Hkr		
Brtva praga 331.013	Threshold gasket 331.013	L-164	1	90-90
Četkica 7x9 347.003	Brush seal 7x9 347.003	Lkr-35	1	90-90
Četkica 7x9 347.003	Brush seal 7x9 347.003	Lkr-2	1	90-90
Izolacijski umetak 340.013	Underglass insulator 340.013	8(Lkr.-151)+4(Hpr.-118.5)+4/Hkr.-(Hpr.+118.5)/		
Čep okapnice F-1200 373.027	End cap for F-1200 373.027		2 para	
Umetak na pragu 373.019	End cap for threshold 373.019		1 par	
Čep kombatute 363.014	End cap for flying mullion 363.014		1 par	
Brava G-U Secury s MR2 (45) tri ključanja 122.015	Multipoint lock - G-U Secury MR2 (45) -122.015		1	
Brava G-U za pom. krilo (desna) 122.082	Lever-operated gear for passive leaf G-U (right) 122.082		1	
Gornji element za nastavljanje 122.026	Top shoot bolt unit 122.026		1	
Donji element za nastavljanje 122.027	Bottom shoot bolt unit 122.027		1	
Prihvatna pločica gore 122.028	Top striking plate 122.028		1	
Prihvatna pločica dolje 122.080	Bottom striking plate 122.080		1	
Trodijelna cilindrična šarka 112.011.01 - bijela	Barrel door hinge-3 part 112.011.01 - white	2 ili (3) po krilu ovisno o visini i tež.krila 2 or (3) per sash(dep. of height and weight of sash)		
Ručka za vrata 102.028	Door handle 102.028		2	
Četvrtka 102.025	Square spindle 102.025		1	
Cilindar (35-75) 122.095	Cylinder (35-75) 122.095		1	
Štitnik cilindra 122.098	Cylinder rosette 122.098		2	
Protuprovalni umetak 141.002	Security pin 141.002		4	
Staklo 40 mm	Glass 40 mm	(Lkr.-175)x(Hpr.-118.5)	2	
Staklo 40 mm	Glass 40 mm	(Lkr.-175)x/Hkr.-(Hpr.kr.+118.5)/	2	

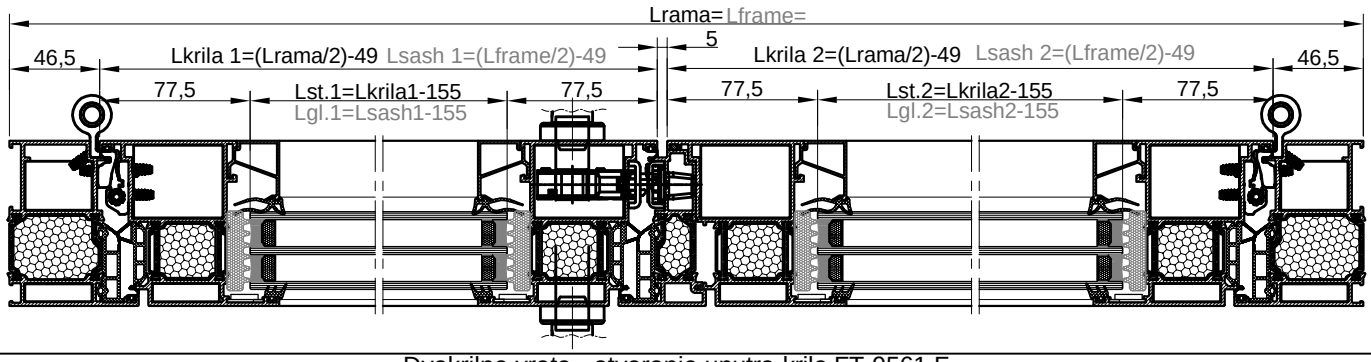


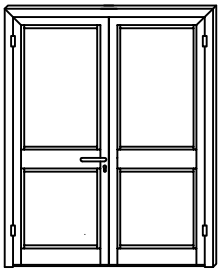




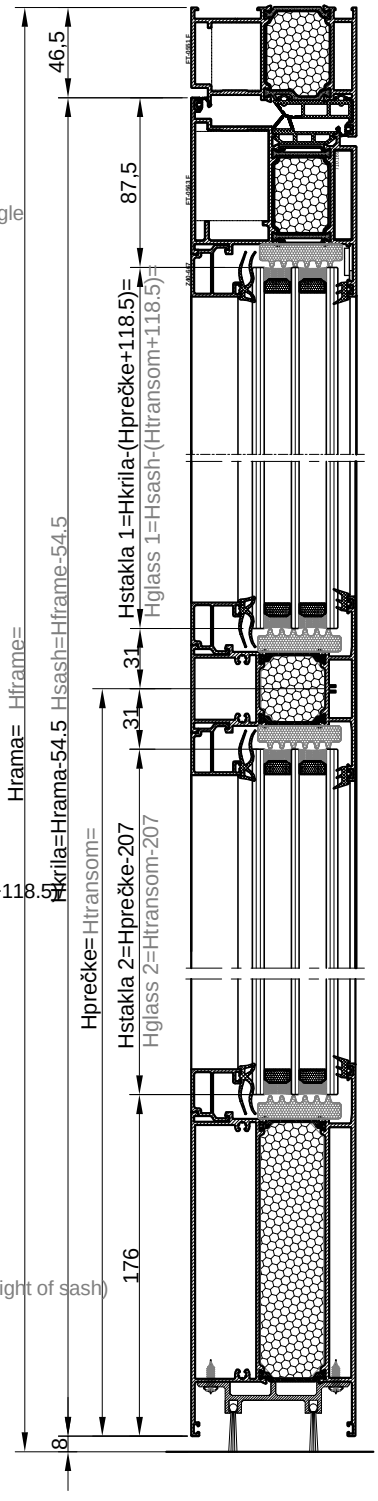
naziv name		mjera dimension	kom. pcs.	pilanje sawing angle
Ram FT-0551F	Frame FT-0551F	L	1	45-45
Ram FT-0551F	Frame FT-0551F	H	2	45-90
Krilo FT-0561F	Sash FT-0561F	(L/2)-49	2	45-45
Krilo FT-0561F	Sash FT-0561F	H-54.5	4	45-90
Staklo lajsna Z40-668	Glazing bead Z40-668	Lkr-141	8	90-90
Staklo lajsna Z40-668	Glazing bead Z40-668	Hpr.-233.5	4	90-90
Staklo lajsna Z40-668	Glazing bead Z40-668	H-(Hpr.+191.5)	4	90-90
Prečka FT-0575F	Transom FT-0575F	Lkr-128	2	90-90
Parapetna prečka FT-0576F	Tran.-bottom sash prof. FT-0576F	Lkr-128	2	90-90
Profil kombatute FT-0571F	Flying mullion FT-0571F	Hkr-28.5	1	90-90
Kutna spojnica 710.143	Corner bracket 710.143		2	
Kutna spojnica 710.141	Corner bracket 710.141		6	
Kutna spojnica 710.136	Corner bracket 710.136		4	
Kutna spojnica 731.010	Corner bracket 731.010		4	
Kutna spojnica 730.001	Corner bracket 730.001		10	
Veznik prečke 710.066	T bracket 710.066		16	
Veznik prečke 710.171	T bracket 710.171		16	
Centralna brtva rama 334.005	Central gasket-frame 334.005	1L+3H		
Centralna brtva krila 334.006	Central gasket-sash 334.006	2Lkr+3Hkr		
Brtva na spoju rama i krila 321.006	Rebate gasket 321.006	1L+2Lkr+4Hkr		
Brtva prema staklu vanjska 321.003	Glazing gasket -external- 321.003	8Lkr+4Hkr		
Brtva prema staklu unutarnja 311.004	Glazing gasket -internal- 311.004	8Lkr+4Hkr		
Izolacijski umetak 340.013	Underglass insulator 340.013	8(Lkr.-131)+4(Hpr.-207)+4/Hkr.-(Hpr.+108.5)		
Čep kombatute 363.014	End cap for flying mullion 363.014		1 par	
Pvc umetak u parap. prečki 374.048	Pvc prof. for transom /bottom sash prof./ 374.048	Lkr-18	1	
Pvc umetak u parap. prečki 374.048	Pvc prof. for transom /bottom sash prof./ 374.048	Lkr-33	1	
Četkasta brtva 347.001	Brush seal 347.001		4	
Brava G-U Secury s MR2 (35) tri ključanja 122.016	Multipoint lock - G-U Secury MR2 (35) -122.016		1	
Brava G-U za pom. krilo (desna) 122.082	Lever-operated gear for passive leaf G-U (right) 122.082		1	
Gornji element za nastavljanje 122.026	Top shoot bolt unit 122.026		1	
Donji element za nastavljanje 122.027	Bottom shoot bolt unit 122.027		1	
Prihvatna pločica gore 122.028	Top striking plate 122.028		1	
Podna čahura za osovinu Ø12 120.005	Brass floor socket (inside hole Ø12) 120.005		1	
Trodijelna cilindrična šarka 112.011.01 - bijela	Barrel door hinge-3 part 112.011.01 - white	2 ili (3) po krilu ovisno o visini i tež.krila 2 or (3) per sash(dep. of height and weight of sash)		
Ručka za vrata 102.028	Door handle 102.028		2	
Četvrtka 102.025	Square spindle 102.025		1	
Cilindar (35-75) 122.095	Cylinder (35-75) 122.095		1	
Štitnik cilindra 122.098	Cylinder rosette 122.098		2	
Protuprovalni umetak 141.002	Security pin 141.002		4	
Staklo 40 mm	Glass 40 mm	(Lkr.-155)x(Hpr.-207)	2	
Staklo 40 mm	Glass 40 mm	(Lkr.-155)x/Hkr.-(Hpr.kr.+108.5)/	2	

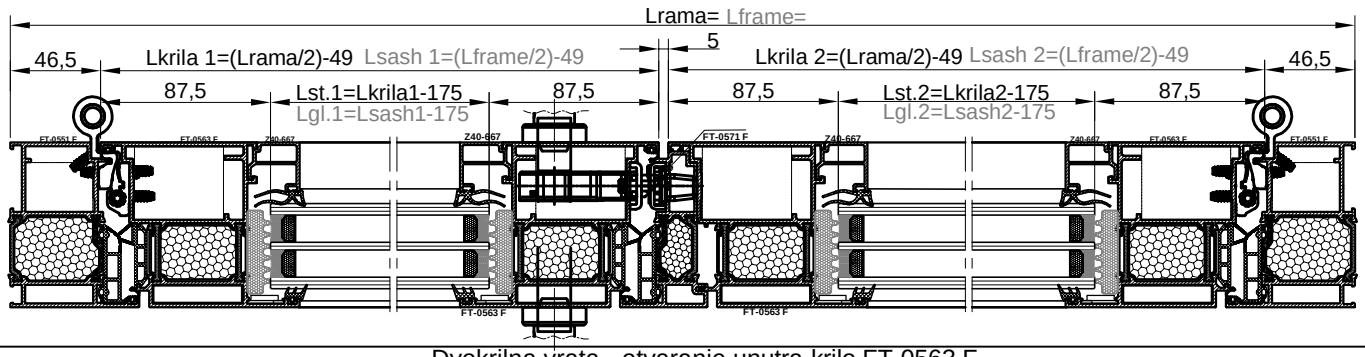


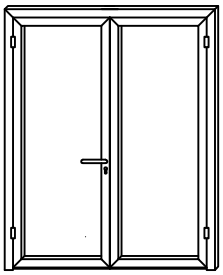




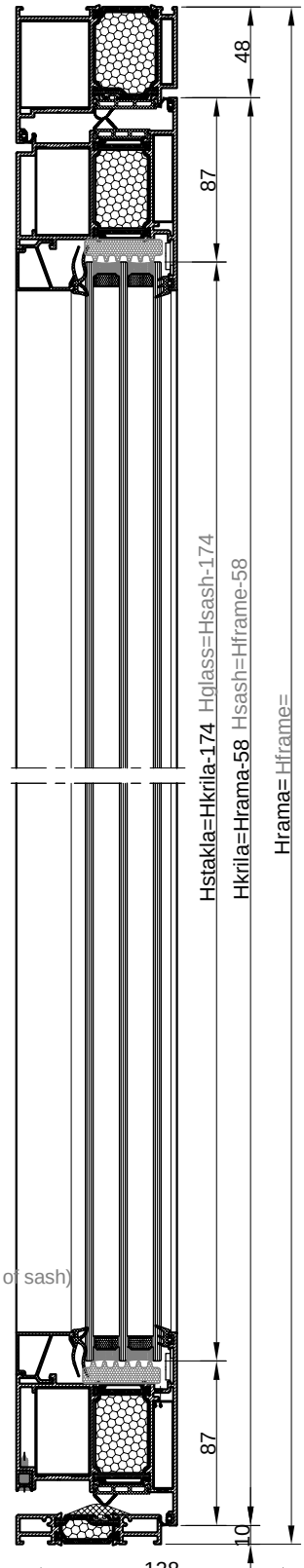
naziv name		mjera dimension	kom. pcs.	pilanje sawing angle
Ram FT-0551F	Frame FT-0551F	L	1	45-45
Ram FT-0551F	Frame FT-0551F	H	2	45-90
Krilo FT-0563F	Sash FT-0563F	(L/2)-49	2	45-45
Krilo FT-0563F	Sash FT-0563F	H-54.5	4	45-90
Staklo lajsna Z40-667	Glazing bead Z40-667	Lkr-161	8	90-90
Staklo lajsna Z40-667	Glazing bead Z40-667	Hpr.-233.5	4	90-90
Staklo lajsna Z40-667	Glazing bead Z40-667	H-(Hpr.+201.5)	4	90-90
Prečka FT-0575F	Transom FT-0575F	Lkr-151	2	90-90
Parapetna prečka FT-0576F	Tran.-bottom sash prof. FT-0576F	Lkr-151	2	90-90
Profil kombatute FT-0571F	Flying mullion FT-0571F	Hkr-28.5	1	90-90
Kutna spojnica 710.143	Corner bracket 710.143		2	
Kutna spojnica 710.141	Corner bracket 710.141		2	
Kutna spojnica 710.136	Corner bracket 710.136		4	
Kutna spojnica 710.169	Corner bracket 710.169		4	
Kutna spojnica 731.010	Corner bracket 731.010		4	
Kutna spojnica 730.001	Corner bracket 730.001		10	
Veznik prečke 710.066	T bracket 710.066		16	
Veznik prečke 710.171	T bracket 710.171		16	
Centralna brtva rama 334.005	Central gasket-frame 334.005	1L+3H		
Centralna brtva krila 334.006	Central gasket-sash 334.006	2Lkr+3Hkr		
Brtva na spoju rama i krila 321.006	Rebate gasket 321.006	1L+2Lkr+6Hkr		
Brtva prema staklu vanjska 321.003	Glazing gasket -external- 321.003	8Lkr+4Hkr		
Brtva prema staklu unutarnja 311.004	Glazing gasket -internal- 311.004	8Lkr+4Hkr		
Izolacijski umetak 340.013	Underglass insulator 340.013	8(Lkr.-151)+4(Hpr.-217)+4/Hkr.-(Hpr.+118.5)		
Čep kombatute 363.014	End cap for flying mullion 363.014		1 par	
Pvc umetak u parap. prečki 374.048	Pvc prof. for transom /bottom sash prof./ 374.048	Lkr-18	1	
Pvc umetak u parap. prečki 374.048	Pvc prof. for transom /bottom sash prof./374.048	Lkr-33	1	
Četkasta brtva 347.001	Brush seal 347.001		4	
Brava G-U Secury s MR2 (45) tri ključanja 122.015	Multipoint lock - G-U Secury MR2 (45) -122.015		1	
Brava G-U za pom. krilo (desna) 122.082	Lever-operated gear for passive leaf G-U (right) 122.082		1	
Gornji element za nastavljanje 122.026	Top shoot bolt unit 122.026		1	
Donji element za nastavljanje 122.027	Bottom shoot bolt unit 122.027		1	
Prihvatna pločica gore 122.028	Top striking plate 122.028		1	
Podna čahura za osovinu Ø12 120.005	Brass floor socket (inside hole Ø12) 120.005		1	
Trodijelna cilindrična šarka 112.011.01 - bijela	Barrel door hinge-3 part 112.011.01 - white	2 ili (3) po krilu ovisno o visini i tež.krila 2 or (3) per sash(dep. of height and weight of sash)		
Ručka za vrata 102.028	Door handle 102.028		2	
Četvrtka 102.025	Square spindle 102.025		1	
Cilindar (35-75) 122.095	Cylinder (35-75) 122.095		1	
Štitnik cilindra 122.098	Cylinder rosette 122.098		2	
Protuprovalni umetak 141.002	Security pin 141.002		4	
Staklo 44 mm	Glass 44 mm	(Lkr.-175)x(Hpr.-207)	2	
Staklo 44 mm	Glass 44 mm	(Lkr.-175)x/Hkr.-(Hpr.kr.+118.5)/	2	

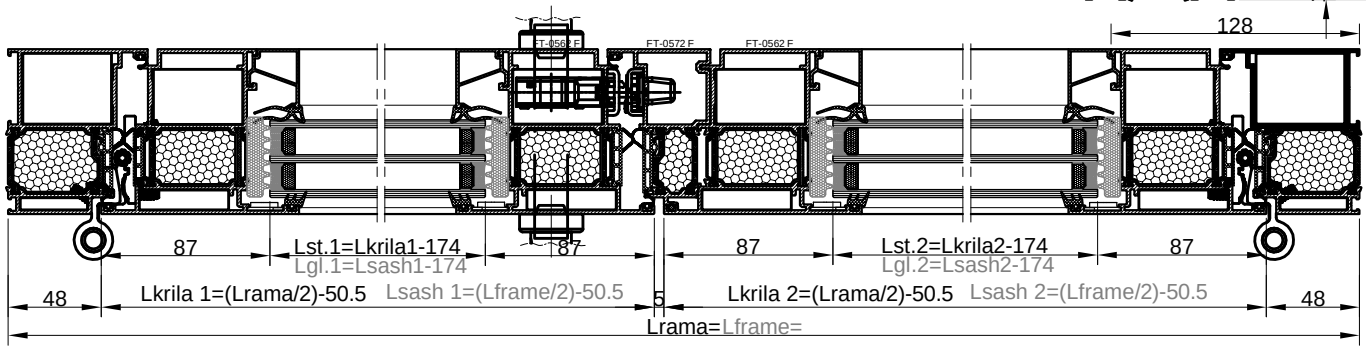


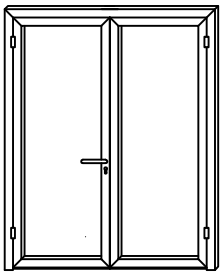




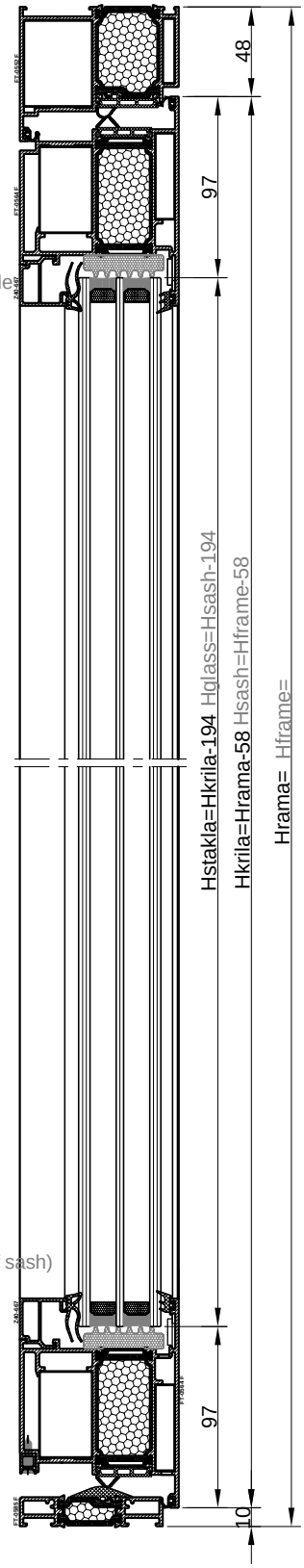
naziv name		mjera dimension	kom. pcs.	pilanje sawing angle
Ram FT-0552F	Frame FT-0552F	L	1	45-45
Ram FT-0552F	Frame FT-0552F	H	2	45-90
Krilo FT-0562F	Sash FT-0562F	(L/2)-50.5	4	45-45
Krilo FT-0562F	Sash FT-0562F	H-58	4	45-45
Prag FT-0585F	Threshold FT-0585F	L-154	1	90-90
Umetak F-1188	Additional profile F-1188	Lkr-58	2	90-90
Staklo lajsna Z40-668	Glazing bead Z40-668	Lkr-160	4	90-90
Staklo lajsna Z40-668	Glazing bead Z40-668	Hkr-204	4	90-90
Profil za prebacivanje FT-0572F	Flying mullion FT-0572F	Hkr-65	1	90-90
Kutna spojnica 710.131	Corner bracket 710.131		2	
Kutna spojnica 710.133	Corner bracket 710.133		8	
Kutna spojnica 710.140	Corner bracket 710.140		2	
Kutna spojnica 710.134	Corner bracket 710.134		8	
Kutna spojnica 731.010	Corner bracket 731.010		8	
Kutna spojnica 730.001	Corner bracket 730.001		18	
Centralna brtva rama 334.009	Central gasket-frame 334.009	1Lrama+3Hkr		
Centralna brtva krila 334.010	Central gasket-sash 334.010	4Lkr+3Hkr		
Centralna brtva praga 331.012	Threshold gasket 331.012	L-154	1	90-90
Brtva prema staklu vanjska 321.003	Glazing gasket -external- 321.003	4Lkr+4Hkr		
Brtva prema staklu unutarnja 311.004	Glazing gasket -internal- 311.004	4Lkr+4Hkr		
Brtva na spoju rama i krila 321.006	Rebate gasket 321.006	1Lrama+4Lkr+6Hkr		
Izolacijski umetak 340.013	Underglass insulator 340.013	4(Lkr-150)+4(Hkr-174)		
Umetak na pragu 373.020	End cap for threshold 373.020		1 par	
Čep kombatute 363.016	End cap for flying mullion 363.016		1 par	
Brava G-U Secury s MR2 (35) tri ključanja 122.016	Multipoint lock - G-U Secury MR2 (35) -122.016		1	
Brava G-U za pom. krilo (lijeva) 122.025	Lever-operated gear for passive leaf G-U (left) 122.025		1	
Gornji element za nastavljanje 122.026	Top shoot bolt unit 122.026		1	
Donji element za nastavljanje 122.027	Bottom shoot bolt unit 122.027		1	
Prihvatna pločica gore 122.028	Top striking plate 122.028		1	
Prihvatna pločica dolje 122.080	Bottom striking plate 122.080		1	
Trodijelna cilindrična šarka 112.012.01 - bijela	Barrel door hinge-3 part 112.012.01 - white	2 ili (3) po krilu ovisno o visini i tež.krila 2 or (3) per sash(dep. of height and weight of sash)		
Ručka za vrata 102.028	Door handle 102.028		2	
Cilindar (35-75) 122.095	Cylinder (35-75) 122.095		1	
Štitnik cilindra 122.098	Cylinder rosette 122.098		2	
Protuprovalni umetak 141.002	Security pin 141.002		4	
Vijak 433.093	Screw 433.093		6	
Staklo 40 mm	Glass 40 mm	(Lkr.-174)x(Hkr.-174)	2	

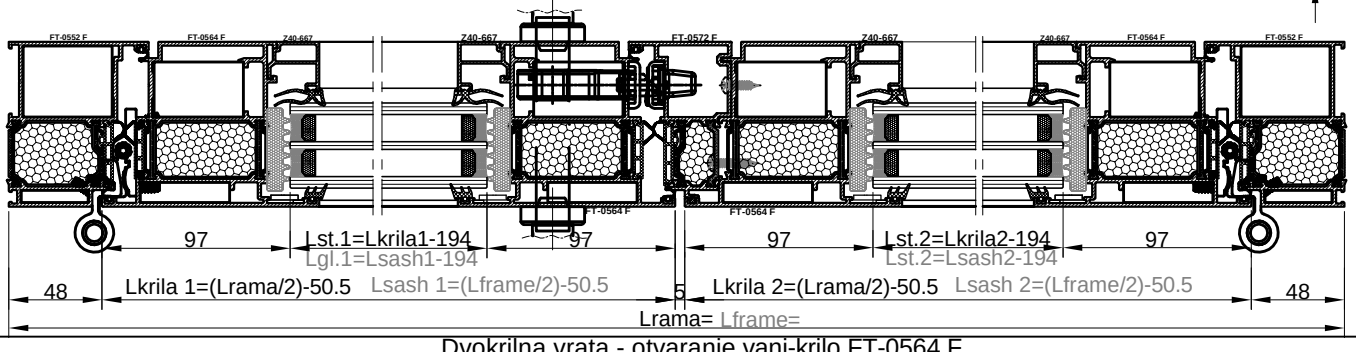


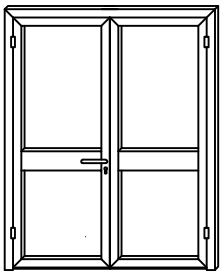




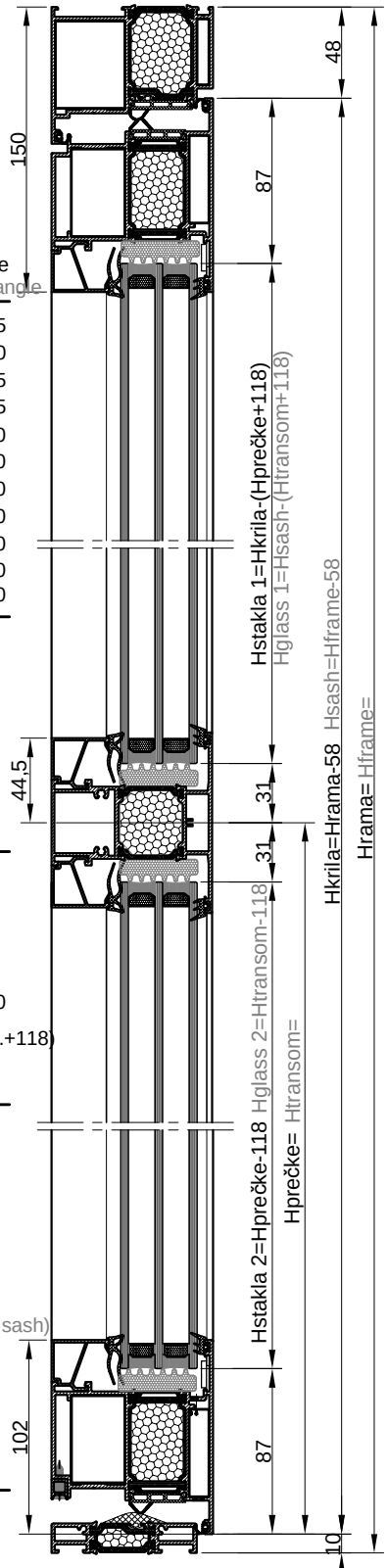
naziv name		mjera dimension	kom. pcs.	pilanje sawing angle
Ram FT-0552F	Frame FT-0552F	L	1	45-45
Ram FT-0552F	Frame FT-0552F	H	2	45-90
Krilo FT-0564F	Sash FT-0564F	(L/2)-50.5	4	45-45
Krilo FT-0564F	Sash FT-0564F	H-58	4	45-45
Prag FT-0585F	Threshold FT-0585F	L-154	1	90-90
Umetak F-1188	Additional profile F-1188	Lkr-58	2	90-90
Staklo lajsna Z40-667	Glazing bead Z40-667	Lkr-180	4	90-90
Staklo lajsna Z40-667	Glazing bead Z40-667	Hkr-224	4	90-90
Profil za prebacivanje FT-0572F	Flying mullion FT-0572F	Hkr-65	1	90-90
Kutna spojnica 710.131	Corner bracket 710.131		2	
Kutna spojnica 710.133	Corner bracket 710.133		8	
Kutna spojnica 710.140	Corner bracket 710.140		2	
Kutna spojnica 710.134	Corner bracket 710.134		8	
Kutna spojnica 731.010	Corner bracket 731.010		8	
Kutna spojnica 730.001	Corner bracket 730.001		10	
Centralna brtva rama 334.009	Central gasket-frame 334.009	1Lrama+3Hkr		
Centralna brtva krila 334.010	Central gasket-sash 334.010	4Lkr+3Hkr		
Centralna brtva praga 331.012	Threshold gasket 331.012	L-154	1	90-90
Brtva prema staklu vanjska 321.003	Glazing gasket -external- 321.003	4Lkr+4Hkr		
Brtva prema staklu unutarnja 311.004	Glazing gasket -internal- 311.004	4Lkr+4Hkr		
Brtva na spoju rama i krila 321.006	Rebate gasket 321.006	1Lrama+4Lkr+6Hkr		
Izolacijski umetak 340.013	Underglass insulator 340.013	4(Lkr-170)+4(Hkr-194)		
Umetak na pragu 373.020	End cap for threshold 373.020		1 par	
Čep kombatute 363.016	End cap for flying mullion 363.016		1 par	
Brava G-U Secury s MR2 (45) tri ključanja 122.015	Multipoint lock - G-U Secury MR2 (45) -122.015		1	
Brava G-U za pom. krilo (lijeva) 122.025	Lever-operated gear for passive leaf G-U (left) 122.025		1	
Gornji element za nastavljanje 122.026	Top shoot bolt unit 122.026		1	
Donji element za nastavljanje 122.027	Bottom shoot bolt unit 122.027		1	
Prihvatna pločica gore 122.028	Top striking plate 122.028		1	
Prihvatna pločica dolje 122.080	Bottom striking plate 122.080		1	
Trodijelna cilindrična šarka 112.012.01 - bijela	Barrel door hinge-3 part 112.012.01 - white	2 ili (3) po krilu ovisno o visini i tež.krila 2 or (3) per sash(dep. of height and weight of sash)		
Ručka za vrata 102.028	Door handle 102.028		2	
Četvrtka 102.025	Square spindle 102.025		1	
Cilindar (35-75) 122.095	Cylinder (35-75) 122.095		1	
Štitnik cilindra 122.098	Cylinder rosette 122.098		2	
Protuprovalni umetak 141.002	Security pin 141.002		4	

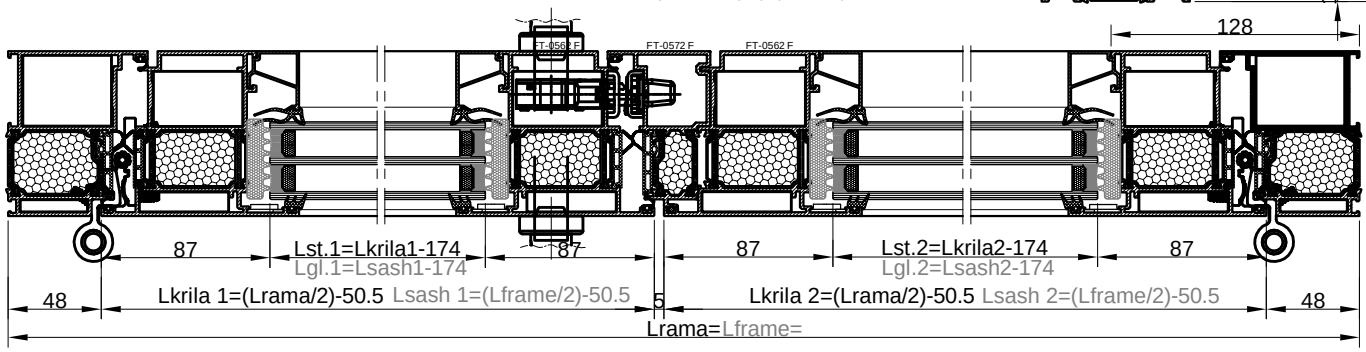


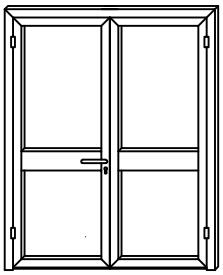




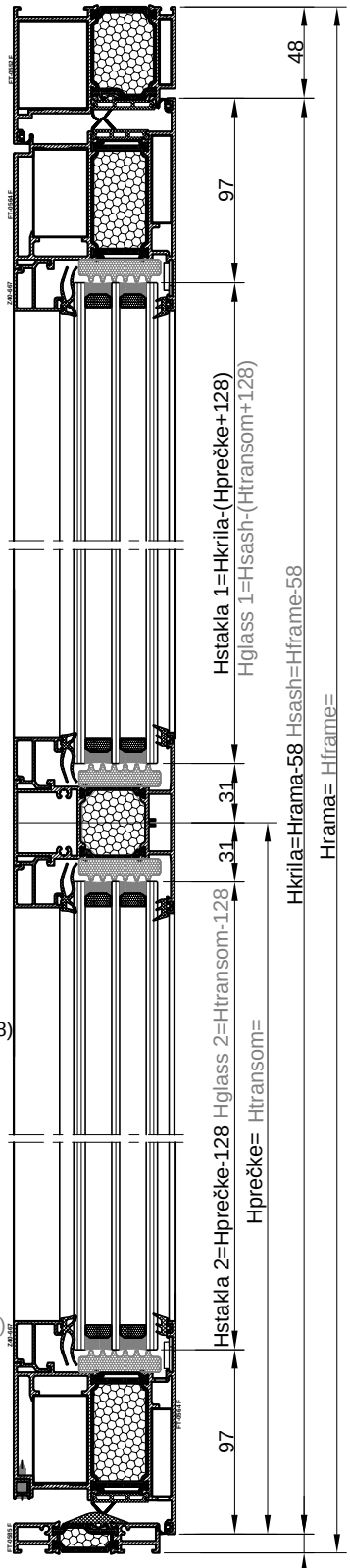
naziv name		mjera dimension	kom. pcs.	pilanje sawing angle
Ram FT-0552F	Frame FT-0552F	L	1	45-45
Ram FT-0552F	Frame FT-0552F	H	2	45-90
Krilo FT-0562F	Sash FT-0562F	L/2-50.5	4	45-45
Krilo FT-0562F	Sash FT-0562F	H-58	4	45-45
Prag FT-0585F	Threshold FT-0585F	L-154	1	90-90
Umetak F-1188	Additional profile F-1188	Lkr-58	2	90-90
Staklo lajsna Z40-668	Glazing bead Z40-668	Lkr-160	8	90-90
Staklo lajsna Z40-668	Glazing bead Z40-668	Hpr.-146.5	4	90-90
Staklo lajsna Z40-668	Glazing bead Z40-668	H-(Hpr.+204.5)	4	90-90
Prečka FT-0575F	Transom FT-0575F	Lkr-147	2	90-90
Profil za prebacivanje FT-0572F	Flying mullion FT-0572F	Hkr-65	1	90-90
Kutna spojnica 710.131	Corner bracket 710.131		2	
Kutna spojnica 710.133	Corner bracket 710.133		8	
Kutna spojnica 710.140	Corner bracket 710.140		2	
Kutna spojnica 710.134	Corner bracket 710.134		8	
Kutna spojnica 731.010	Corner bracket 731.010		8	
Kutna spojnica 730.001	Corner bracket 730.001		18	
Veznik prečke 710.066	T bracket 710.066		8	
Veznik prečke 710.171	T bracket 710.171		8	
Centralna brtva rama 334.009	Central gasket-frame 334.009	1Lrama+3Hrama		
Centralna brtva krila 334.010	Central gasket-sash 334.010	4Lkr+3Hkr		
Brtva prema staklu vanjska 321.003	Glazing gasket -external- 321.003	8Lkr+4Hkr		
Brtva prema staklu unutarnja 311.004	Glazing gasket -internal- 311.004	8Lkr+4Hkr		
Brtva na spoju rama i krila 321.006	Rebate gasket 321.006	1Lrama+2Hrama+4Lkr+4Hkr		
Brtva praga 331.012	Threshold gasket 331.012	L-154	1	90-90
Izolacijski umetak 340.013	Underglass insulator 340.013	8(Lkr.-150)+4(Hpr.-118)+4/Hkr.-(Hpr.+118)		
Umetak na pragu 373.020	End cap for threshold 373.020		1 par	
Čep kombatute 363.016	End cap for flying mullion 363.016		1 par	
Brava G-U Secury s MR2 (35) tri ključanja 122.016	Multipoint lock - G-U Secury MR2 (35) -122.016		1	
Brava G-U za pom. krilo (lijeva) 122.025	Lever-operated gear for passive leaf G-U (left) 122.025		1	
Gornji element za nastavljanje 122.026	Top shoot bolt unit 122.026		1	
Donji element za nastavljanje 122.027	Bottom shoot bolt unit 122.027		1	
Prihvatna pločica gore 122.028	Top striking plate 122.028		1	
Prihvatna pločica dolje 122.080	Bottom striking plate 122.080		1	
Trodijelna cilindrična šarka 112.012.01 - bijela	Barrel door hinge-3 part 112.012.01 - white	2 ili (3) po krilu ovisno o visini i tež.krila 2 or (3) per sash(dep. of height and weight of sash)		
Ručka za vrata 102.028	Door handle 102.028		2	
Četvrtka 102.025	Square spindle 102.025		1	
Cilindar (35-75) 122.095	Cylinder (35-75) 122.095		1	
Štitnik cilindra 122.098	Cylinder rosette 122.098		2	
Protuprovalni umetak 141.002	Security pin 141.002		4	
Staklo 40 mm	Glass 40 mm	(Lkr.-174)x/Hkr.-(Hpr.+118)/	2	
Staklo 40 mm	Glass 40 mm	(Lkr.-174)x(Hpr.-118)	2	

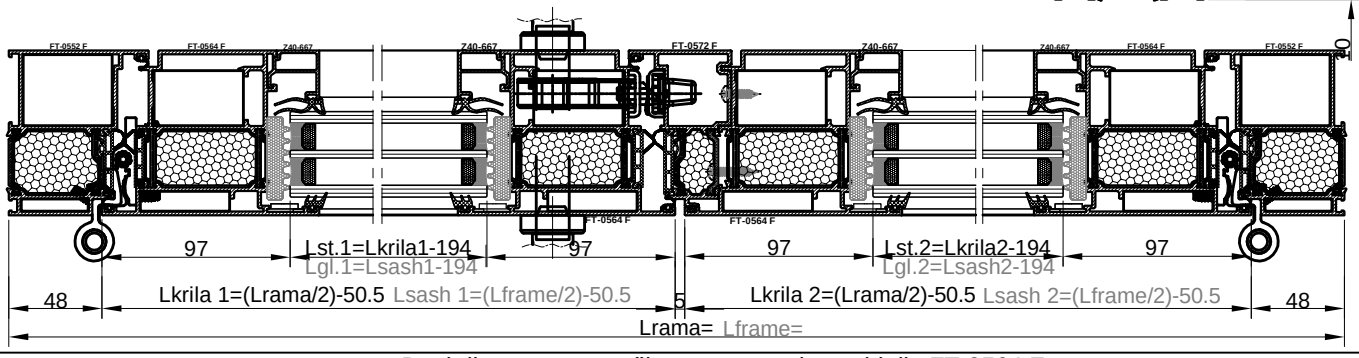


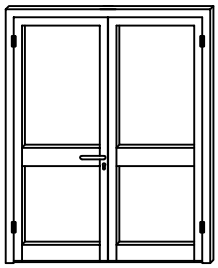




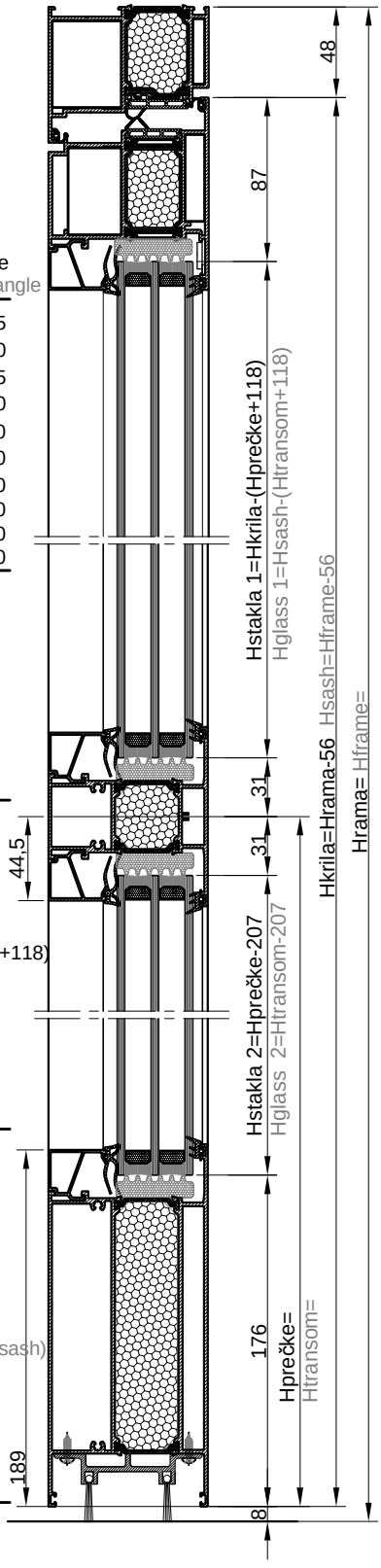
naziv name		mjera dimension	kom. pcs.	pilanje sawing angle
Ram FT-0552F	Frame FT-0552F	L	1	45-45
Ram FT-0552F	Frame FT-0552F	H	2	45-90
Krilo FT-0564F	Sash FT-0564F	L/2-50.5	4	45-45
Krilo FT-0564F	Sash FT-0564F	H-58	4	45-45
Prag FT-0585F	Threshold FT-0585F	L-154	1	90-90
Umetak F-1188	Additional profile F-1188	Lkr-58	2	90-90
Staklo lajsna Z40-667	Glazing bead Z40-667	Lkr-180	8	90-90
Staklo lajsna Z40-667	Glazing bead Z40-667	Hpr.-156.5	4	90-90
Staklo lajsna Z40-667	Glazing bead Z40-667	H-(Hpr.+214.5)	4	90-90
Prečka FT-0575F	Transom FT-0575F	Lkr-167	2	90-90
Profil za prebacivanje FT-0572F	Flying mullion FT-0572F	Hkr-65	1	90-90
Kutna spojnica 710.131	Corner bracket 710.131		2	
Kutna spojnica 710.133	Corner bracket 710.133		8	
Kutna spojnica 710.140	Corner bracket 710.140		2	
Kutna spojnica 710.134	Corner bracket 710.134		8	
Kutna spojnica 731.010	Corner bracket 731.010		8	
Kutna spojnica 730.001	Corner bracket 730.001		18	
Veznik prečke 710.066	T bracket 710.066		8	
Veznik prečke 710.171	T bracket 710.171		8	
Centralna brtva rama 334.009	Central gasket-frame 334.009	1Lrama+3Hrama		
Centralna brtva krila 334.010	Central gasket-sash 334.010	4Lkr+3Hkr		
Brtva prema staklu vanjska 321.003	Glazing gasket -external- 321.003	8Lkr+4Hkr		
Brtva prema staklu unutarnja 311.004	Glazing gasket -internal- 311.004	8Lkr+4Hkr		
Brtva na spoju rama i krila 321.006	Rebate gasket 321.006	1Lrama+2Hrama+4Lkr+4Hkr		
Brtva praga 331.012	Threshold gasket 331.012	L-154	1	90-90
Izolacijski umetak 340.013	Underglass insulator 340.013	8(Lkr.-170)+4(Hpr.-128)+4/Hkr.-(Hpr.+128)		
Umetak na pragu 373.020	End cap for threshold 373.020		1 par	
Čep kombatute 363.016	End cap for flying mullion 363.016		1 par	
Brava G-U Secury s MR2 (45) tri ključanja 122.015	Multipoint lock - G-U Secury MR2 (45) -122.015		1	
Brava G-U za pom. krilo (lijeva) 122.025	Lever-operated gear for passive leaf G-U (left) 122.025		1	
Gornji element za nastavljanje 122.026	Top shoot bolt unit 122.026		1	
Donji element za nastavljanje 122.027	Bottom shoot bolt unit 122.027		1	
Prihvatna pločica gore 122.028	Top striking plate 122.028		1	
Prihvatna pločica dolje 122.080	Bottom striking plate 122.080		1	
Trodijelna cilindrična šarka 112.012.01 - bijela	Barrel door hinge-3 part 112.012.01 - white	2 ili (3) po krilu ovisno o visini i tež.krila 2 or (3) per sash(dep. of height and weight of sash)		
Ručka za vrata 102.028	Door handle 102.028		2	
Četvrtka 102.025	Square spindle 102.025		1	
Cilindar (35-75) 122.095	Cylinder (35-75) 122.095		1	
Štitnik cilindra 122.098	Cylinder rosette 122.098		2	
Protuprovalni umetak 141.002	Security pin 141.002		4	
Staklo 44 mm	Glass 44 mm	(Lkr.-194)x/Hkr.-(Hpr.+128)/	2	
Staklo 44 mm	Glass 44 mm	(Lkr.-194)x(Hpr.-128)	2	

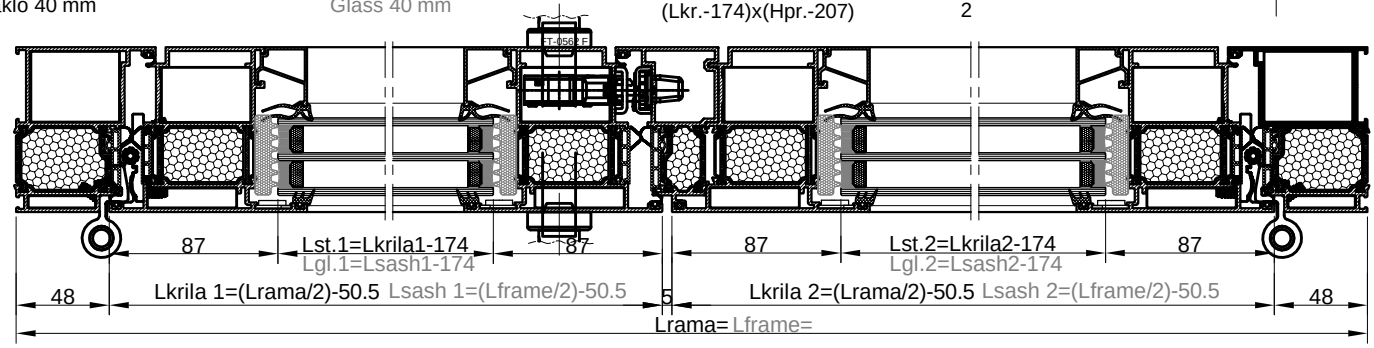


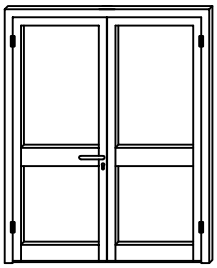




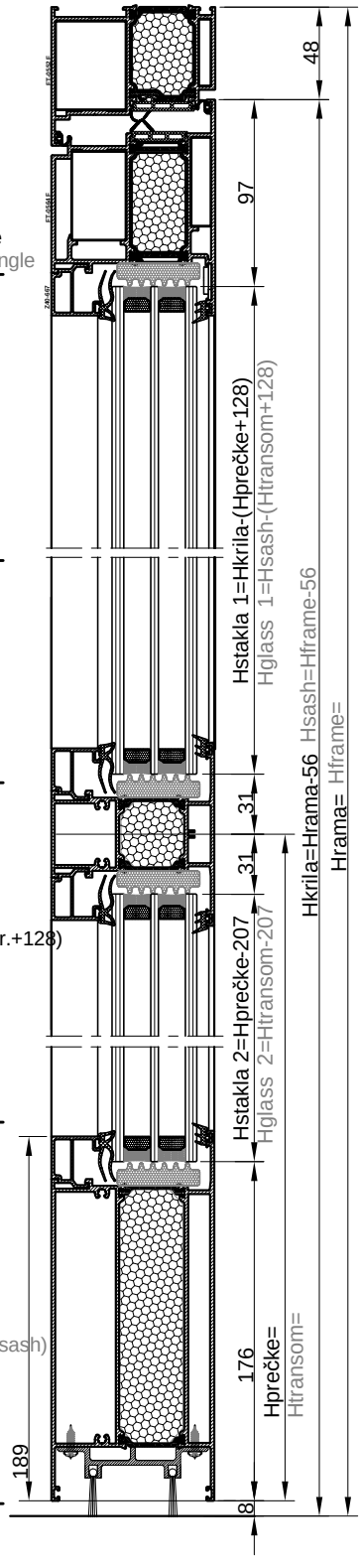
naziv name		mjera dimension	kom. pcs.	pilanje sawing angle
Ram FT-0552F	Frame FT-0552F	L	1	45-45
Ram FT-0552F	Frame FT-0552F	H	2	45-90
Krilo FT-0562F	Sash FT-0562F	L/2-50.5	2	45-45
Krilo FT-0562F	Sash FT-0562F	H-56	4	45-90
Staklo lajsna Z40-668	Glazing bead Z40-668	Lkr-160	8	90-90
Staklo lajsna Z40-668	Glazing bead Z40-668	Hpr.-233.5	4	90-90
Staklo lajsna Z40-668	Glazing bead Z40-668	H-(Hpr.+202.5)	4	90-90
Prečka FT-0575F	Transom FT-0575F	Lkr-147	2	90-90
Parapetna prečka FT-0576F	Tran.-bottom sash prof. FT-0576F	Lkr-147	2	90-90
Profil za prebacivanje FT-0572F	Flying mullion FT-0572F	Hkr-32.5	1	90-90
Kutna spojnica 710.131	Corner bracket 710.131		2	
Kutna spojnica 710.133	Corner bracket 710.133		4	
Kutna spojnica 710.140	Corner bracket 710.140		2	
Kutna spojnica 710.134	Corner bracket 710.134		4	
Kutna spojnica 731.010	Corner bracket 731.010		4	
Kutna spojnica 730.001	Corner bracket 730.001		10	
Veznik prečke 710.066	T bracket 710.066		16	
Veznik prečke 710.171	T bracket 710.171		16	
Centralna brtva rama 334.009	Central gasket-frame 334.009	1Lrama+3Hrama		
Centralna brtva krila 334.010	Central gasket-sash 334.010	2Lkrila+3Hkrila		
Brtva prema staklu vanjska 321.003	Glazing gasket -external- 321.003	8Lk+4Hkr		
Brtva prema staklu unutarnja 311.004	Glazing gasket -internal- 311.004	8Lkr+4Hkr		
Brtva na spoju rama i krila 321.006	Rebate gasket 321.006	1Lrama+2Lkr+6Hkr		
Izolacijski umetak 340.013	Underglass insulator 340.013	8(Lkr.-150)+4(Hpr.-207)+4/Hkr.-(Hpr.+118)		
Čep kombatute 363.016	End cap for flying mullion 363.016		1 par	
Pvc umetak u parap. prečki 374.048	Pvc profile for transom /bottom sash profile/ 374.048	Lkr-19	1	
Pvc umetak u parap. prečki 374.048	Pvc profile for transom /bottom sash profile/ 374.048	Lkr-54	1	
Četkasta brtva 347.001	Brush seal 347.001		4	
Brava G-U Secury s MR2 (35) tri ključanja 122.016	Multipoint lock - G-U Secury MR2 (35) -122.016		1	
Brava G-U za pom. krilo (lijeva) 122.025	Lever-operated gear for passive leaf G-U (left) 122.025		1	
Gornji element za nastavljanje 122.026	Top shoot bolt unit 122.026		1	
Donji element za nastavljanje 122.027	Bottom shoot bolt unit 122.027		1	
Prihvatna pločica gore 122.028	Top striking plate 122.028		1	
Podna čahura za Ø12 120.005	Brass floor socket (inside hole Ø12) 120.005		1	
Trodijelna cilindrična šarka 112.012.01 - bijela	Barrel door hinge-3 part 112.012.01 - white	2 ili (3) po krilu ovisno o visini i tež.krila 2 or (3) per sash(dep. of height and weight of sash)		
Ručka za vrata 102.028	Door handle 102.028		2	
Četvrtka 102.025	Square spindle 102.025		1	
Cilindar (35-75) 122.095	Cylinder (35-75) 122.095		1	
Štitnik cilindra 122.098	Cylinder rosette 122.098		2	
Protuprovalni umetak 141.002	Security pin 141.002		4	
Staklo 40 mm	Glass 40 mm	(Lkr.-174)x/Hkr.-(Hpr.+118)/	2	
Staklo 40 mm	Glass 40 mm	(Lkr.-174)x(Hpr.-207)	2	

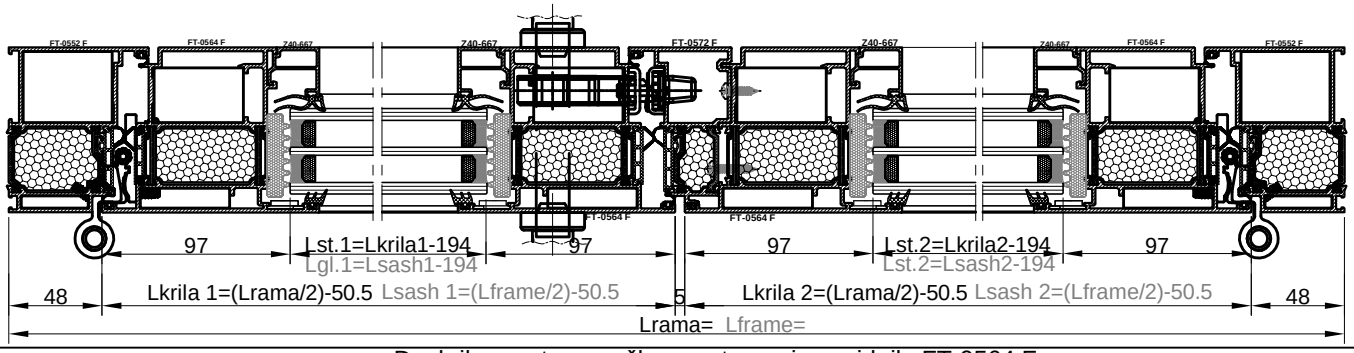


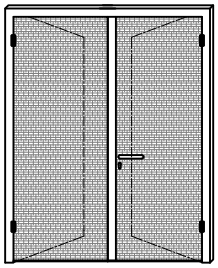




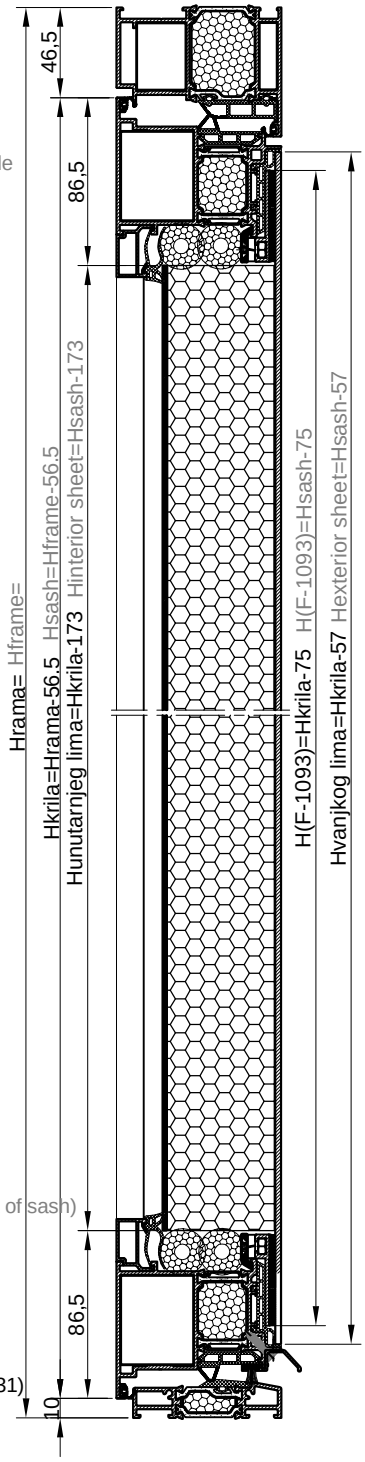
naziv name		mjera dimension	kom. pcs.	pilanje sawing angle
Ram FT-0552F	Frame FT-0552F	L	1	45-45
Ram FT-0552F	Frame FT-0552F	H	2	45-90
Krilo FT-0564F	Sash FT-0564F	L/2-50.5	2	45-45
Krilo FT-0564F	Sash FT-0564F	H-56	4	45-90
Staklo lajsna Z40-667	Glazing bead Z40-667	Lkr-180	8	90-90
Staklo lajsna Z40-667	Glazing bead Z40-667	Hpr.-233.5	4	90-90
Staklo lajsna Z40-667	Glazing bead Z40-667	H-(Hpr.+212.5)	4	90-90
Prečka FT-0575F	Transom FT-0575F	Lkr-167	2	90-90
Parapetna prečka FT-0576F	Transom-bottom sash prof. FT-0576F	Lkr-167	2	90-90
Profil za prebacivanje FT-0572F	Flying mullion FT-0572F	Hkr-32.5	1	90-90
Kutna spojnica 710.131	Corner bracket 710.131		2	
Kutna spojnica 710.133	Corner bracket 710.133		4	
Kutna spojnica 710.140	Corner bracket 710.140		2	
Kutna spojnica 710.134	Corner bracket 710.134		4	
Kutna spojnica 731.010	Corner bracket 731.010		4	
Kutna spojnica 730.001	Corner bracket 730.001		10	
Veznik prečke 710.066	T bracket 710.066		16	
Veznik prečke 710.171	T bracket 710.171		16	
Centralna brtva rama 334.009	Central gasket-frame 334.009	1Lrama+3Hrama		
Centralna brtva krila 334.010	Central gasket-sash 334.010	2Lkrila+3Hkrila		
Brtva prema staklu vanjska 321.003	Glazing gasket -external- 321.003	8Lk+4Hkr		
Brtva prema staklu unutarnja 311.004	Glazing gasket -internal- 311.004	8Lkr+4Hkr		
Brtva na spoju rama i krila 321.006	Rebate gasket 321.006	1Lrama+2Lkr+6Hkr		
Izolacijski umetak 340.013	Underglass insulator 340.013	8(Lkr.-170)+4(Hpr.-207)+4/Hkr.-(Hpr.+128)		
Čep kombatute 363.016	End cap for flying mullion 363.016		1 par	
Pvc umetak u parap. prečki 374.048	Pvc profile for transom /bottom sash profile/ 374.048	Lkr-19	1	
Pvc umetak u parap. prečki 374.048	Pvc profile for transom /bottom sash profile/ 374.048	Lkr-54	1	
Četkasta brtva 347.001	Brush seal 347.001		4 Lkr	
Brava G-U Secury s MR2 (45) tri ključanja 122.015	Multipoint lock - G-U Secury MR2 (45) -122.015		1	
Brava G-U za pom. krilo (lijeva) 122.025	Lever-operated gear for passive leaf G-U (left) 122.025		1	
Gornji element za nastavljanje 122.026	Top shoot bolt unit 122.026		1	
Donji element za nastavljanje 122.027	Bottom shoot bolt unit 122.027		1	
Prihvatna pločica gore 122.028	Top striking plate 122.028		1	
Podna čahura za Ø12 120.005	Brass floor socket (inside hole Ø12) 120.005		1	
Trodijelna cilindrična šarka 112.012.01 - bijela	Barrel door hinge-3 part 112.012.01 - bijela	2 ili (3) po krilu ovisno o visini i tež.krila 2 or (3) per sash(dep. of height and weight of sash)		
Ručka za vrata 102.028	Door handle 102.028		2	
Četvrtka 102.025	Square spindle 102.025		1	
Cilindar (35-75) 122.095	Cylinder (35-75) 122.095		1	
Štitnik cilindra 122.098	Cylinder rosette 122.098		2	
Protuprovalni umetak 141.002	Security pin 141.002		4	
Staklo 44 mm	Glass 44 mm	(Lkr.-194)x/Hkr.-(Hpr.+128)/	2	
Staklo 44 mm	Glass 44 mm	(Lkr.-194)x(Hpr.-207)	2	

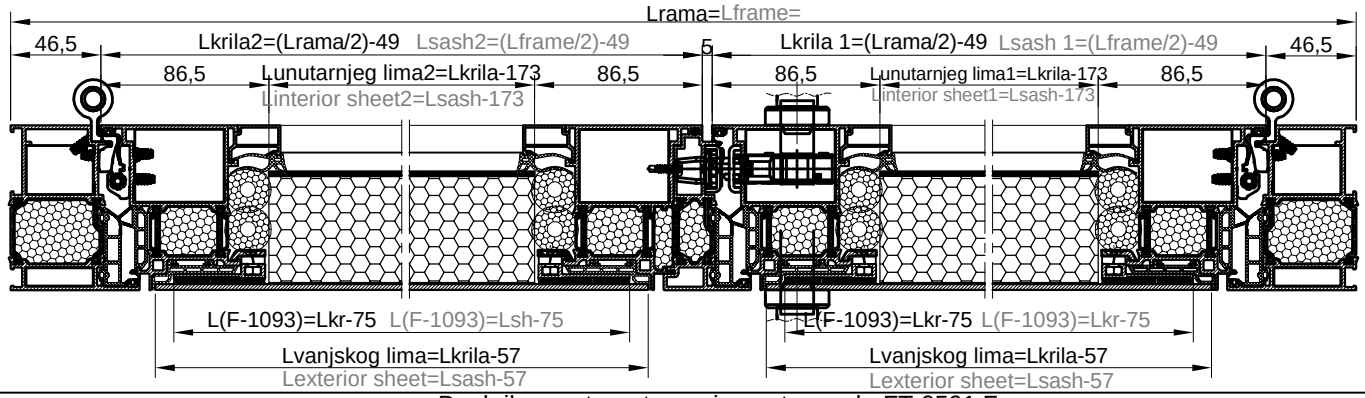


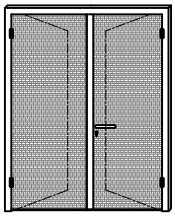




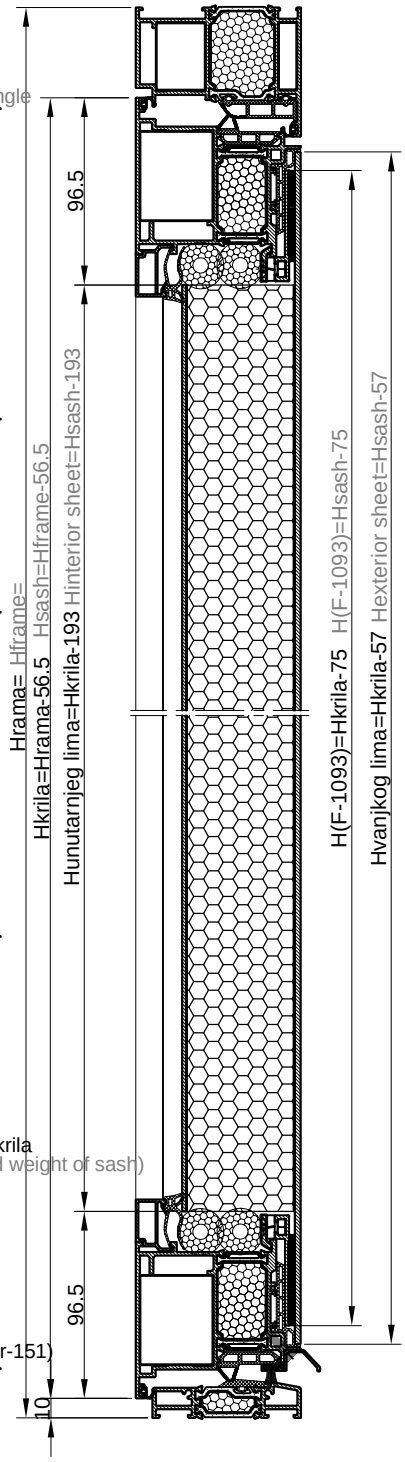
naziv name		mjera dimension	kom. pcs.	pilanje sawing angle
Ram FT-0551F	Frame FT-0551F	L	1	45-45
Ram FT-0551F	Frame FT-0551F	H	2	45-90
Krilo FT-0591F	Sash FT-0591F	(L/2)-49	4	45-45
Krilo FT-0591F	Sash FT-0591F	H-56.5	4	45-45
Prag FT-0584F	Threshold FT-0584F	L-164	1	90-90
Okapnica F-1200	Drip cap profile F-1200	Lkr-54	2	90-90
Staklo lajsna Z40-665	Glazing bead Z40-665	Lkr-141	4	90-90
Staklo lajsna Z40-665	Glazing bead Z40-665	Hkr-185	4	90-90
Umetak FT-0571F	Flying mullion FT-0571F	Hkr-57	1	90-90
Al profil F-1093	Al profile F-1093	Lkr-76	4	45-45
Al profil F-1093	Al profile F-1093	Hkr-76	4	45-45
Kutna spojnica 710.143	Corner bracket 710.143		2	
Kutna spojnica 710.141	Corner bracket 710.141		2	
Kutna spojnica 710.136	Corner bracket 710.136		8	
Kutna spojnica 710.015	Corner bracket 710.015		8	
Kutna spojnica 710.203	Corner bracket 710.203		8	
Kutna spojnica 730.001	Corner bracket 730.001		10	
Kopča 141.001	Panel clamp 141.001		(4Lkr+4Hkr)/250	
Centralna brtva rama 334.005	Central gasket-frame 334.005	1L+3H		
Centralna brtva krila 334.006	Central gasket-sash 334.006	4Lkr+3Hkr		
Brtva na spoju rama i krila 321.006	Rebate gasket 321.006	1L+2H+4Lkr+4Hkr		
Brtva 344.004	Gasket 344.004	4(Lkr-53)+4(Hkr-53)		
Brtva prema panelu unut. 311.005	Panel gasket-internal 311.005	4Lkr+4Hkr		
Brtva praga 331.013	Threshold gasket 331.013	L-164	1	90-90
Četkica 7x9 347.003	Brush seal 7x9 347.003	Lkr-35	1	90-90
Četkica 7x9 347.003	Brush seal 7x9 347.003	Lkr-2	1	90-90
Čep okapnice F-1200 373.027	End cap for F-1200 373.027		2 para	
Umetak na pragu 373.019	End cap for threshold 373.019		1 par	
Čep kombatute 363.014	End cap for flying mullion 363.014		1 par	
Brava G-U Secury s MR2 (35) tri ključanja 122.016	Multipoint lock - G-U Secury MR2 (35) -122.016		1	
Brava G-U za pom. krilo (lijeva) 122.025	Lever-operated gear for passive leaf G-U (left) 122.025		1	
Gornji element za nastavljanje 122.026	Top shoot bolt unit 122.026		1	
Donji element za nastavljanje 122.027	Bottom shoot bolt unit 122.027		1	
Prihvatna pločica gore 122.028	Top striking plate 122.028		1	
Prihvatna pločica dolje 122.080	Bottom striking plate 122.080		1	
Trodijelna cilindrična šarka 112.011.01 - bijela	Barrel door hinge-3 part 112.011.01 - white	2 ili (3) po krilu ovisno o visini i tež.krila 2 or (3) per sash(dep. of height and weight of sash)		
Ručka za vrata 102.028	Door handle 102.028		2	
Četvrtka 102.025	Square spindle 102.025		1	
Cilindar (35-75) 122.095	Cylinder (35-75) 122.095		1	
Štitnik cilindra 122.098	Cylinder rosette 122.098		2	
Protuprovalni umetak 141.002	Security pin 141.002		4	
Izolacijski umetak Ø25 340.035	Underpanel insulator Ø25 340.035		8(Lkr-173)+8(Hkr-131)	
Vanjski lim panela 3 mm	Exterior sheet 3 mm	(Lkr.-57)x(Hkr.-57)	2	
Unutarnji lim panela 2 mm	Interior sheet 2 mm	(Lkr.-173)x(Hkr.-173)	2	
Stirodur za panel (60 mm)	Stirodur for panel (60 mm)	(Lkr.-173)x(Hkr.-173)	2	

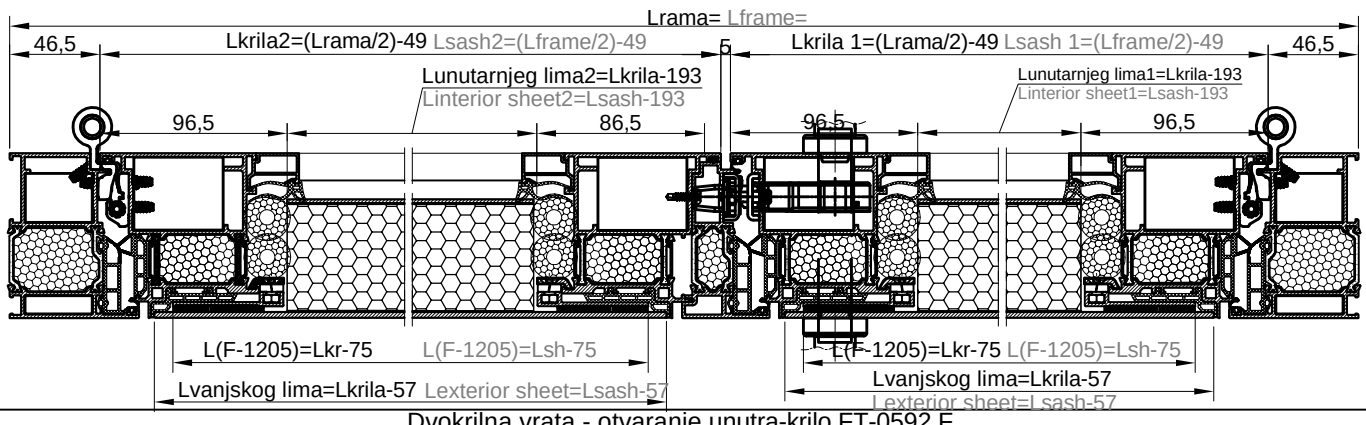


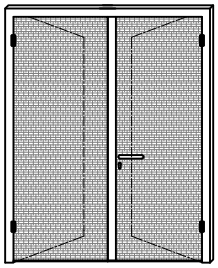




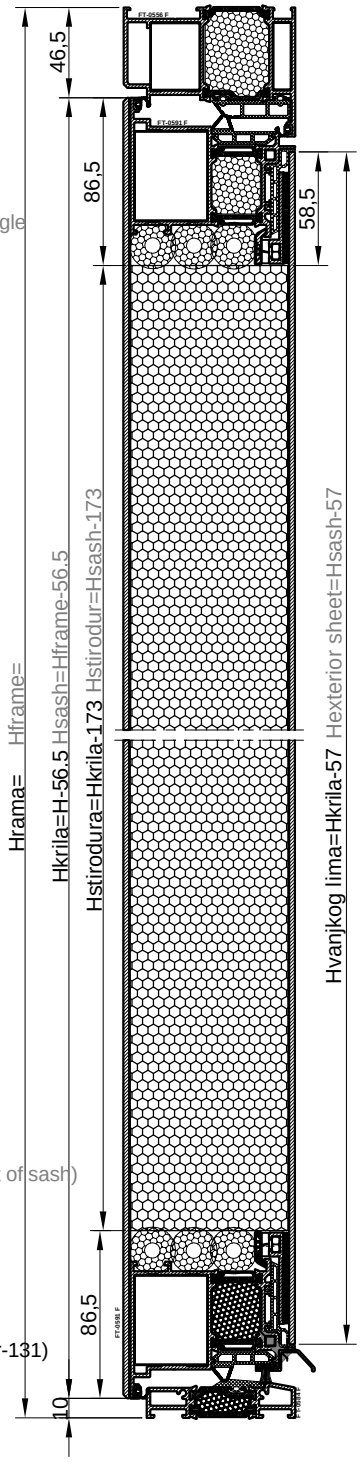
naziv name		mjera dimension	kom. pcs.	pilanje sawing angle
Ram FT-0551F	Frame FT-0551F	L	1	45-45
Ram FT-0551F	Frame FT-0551F	H	2	45-90
Krilo FT-0592F	Sash FT-0592F	(L/2)-49	4	45-45
Krilo FT-0592F	Sash FT-0592F	H-56.5	4	45-45
Prag FT-0584F	Threshold FT-0584F	L-164	1	90-90
Okapnica F-1200	Drip cap profile F-1200	Lkr-54	2	90-90
Staklo lajsna Z40-665	Glazing bead Z40-665	Lkr-161	4	90-90
Staklo lajsna Z40-665	Glazing bead Z40-665	Hkr-205	4	90-90
Umetak FT-0571F	Flying mullion FT-0571F	Hkr-57	1	90-90
Al profil F-1205	Al profile F-1205	Lkr-76	4	45-45
Al profil F-1205	Al profile F-1205	Hkr-76	4	45-45
Kutna spojnica 710.143	Corner bracket 710.143		2	
Kutna spojnica 710.141	Corner bracket 710.141		2	
Kutna spojnica 710.136	Corner bracket 710.136		8	
Kutna spojnica 710.015	Corner bracket 710.015		8	
Kutna spojnica 710.203	Corner bracket 710.203		8	
Kutna spojnica 730.001	Corner bracket 730.001		10	
Kopča 141.001	Panel clamp 141.001		(4Lkr+4Hkr)/250	
Centralna brtva rama 334.005	Central gasket-frame 334.005	1L+3H		
Centralna brtva krila 334.006	Central gasket-sash 334.006	4Lkr+3Hkr		
Brtva na spoju rama i krila 321.006	Rebate gasket 321.006	1L+2H+4Lkr+4Hkr		
Brtva 344.004	Gasket 344.004	4(Lkr-53)+4(Hkr-53)		
Brtva prema panelu unut. 311.005	Panel gasket-internal 311.005	4Lkr+4Hkr		
Brtva praga 331.013	Threshold gasket 331.013	L-164	1	
Četkica 7x9 347.003	Brush seal 7x9 347.003	Lkr-35	1	
Četkica 7x9 347.003	Brush seal 7x9 347.003	Lkr-2	1	
Čep okapnice F-1200 373.027	End cap for F-1200 373.027		2 para	
Umetak na pragu 373.019	End cap for threshold 373.019		1 par	
Čep kombatute 363.014	End cap for flying mullion 363.014		1 par	
Brava G-U Secury s MR2 (45) tri ključanja 122.015	Multipoint lock - G-U Secury MR2 (45) -122.015		1	
Brava G-U za pom. krilo (lijeva) 122.025	Lever-operated gear for passive leaf G-U (left) 122.025		1	
Gornji element za nastavljanje 122.026	Top shoot bolt unit 122.026		1	
Donji element za nastavljanje 122.027	Bottom shoot bolt unit 122.027		1	
Prihvatna pločica gore 122.028	Top striking plate 122.028		1	
Prihvatna pločica dolje 122.080	Bottom striking plate 122.080		1	
Trodijelna cilindrična šarka 112.011.01 - bijela	Barrel door hinge-3 part 112.011.01 - white	2 ili (3) po krilu ovisno o visini i tež.krila 2 or (3) per sash(dep. of height and weight of sash)		
Ručka za vrata 102.028	Door handle 102.028		2	
Četvrtka 102.025	Square spindle 102.025		1	
Cilindar (35-75) 122.095	Cylinder (35-75) 122.095		1	
Štitnik cilindra 122.098	Cylinder rosette 122.098		2	
Protuprovalni umetak 141.002	Security pin 141.002		4	
Izolacijski umetak Ø25 340.035	Underpanel insulator Ø25 340.035		8(Lkr-192)+8(Hkr-151)	
Vanjski lim panela 3 mm	Exterior sheet 3 mm	(Lkr.-57)x(Hkr.-57)	2	
Unutarnji lim panela 2 mm	Interior sheet 2 mm	(Lkr.-193)x(Hkr.-193)	2	
Stirodur za panel (60 mm)	Stirodur for panel (60 mm)	(Lkr.-193)x(Hkr.-193)	2	

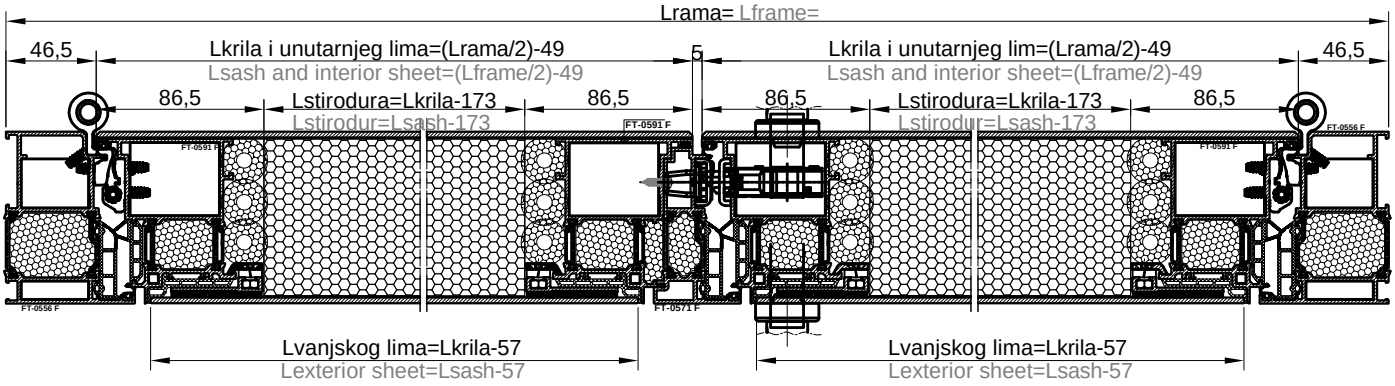


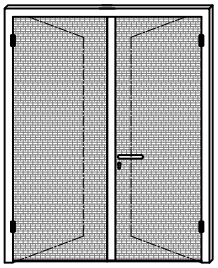




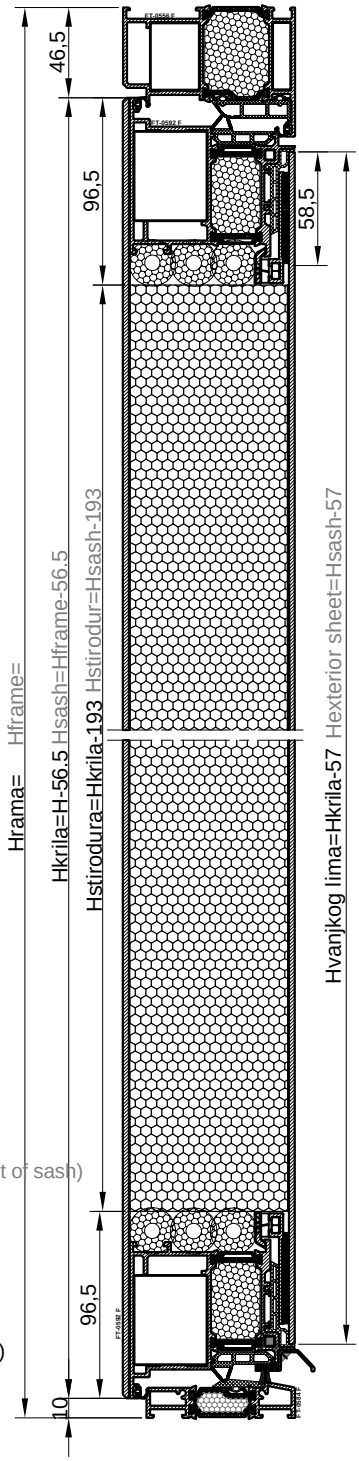
naziv name		mjera dimension	kom. pcs.	pilanje sawing angle
Ram FT-0556F	Frame FT-0556F	L	1	45-45
Ram FT-0556F	Frame FT-0556F	H	2	45-90
Krilo FT-0591F	Sash FT-0591F	(L/2)-49	4	45-45
Krilo FT-0591F	Sash FT-0591F	H-56.5	4	45-45
Umetak FT-0571F	Flying mullion FT-0571F	Hkr-57	1	90-90
Prag FT-0584F	Threshold FT-0584F	L-164	1	90-90
Okapnica F-1200	Drip cap profile F-1200	Lkr-54	2	90-90
Al profil F-1093	Al profile F-1093	Lkr-76	4	45-45
Al profil F-1093	Al profile F-1093	Hkr-76	4	45-45
Kutna spojnica 710.143	Corner bracket 710.143		2	
Kutna spojnica 710.141	Corner bracket 710.141		2	
Kutna spojnica 710.136	Corner bracket 710.136		8	
Kutna spojnica 710.015	Corner bracket 710.015		8	
Kutna spojnica 710.203	Corner bracket 710.203		8	
Kutna spojnica 730.001	Corner bracket 730.001		10	
Kopča 141.001	Panel clamp 141.001		(4Lkr+4Hkr)/250	
Centralna brtva rama 334.005	Central gasket-frame 334.005	2Lkr+3Hkr		
Centralna brtva krila 334.006	Central gasket-sash 334.006	4Lkr+3Hkr		
Brtva na spoju rama i krila 321.006	Rebate gasket 321.006	6Lkr+6Hkr		
Brtva 344.004	Gasket 344.004	4(Lkr-53)+4(Hkr-53)		
Brtva praga 331.013	Threshold gasket 331.013	L-164	1	90-90
Četkica 7x9 347.003	Brush seal 7x9 347.003	Lkr-35	2	90-90
Čep okapnice F-1200 373.027	End cap for F-1200 373.027		2 par	
Umetak na pragu 373.019	End cap for threshold 373.019		1 par	
Brava G-U Secury s MR2 (35) tri ključanja 122.016	Multipoint lock - G-U Secury MR2 (35) -122.016		1	
Brava G-U za pom. krilo (lijeva) 122.025	Lever-operated gear for passive leaf G-U (left) 122.025		1	
Gornji element za nastavljanje 122.026	Top shoot bolt unit 122.026		1	
Donji element za nastavljanje 122.027	Bottom shoot bolt unit 122.027		1	
Prihvatna pločica gore 122.028	Top striking plate 122.028		1	
Prihvatna pločica dolje 122.080	Bottom striking plate 122.080		1	
Trodijelna cilindrična šarka 112.011.01 - bijela	Barrel door hinge-3 part 112.011.01 - white	2 ili (3) po krilu ovisno o visini i tež.krila 2 or (3) per sash(dep. of height and weight of sash)		
Ručka za vrata 102.028	Door handle 102.028		2	
Četvrtka 102.025	Square spindle 102.025		1	
Cilindar (35-75) 122.095	Cylinder (35-75) 122.095		1	
Štitnik cilindra 122.098	Cylinder rosette 122.098		2	
Protuprovalni umetak 141.002	Security pin 141.002		4	
Izolacijski umetak Ø25 340.035	Underpanel insulator Ø25 340.035		12(Lkr-173)+12(Hkr-131)	
Vanjski lim panela 3 mm	Exterior sheet 3 mm	(Lkr.-57)x(Hkr.-57)	2	
Unutarnji lim panela 3 mm	Interior sheet 3 mm	LkrxHkr	2	
Stirodur (ispuna panela 81.4 mm)	Stirodu (panel 81.4 mm)	(Lkrila-173)x(Hkrila-173) (Lkrila-173)x(Hkrila-173)	2	

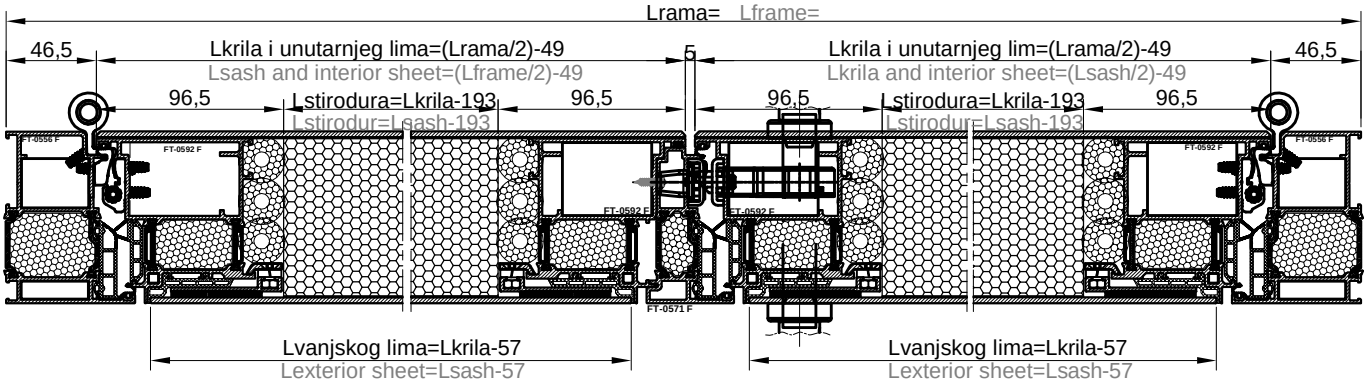


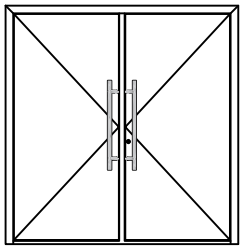




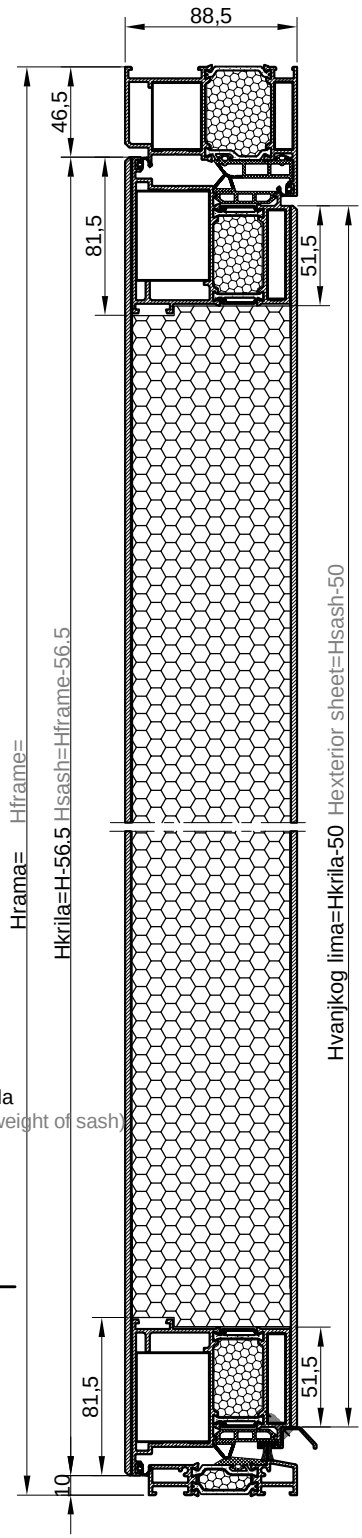
naziv name		mjera dimension	kom. pcs.	pilanje sawing angle
Ram FT-0556F	Frame FT-0556F	L	1	45-45
Ram FT-0556F	Frame FT-0556F	H	2	45-90
Krilo FT-0592F	Sash FT-0592F	(L/2)-49	4	45-45
Krilo FT-0592F	Sash FT-0592F	H-56.5	4	45-45
Umetak FT-0571F	Flying mullion FT-0571F	Hkr-57	1	90-90
Prag FT-0584F	Threshold FT-0584F	L-164	1	90-90
Okapnica F-1200	Drip cap profile F-1200	Lkr-54	2	90-90
Al profil F-1205	Al profile F-1205	Lkr-76	4	45-45
Al profil F-1205	Al profile F-1205	Hkr-76	4	45-45
Kutna spojnica 710.143	Corner bracket 710.143		2	
Kutna spojnica 710.141	Corner bracket 710.141		2	
Kutna spojnica 710.136	Corner bracket 710.136		8	
Kutna spojnica 710.015	Corner bracket 710.015		8	
Kutna spojnica 710.203	Corner bracket 710.203		8	
Kutna spojnica 730.001	Corner bracket 730.001		10	
Kopča 141.001	Panel clamp 141.001		(4Lkr+4Hkr)/250	
Centralna brtva rama 334.005	Central gasket-frame 334.005	2Lkr+3Hkr		
Centralna brtva krila 334.006	Central gasket-sash 334.006	4Lkr+3Hkr		
Brtva na spoju rama i krila 321.006	Rebate gasket 321.006	6Lkr+6Hkr		
Brtva 344.004	Gasket 344.004	4(Lkr-53)+4(Hkr-53)		
Brtva praga 331.013	Threshold gasket 331.013	L-164	1	90-90
Četkica 7x9 347.003	Brush seal 7x9 347.003	Lkr-35	2	90-90
Čep okapnice F-1200 373.027	End cap forF-1200 373.027		1 par	
Umetak na pragu 373.019	End cap for threshold 373.019		1 par	
Brava G-U Secury s MR2 (45) tri ključanja 122.015	Multipoint lock - G-U Secury MR2 (45) -122.015		1	
Brava G-U za pom. krilo (lijeva) 122.025	Lever-operated gear for passive leaf G-U (left) 122.025		1	
Gornji element za nastavljanje 122.026	Top shoot bolt unit 122.026		1	
Donji element za nastavljanje 122.027	Bottom shoot bolt unit 122.027		1	
Prihvatna pločica gore 122.028	Top striking plate 122.028		1	
Prihvatna pločica dolje 122.080	Bottom striking plate 122.080		1	
Trodijelna cilindrična šarka 112.011.01 - bijela	Barrel door hinge-3 part 112.011.01 - white	2 ili (3) po krilu ovisno o visini i tež.krila 2 or (3) per sash(dep. of height and weight of sash)		
Ručka za vrata 102.028	Door handle 102.028		2	
Četvrtka 102.025	Square spindle 102.025		1	
Cilindar (35-75) 122.095	Cylinder (35-75) 122.095		1	
Štitnik cilindra 122.098	Cylinder rosette 122.098		2	
Protuprovalni umetak 141.002	Security pin 141.002		4	
Izolacijski umetak Ø25 340.035	Underpanel insulator Ø25 340.035		12(Lkr-193)+12(Hkr-151)	
Vanjski lim panela 3 mm	Exterior sheet 3 mm	(Lkr.-57)x(Hkr.-57)	2	
Unutarnji lim panela 3 mm	Interior sheet 3 mm	LkrxHkr	2	
Stirodur (ispuna panela 81.4 mm)	Stirodur (panel 81.4 mm)	(Lkrila-193)x(Hkrila-193) (Lsash-193)x(Hsash193)	2	

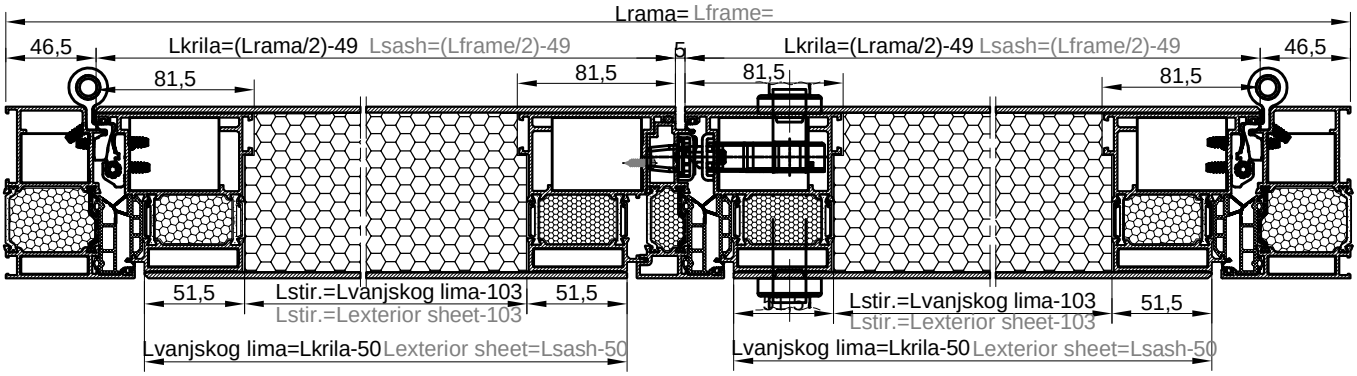


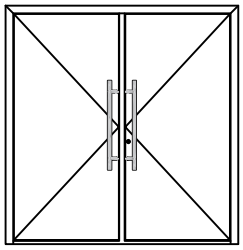




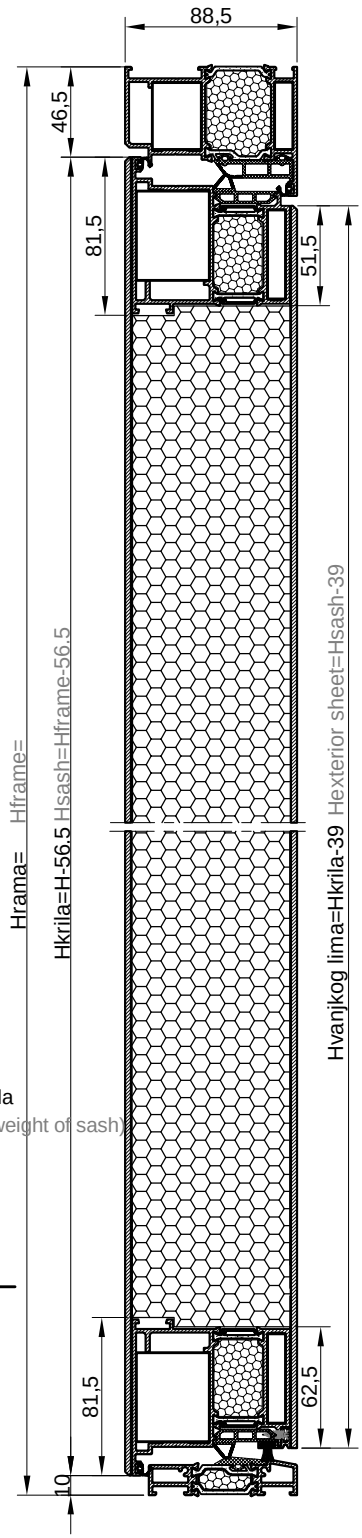
naziv name		mjera dimension	kom. pcs.	pilanje sawing angle
Ram FT-0556F	Frame FT-0556F	L	1	45-45
Ram FT-0556F	Frame FT-0556F	H	2	45-90
Krilo FT-0593F	Sash FT-0593F	(L/2)-49	4	45-45
Krilo FT-0593F	Sash FT-0593F	H-56.5	4	45-45
Prag FT-0584F	Threshold FT-0584F	L-164	1	90-90
Umetak FT-0571F	Flying mullion FT-0571F	Hkr-57	1	90-90
Okapnica F-1200	Drip cap profile F-1200	Lkr-54	2	90-90
Kutna spojnica 710.143	Corner bracket 710.143		2	
Kutna spojnica 710.141	Corner bracket 710.141		2	
Kutna spojnica 710.136	Corner bracket 710.136		8	
Kutna spojnica 710.169	Corner bracket 710.169		8	
Kutna spojnica 730.001	Corner bracket 730.001		10	
Centralna brtva rama 334.005	Central gasket-frame 334.005	1L+3H		
Centralna brtva krila 334.006	Central gasket-sash 334.006	4Lkr+3Hkr		
Brtva na spoju rama i krila 321.006	Rebate gasket 321.006	1L+2H+4Lkr+4Hkr		
Brtva praga 331.013	Threshold gasket 331.013	L-164	2	90-90
Četkica 7x9 347.003	Brush seal 7x9 347.003	Lkr-35	2	90-90
Čep okapnice F-1200 373.027	End cap for F-1200 373.027		2 par	
Umetak na pragu 373.019	End cap for threshold 373.019		1 par	
Čep kombatute 363.014	End cap for flying mullion 363.014		1 par	
Brava G-U Secury s MR2 (45) tri ključanja 122.015	Multipoint lock - G-U Secury MR2 (45) -122.015		1	
Brava G-U za pom. krilo (lijeva) 122.025	Lever-operated gear for passive leaf G-U (left) 122.025		1	
Gornji element za nastavljanje 122.026	Top shoot bolt unit 122.026		1	
Donji element za nastavljanje 122.027	Bottom shoot bolt unit 122.027		1	
Prihvatna pločica gore 122.028	Top striking plate 122.028		1	
Prihvatna pločica dolje 122.080	Bottom striking plate 122.080		1	
Trodijelna cilindrična šarka 112.011.01 - bijela	Barrel door hinge-3 part 112.011.01 - white	2 ili (3) po krilu ovisno o visini i tež.krila 2 or (3) per sash(dep. of height and weight of sash)		
Ručka za vrata 102.028	Door handle 102.028		2	
Četvrtka 102.025	Square spindle 102.025		1	
Cilindar (35-75) 122.095	Cylinder (35-75) 122.095		1	
Štitnik cilindra 122.098	Cylinder rosette 122.098		2	
Protuprovalni umetak 141.002	Security pin 141.002		4	
Vanjski lim panela 3 mm	Exterior sheet 3 mm	(Lkr.-50)x(Hkr.-50)	2	
Unutarnji lim panela 3 mm	Interior sheet 3 mm	LkrxHkr	2	
Stirodur (ispuna panela 81.4 mm)	Stirodur (panel 81.4 mm)	(Lvanj.lima-103)x(Hvanj.lima-103) (Lext.sheet-103)x(Hext.sheet-103)	2	

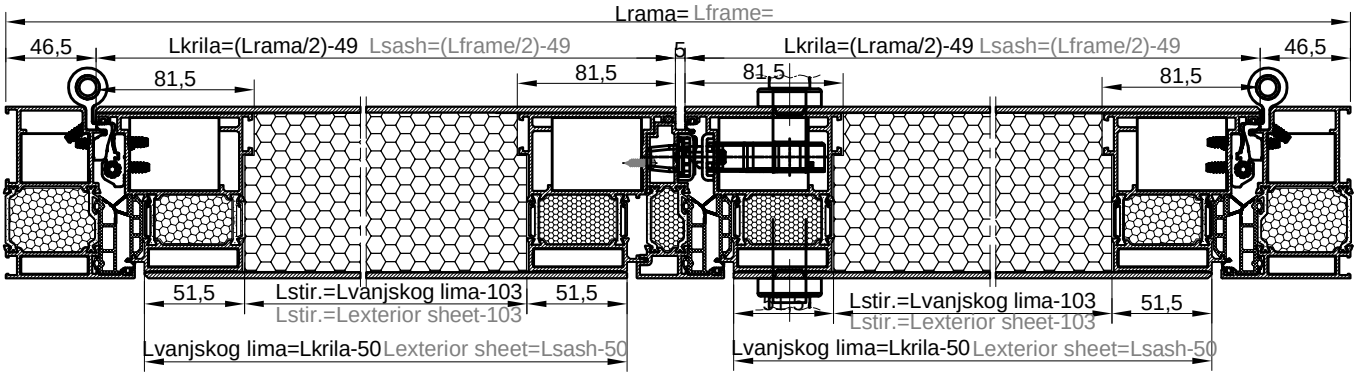


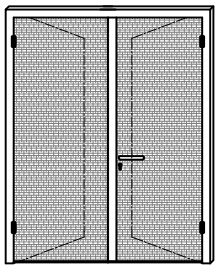




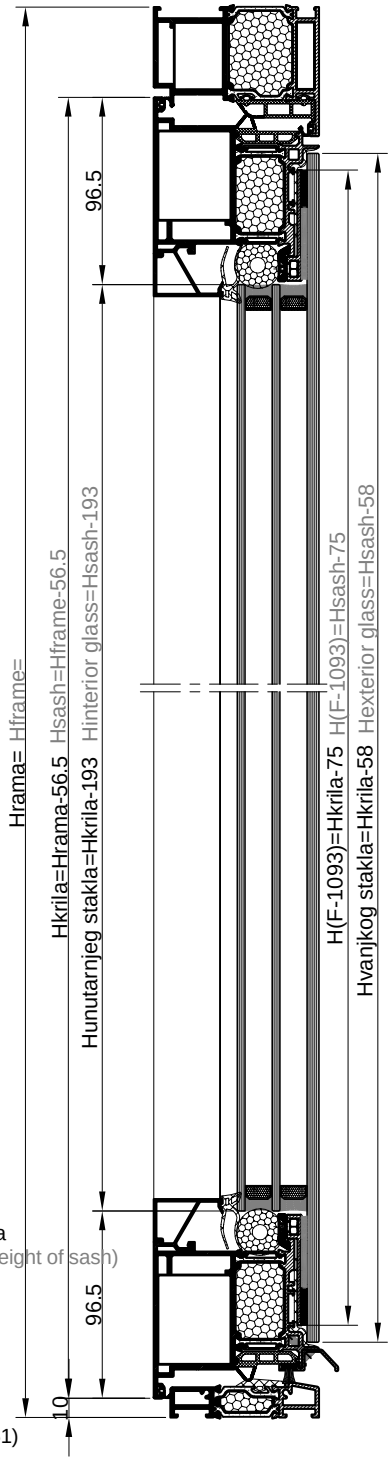
naziv name		mjera dimension	kom. pcs.	pilanje sawing angle
Ram FT-0556F	Frame FT-0556F	L	1	45-45
Ram FT-0556F	Frame FT-0556F	H	2	45-90
Krilo FT-0593F	Sash FT-0593F	(L/2)-49	4	45-45
Krilo FT-0593F	Sash FT-0593F	H-56.5	4	45-45
Prag FT-0584F	Threshold FT-0584F	L-164	1	90-90
Umetak FT-0571F	Flying mullion FT-0571F	Hkr-57	1	90-90
Okapnica F-1596	Drip cap profile F-1596	Lkr-54	2	90-90
Kutna spojnica 710.143	Corner bracket 710.143		2	
Kutna spojnica 710.141	Corner bracket 710.141		2	
Kutna spojnica 710.136	Corner bracket 710.136		8	
Kutna spojnica 710.169	Corner bracket 710.169		8	
Kutna spojnica 730.001	Corner bracket 730.001		10	
Centralna brtva rama 334.005	Central gasket-frame 334.005	1L+3H		
Centralna brtva krila 334.006	Central gasket-sash 334.006	4Lkr+3Hkr		
Brtva na spoju rama i krila 321.006	Rebate gasket 321.006	1L+2H+4Lkr+4Hkr		
Brtva praga 331.013	Threshold gasket 331.013	L-164	2	90-90
Četkica 7x9 347.003	Brush seal 7x9 347.003	Lkr-35	2	90-90
Čep okapnice F-1596 373.057	End cap for F-1596 373.057		2 par	
Umetak na pragu 373.019	End cap for threshold 373.019		1 par	
Čep kombatute 363.014	End cap for flying mullion 363.014		1 par	
Brava G-U Secury s MR2 (45) tri ključanja 122.015	Multipoint lock - G-U Secury MR2 (45) -122.015		1	
Brava G-U za pom. krilo (lijeva) 122.025	Lever-operated gear for passive leaf G-U (left) 122.025		1	
Gornji element za nastavljanje 122.026	Top shoot bolt unit 122.026		1	
Donji element za nastavljanje 122.027	Bottom shoot bolt unit 122.027		1	
Prihvatna pločica gore 122.028	Top striking plate 122.028		1	
Prihvatna pločica dolje 122.080	Bottom striking plate 122.080		1	
Trodijelna cilindrična šarka 112.011.01 - bijela	Barrel door hinge-3 part 112.011.01 - white	2 ili (3) po krilu ovisno o visini i tež.krila 2 or (3) per sash(dep. of height and weight of sash)		
Ručka za vrata 102.028	Door handle 102.028		2	
Četvrtka 102.025	Square spindle 102.025		1	
Cilindar (35-75) 122.095	Cylinder (35-75) 122.095		1	
Štitnik cilindra 122.098	Cylinder rosette 122.098		2	
Protuprovalni umetak 141.002	Security pin 141.002		4	
Vanjski lim panela 3 mm	Exterior sheet 3 mm	(Lkr.-50)x(Hkr.-39)	2	
Unutarnji lim panela 3 mm	Interior sheet 3 mm	LkrxHkr	2	
Stirodur (ispuna panela 81.4 mm)	Stirodur (panel 81.4 mm)	(Lvanj.lima-103)x(Hvanj.lima-114) (Lext.sheet-103)x(Hint.sheet-114)	2	

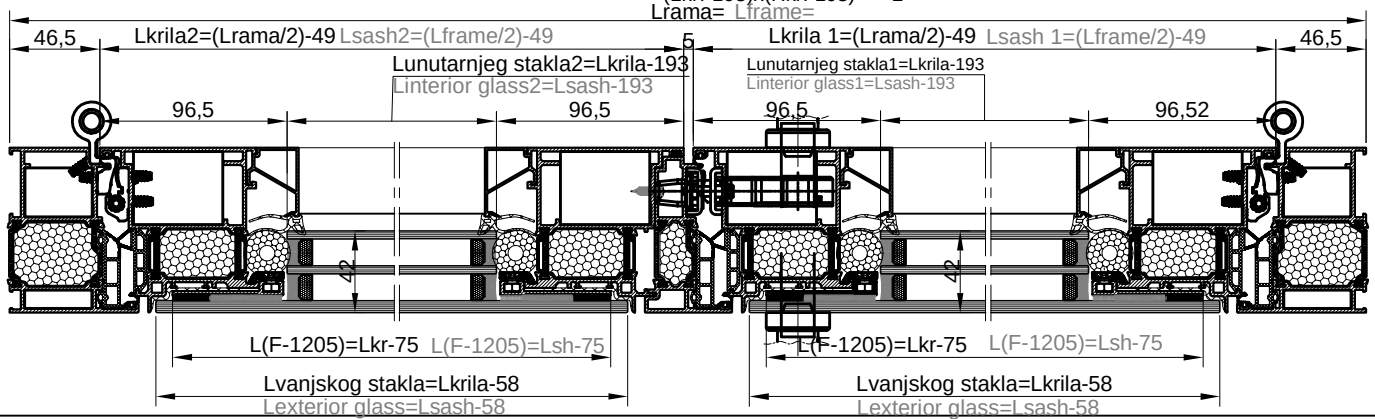




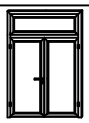


naziv name		mjera dimension	kom. pcs.	pilanje sawing angle
Ram FT-0551F	Frame FT-0551F	L	1	45-45
Ram FT-0551F	Frame FT-0551F	H	2	45-90
Krilo FT-0592F	Sash FT-0592F	(L/2)-49	4	45-45
Krilo FT-0592F	Sash FT-0592F	H-56.5	4	45-45
Prag FT-0584F	Threshold FT-0584F	L-164	1	90-90
Okapnica F-1200	Drip cap profile F-1200	Lkr-54	2	90-90
Staklo lajsna Z40-669	Glazing bead Z40-669	Lkr-161	4	90-90
Staklo lajsna Z40-669	Glazing bead Z40-669	Hkr-205	4	90-90
Umetak FT-0571F	Flying mullion FT-0571F	Hkr-57	1	90-90
Al profil F-1205	Al profile F-1205	Lkr-75	4	45-45
Al profil F-1205	Al profile F-1205	Hkr-75	4	45-45
Kutna spojnica 710.143	Corner bracket 710.143		2	
Kutna spojnica 710.141	Corner bracket 710.141		2	
Kutna spojnica 710.136	Corner bracket 710.136		8	
Kutna spojnica 710.015	Corner bracket 710.015		8	
Kutna spojnica 710.203	Corner bracket 710.203		8	
Kutna spojnica 730.001	Corner bracket 730.001		10	
Kopča 141.001	Panel clamp 141.001		(4Lkr+4Hkr)/250	
Centralna brtva rama 334.005	Central gasket-frame 334.005	1L+3H		
Centralna brtva krila 334.006	Central gasket-sash 334.006	4Lkr+3Hkr		
Brtva na spoju rama i krila 321.006	Rebate gasket 321.006	1L+2H+4Lkr+5Hkr		
Brtva 344.003	Gasket 344.003	4(Lkr-53)+4(Hkr-53)		
Brtva prema staklu unutarnja 311.005	Glazing gasket -internal- 311.005	4Lkr+4Hkr		
Brtva praga 331.013	Threshold gasket 331.013	L-164	1	90-90
Četkica 7x9 347.003	Brush seal 7x9 347.003	Lkr-35	1	90-90
Četkica 7x9 347.003	Brush seal 7x9 347.003	Lkr-2	1	90-90
Čep okapnice F-1200 373.027	End cap for F-1200 373.027		2 para	
Umetak na pragu 373.019	End cap for threshold 373.019		1 par	
Čep kombatute 363.014	End cap for flying mullion 363.014		1 par	
Brava G-U Secury s MR2 (45) tri ključanja 122.015	Multipoint lock - G-U Secury MR2 (45) -122.015		1	
Brava G-U za pom. krilo (lijeva) 122.025	Lever-operated gear for passive leaf G-U (left) 122.025		1	
Gornji element za nastavljanje 122.026	Top shoot bolt unit 122.026		1	
Donji element za nastavljanje 122.027	Bottom shoot bolt unit 122.027		1	
Prihvatna pločica gore 122.028	Top striking plate 122.028		1	
Prihvatna pločica dolje 122.080	Bottom striking plate 122.080		1	
Trodijelna cilindrična šarka 112.011.01 - bijela	Barrel door hinge-3 part 112.011.01 - white	2 ili (3) po krilu ovisno o visini i tež.krila 2 or (3) per sash(dep. of height and weight of sash)		
Ručka za vrata 102.028	Door handle 102.028		2	
Četvrtka 102.025	Square spindle 102.025		1	
Cilindar (35-75) 122.095	Cylinder (35-75) 122.095		1	
Štitnik cilindra 122.098	Cylinder rosette 122.098		2	
Protuprovalni umetak 141.002	Security pin 141.002		4	
Izolacijski umetak Ø25 340.035	Underglass insulator Ø25 340.035		4(Lkr-192)+4(Hkr-151)	
Vanjsko staklo	Exterior glass	(Lkr.-58)x(Hkr.-58)	2	
Unutarnje staklo	Interior glass	(Lkr.-193)x(Hkr.-193)	2	

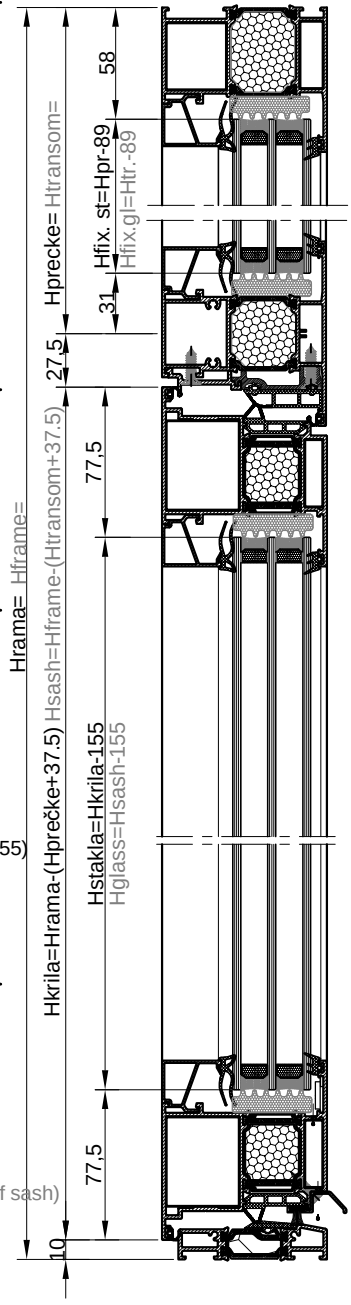


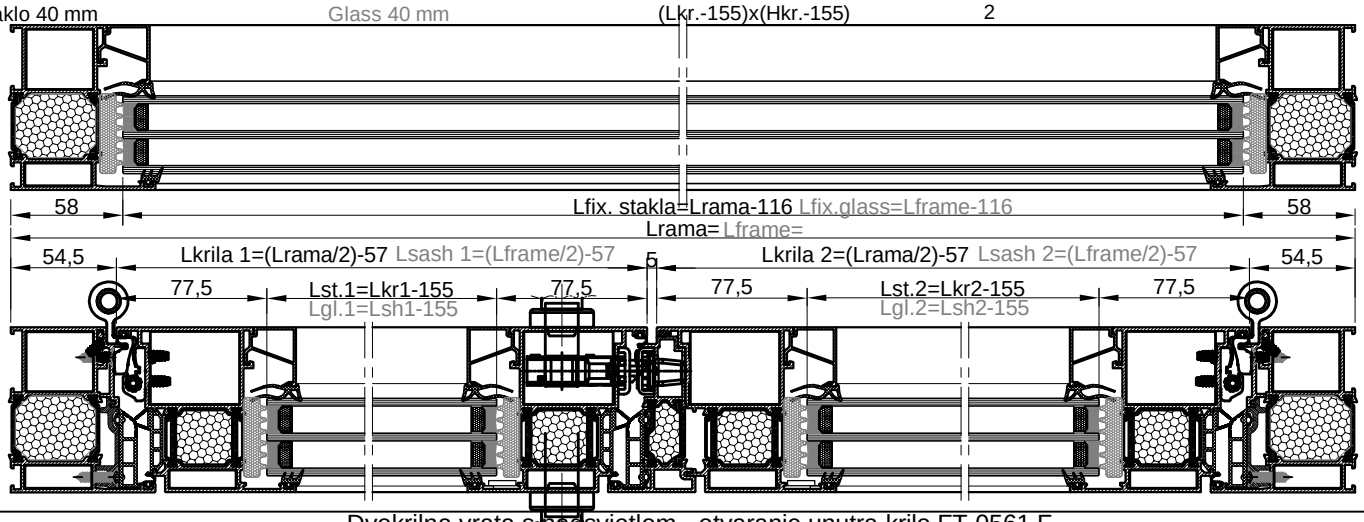


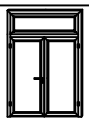
Dvokrilna vrata s nadsvjetlom
Double-leaf door with top light



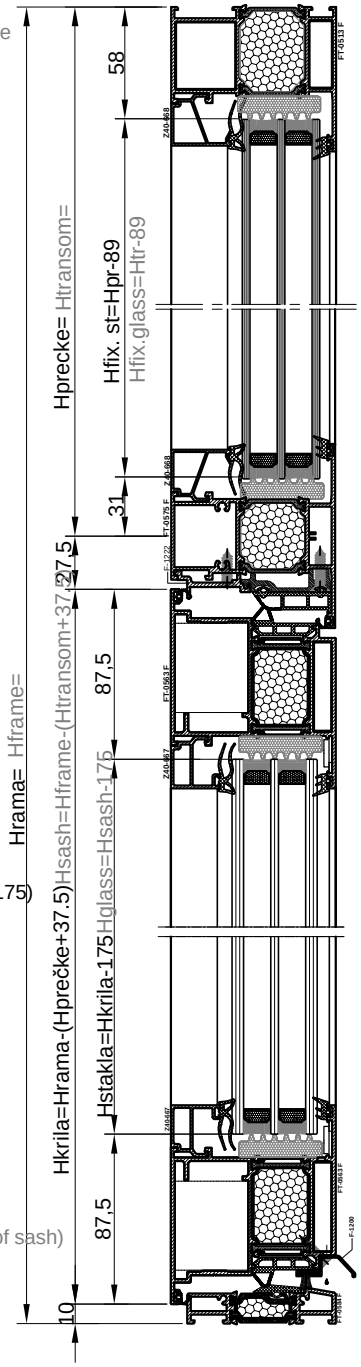
naziv name		mjera dimension	kom. pcs.	pilanje sawing angle
Ram FT-0513F	Frame FT-0513F	L	1	45-45
Ram FT-0513F	Frame FT-0513F	H	2	45-90
Krilo FT-0561F	Sash FT-0561F	(L/2)-57	4	45-45
Krilo FT-0561F	Sash FT-0561F	H-(Hpr+37.5)	4	45-45
Prag FT-0584F	Threshold FT-0584F	L-180	1	90-90
Okapnica F-1200	Drip cap profile F-1200	Lkr-54	2	90-90
Staklo lajsna Z40-668	Glazing bead Z40-668	L-99	2	90-90
Staklo lajsna Z40-668	Glazing bead Z40-668	Lkr-141	4	90-90
Staklo lajsna Z40-668	Glazing bead Z40-668	Hpr.-116	2	90-90
Staklo lajsna Z40-668	Glazing bead Z40-668	H-(Hpr.+222.5)	4	90-90
Prečka FT-0575F	Transom FT-0575F	L-87.5	1	90-90
Umetak rama F-1222	Additional profile F-1222	L-89.1	1	45-45
Umetak rama F-1222	Additional profile F-1222	H-(Hpr+17.7)	2	45-90
Profil kombatute FT-0571F	Flying mullion FT-0571F	Hkr-57	1	90-90
Kutna spojnica 710.145	Corner bracket 710.145		2	
Kutna spojnica 710.141	Corner bracket 710.141		8	
Kutna spojnica 710.136	Corner bracket 710.136		8	
Kutna spojnica 731.010	Corner bracket 731.010		8	
Kutna spojnica 710.091	Corner bracket 710.091		2	
Veznik prečke 710.066	T bracket 710.066		4	
Veznik prečke 710.079	T bracket 710.079		4	
Kutna spojnica 730.001	Corner bracket 730.001		18	
Centralna brtva rama 334.005	Central gasket-frame 334.005	1L+3H		
Centralna brtva krila 334.006	Central gasket-sash 334.006	4Lkr+3Hkr		
Brtva 321.006	Rebate gasket 321.006	1L+4Lkr+6Hkr		
Brtva prema staklu vanjska 321.003	Glazing gasket -external- 321.003	2L+2Hpr+4Lkr+4Hkr		
Brtva prema staklu unutarnja 311.004	Glazing gasket -internal- 311.004	2L+2Hpr+4Lkr+4Hkr		
Brtva praga 331.013	Threshold gasket 331.013	L-180	1	90-90
Četkica 7x9 347.003	Brush seal 7x9 347.003	Lkr-35	1	90-90
Četkica 7x9 347.003	Brush seal 7x9 347.003	Lkr-2	1	90-90
Izolacijski umetak 340.013	Underglass insulator 340.013	2(L-91.5)+2(Hpr-89)+4(Lkr-131)+4(Hkr-155)		
Čep okapnice F-1200 373.027	End cap for F-1200 373.027		2 para	
Umetak na pragu 373.019	End cap for threshold 373.019		1 par	
Umetak na ramu 374.043	Additional pvc profile 374.043	L-88	1	45-45
Umetak na ramu 374.043	Additional pvc profile 374.043	H-(Hpr+17)	2	45-90
Čep kombatute 363.014	End cap for flying mullion 363.014		1 par	
Brava G-U Secury s MR2 (35) tri ključanja 122.016	Multipoint lock - G-U Secury MR2 (35) -122.016		1	
Brava G-U za pom. krilo (desna) 122.082	Lever-operated gear for passive leaf G-U (right) 122.082		1	
Gornji element za nastavljanje 122.026	Top shoot bolt unit 122.026		1	
Donji element za nastavljanje 122.027	Bottom shoot bolt unit 122.027		1	
Gornja prihvatna pločica 122.028	Top striking plate 122.028		1	
Donja prihvatna pločica 122.080	Bottom striking plate 122.080		1	
Trodijelna cilindrična šarka 112.011.01 - bijela	Barrel door hinge-3 part 112.011.01 - white	2 ili (3) po krilu ovisno o visini i tež.krila 2 or (3) per sash(dep. of height and weight of sash)		
Ručka za vrata 102.028	Door handle 102.028		2	
Četvrtka 102.025	Square spindle 102.025		1	
Cilindar (35-75) 122.095	Cylinder (35-75) 122.095		1	
Štitnik cilindra 122.098	Cylinder rosette 122.098		2	
Protuprovalni umetak 141.002	Security pin 141.002		4	
Staklo 40 mm	Glass 40 mm	(L-116)x(Hpr.-89)	1	
Staklo 40 mm	Glass 40 mm	(Lkr.-155)x(Hkr.-155)	2	

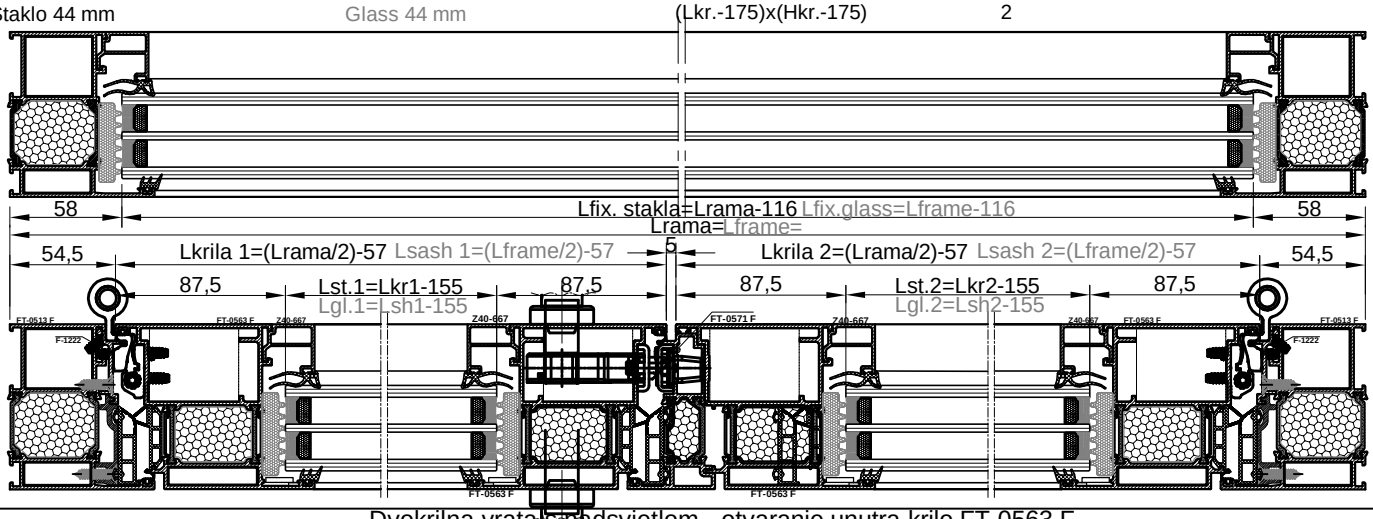


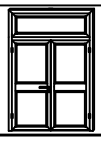




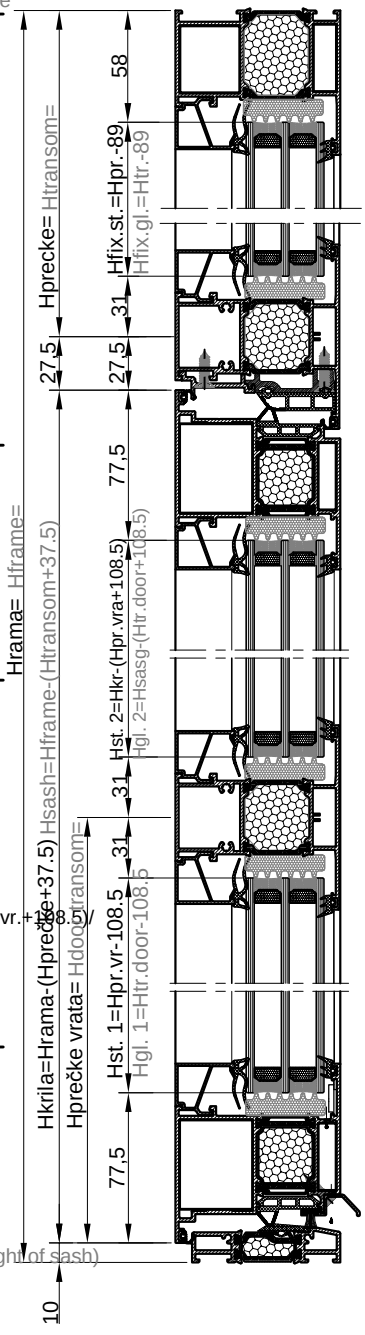
naziv name		mjera dimension	kom. pcs.	pilanje sawing angle
Ram FT-0513F	Frame FT-0513F	L	1	45-45
Ram FT-0513F	Frame FT-0513F	H	2	45-90
Krilo FT-0563F	Sash FT-0563F	(L/2)-57	4	45-45
Krilo FT-0563F	Sash FT-0563F	H-(Hpr+37.5)	4	45-45
Prag FT-0584F	Threshold FT-0584F	L-180	1	90-90
Okapnica F-1200	Drip cap profile F-1200	Lkr-54	2	90-90
Staklo lajsna Z40-667	Glazing bead Z40-667	L-99	2	90-90
Staklo lajsna Z40-667	Glazing bead Z40-667	Lkr-161	4	90-90
Staklo lajsna Z40-667	Glazing bead Z40-667	Hpr.-116	2	90-90
Staklo lajsna Z40-667	Glazing bead Z40-667	H-(Hpr.+242.5)	4	90-90
Prečka FT-0575F	Transom FT-0575F	L-87.5	1	90-90
Umetak rama F-1222	Additional profile F-1222	L-89	1	45-45
Umetak rama F-1222	Additional profile F-1222	H-(Hpr+17.7)	2	45-90
Profil kombatute FT-0571F	Flying mullion FT-0571F	Hkr-57	1	90-90
Kutna spojnica 710.145	Corner bracket 710.145		2	
Kutna spojnica 710.169	Corner bracket 710.141		8	
Kutna spojnica 710.136	Corner bracket 710.136		8	
Kutna spojnica 731.010	Corner bracket 731.010		8	
Kutna spojnica 710.091	Corner bracket 710.091		2	
Veznik prečke 710.066	T bracket 710.066		4	
Veznik prečke 710.079	T bracket 710.079		4	
Kutna spojnica 730.001	Corner bracket 730.001		18	
Centralna brtva rama 334.005	Central gasket-frame 334.005	1L+3H		
Centralna brtva krila 334.006	Central gasket-sash 334.006	4Lkr+3Hkr		
Brtva 321.006	Rebate gasket 321.006	1L+4Lkr+6Hkr		
Brtva prema staklu vanjska 321.003	Glazing gasket -external- 321.003	2L+2Hpr+4Lkr+4Hkr		
Brtva prema staklu unutarnja 311.004	Glazing gasket -internal- 311.004	2L+2Hpr+4Lkr+4Hkr		
Brtva praga 331.013	Threshold gasket 331.013	L-180	1	90-90
Četkica 7x9 347.003	Brush seal 7x9 347.003	Lkr-35	1	90-90
Četkica 7x9 347.003	Brush seal 7x9 347.003	Lkr-2	1	90-90
Izolacijski umetak 340.013	Underglass insulator 340.013	2(L-91.5)+2(Hpr-89)+4(Lkr-151)+4(Hkr-175)		
Čep okapnice F-1200 373.027	End cap for F-1200 373.027		2 para	
Umetak na pragu 373.019	End cap for threshold 373.019		1 par	
Umetak na ramu 374.043	Additional pvc profile 374.043	L-88	1	45-45
Umetak na ramu 374.043	Additional pvc profile 374.043	H-(Hpr+17)	2	45-90
Čep kombatute 363.014	End cap for flying mullion 363.014		1 par	
Brava G-U Secury s MR2 (45) tri ključanja 122.015	Multipoint lock - G-U Secury MR2 (45) -122.015		1	
Brava G-U za pom. krilo (desna) 122.082	Lever-operated gear for passive leaf G-U (right) 122.082		1	
Gornji element za nastavljanje 122.026	Top shoot bolt unit 122.026		1	
Donji element za nastavljanje 122.027	Bottom shoot bolt unit 122.027		1	
Gornja prihvatna pločica 122.028	Top striking plate 122.028		1	
Donja prihvatna pločica 122.080	Bottom striking plate 122.080		1	
Trodijelna cilindrična šarka 112.011.01 - bijela	Barrel door hinge-3 part 112.011.01 - white	2 ili (3) po krilu ovisno o visini i tež.krila 2 or (3) per sash(dep. of height and weight of sash)		
Ručka za vrata 102.028	Door handle 102.028		2	
Četvrtka 102.025	Square spindle 102.025		1	
Cilindar (35-75) 122.095	Cylinder (35-75) 122.095		1	
Štitnik cilindra 122.098	Cylinder rosettte 122.098		2	
Protuprovalni umetak 141.002	Security pin 141.002		4	
Staklo 44 mm	Glass 44 mm	(L-116)x(Hpr.-89)		1
Staklo 44 mm	Glass 44 mm	(Lkr.-175)x(Hkr.-175)		2

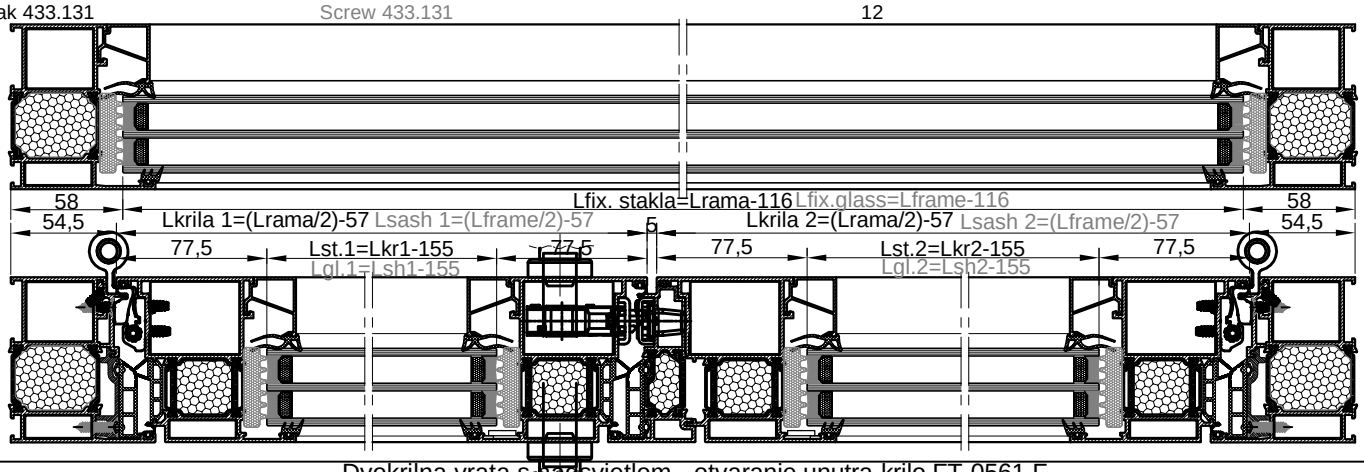






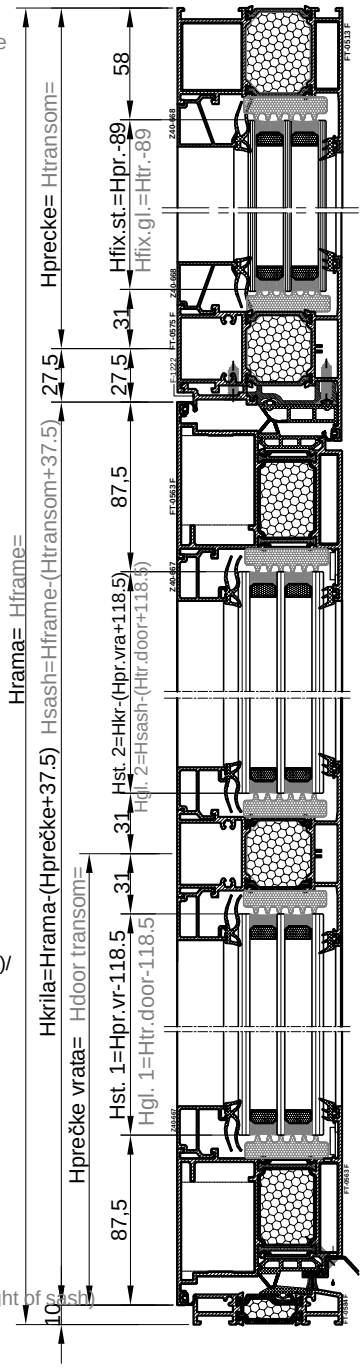
naziv name		mjera dimension	kom. pcs.	pilanje sawing angle
Ram FT-0513F	Frame FT-0513F	L	1	45-45
Ram FT-0513F	Frame FT-0513F	H	2	45-90
Krilo FT-0561F	Sash FT-0561F	(L/2)-57	4	45-45
Krilo FT-0561F	Sash FT-0561F	H-(Hpr+37.5)	4	45-45
Prag FT-0584F	Threshold FT-0584F	L-180	1	90-90
Okapnica F-1200	Drip cap profile F-1200	Lkr-54	2	90-90
Staklo lajsna Z40-668	Glazing bead Z40-668	L-99	2	90-90
Staklo lajsna Z40-668	Glazing bead Z40-668	Lkr-141	8	90-90
Staklo lajsna Z40-668	Glazing bead Z40-668	Hpr.-116	2	90-90
Staklo lajsna Z40-668	Glazing bead Z40-668	Hpr.vr.-137	4	90-90
Staklo lajsna Z40-668	Glazing bead Z40-668	H-(Hpr.+Hpr.vr.+174.5)	4	90-90
Prečka FT-0575F	Transom FT-0575F	L-87.5	1	90-90
Prečka na krilu FT-0575F	Transom-in sash FT-0575F	Lkr-128	2	90-90
Umetak rama F-1222	Additional profile F-1222	L-89	1	45-45
Umetak rama F-1222	Additional profile F-1222	H-(Hpr+17.7)	2	45-90
Profil kombatute FT-0571F	Flying mullion FT-0571F	Hkr-57	1	90-90
Kutna spojnica 710.145	Corner bracket 710.145		2	
Kutna spojnica 710.141	Corner bracket 710.141		8	
Kutna spojnica 710.136	Corner bracket 710.136		8	
Kutna spojnica 731.010	Corner bracket 731.010		8	
Kutna spojnica 710.091	Corner bracket 710.091		2	
Kutna spojnica 730.001	Corner bracket 730.001		18	
Veznik prečke 710.066	T bracket 710.066		12	
Veznik prečke 710.079	T bracket 710.079		4	
Veznik prečke 710.171	T bracket 710.171		8	
Centralna brtva rama 334.005	Central gasket-frame 334.005	1L+3Hkr		
Centralna brtva krila 334.006	Central gasket-sash 334.006	4Lkr+3Hkr		
Brtva na spoju rama i krila 321.006	Rebate gasket 321.006	1L+4Lkr+6Hkr		
Brtva prema staklu vanjska 321.003	Glazing gasket -external- 321.003	2L+8Lkr+2Hpr+4Hkr		
Brtva prema staklu unutarnja 311.004	Glazing gasket -internal- 311.004	2L+8Lkr+2Hpr+4Hkr		
Brtva praga 331.013	Threshold gasket 331.013	L-180	1	90-90
Četkica 7x9	Brush seal 7x9	Lkr-35	1	90-90
Četkica 7x9	Brush seal 7x9	Lkr-2	1	90-90
Izolacijski umetak 340.013	Underglass insulator 340.013	2(L-91.5)+2(Hpr.-89)		
Izolacijski umetak 340.013	Underglass insulator 340.013	8(Lkr.-131)+4(Hpr.vr.-108.5)+4/Hkr.-(Hpr.vr.+108.5)/		
Čep okapnice F-1200 373.027	End cap for F-1200 373.027		2 para	
Umetak na pragu 373.019	End cap for threshold 373.019		1 par	
Čep kombatute 363.014	End cap for flying mullion 363.014		1 par	
Umetak na ramu 374.043	Additional pvc profile 374.043	L-88	1	
Umetak na ramu 374.043	Additional pvc profile 374.043	H-(Hpr+17)	2	45-45
Brava G-U Secury s MR2 (35) tri ključanja 122.016	Multipoint lock - G-U Secury MR2 (35) -122.016		1	45-90
Brava G-U za pom. krilo (desna) 122.082	Lever-operated gear for passive leaf G-U (right) 122.082		1	
Gornji element za nastavljanje 122.026	Top shoot bolt unit 122.026		1	
Donji element za nastavljanje 122.027	Bottom shoot bolt unit 122.027		1	
Gornja prihvatna pločica 122.028	Top striking plate 122.028		1	
Donja prihvatna pločica 122.080	Bottom striking plate 122.080		1	
Trodijelna cilindrična šarka 112.011.01 - bijela	Barrel door hinge-3 part 112.011.01 - white	2 ili (3) po krilu ovisno o visini i tež.krila	2 or (3) per sash(dep. of height and weight of sash)	
Ručka za vrata 102.028	Door handle 102.028		2	
Četvrtka 102.025	Square spindle 102.025		1	
Cilindar (35-75) 122.095	Cylinder (35-75) 122.095		1	
Štitnik cilindra 122.098	Cylinder rosettte 122.098		2	
Protuprovalni umetak 141.002	Security pin 141.002		4	
Vijak 433.093	Screw 433.093		6	
Vijak 433.130	Screw 433.130		12	
Vijak 433.131	Screw 433.131		12	

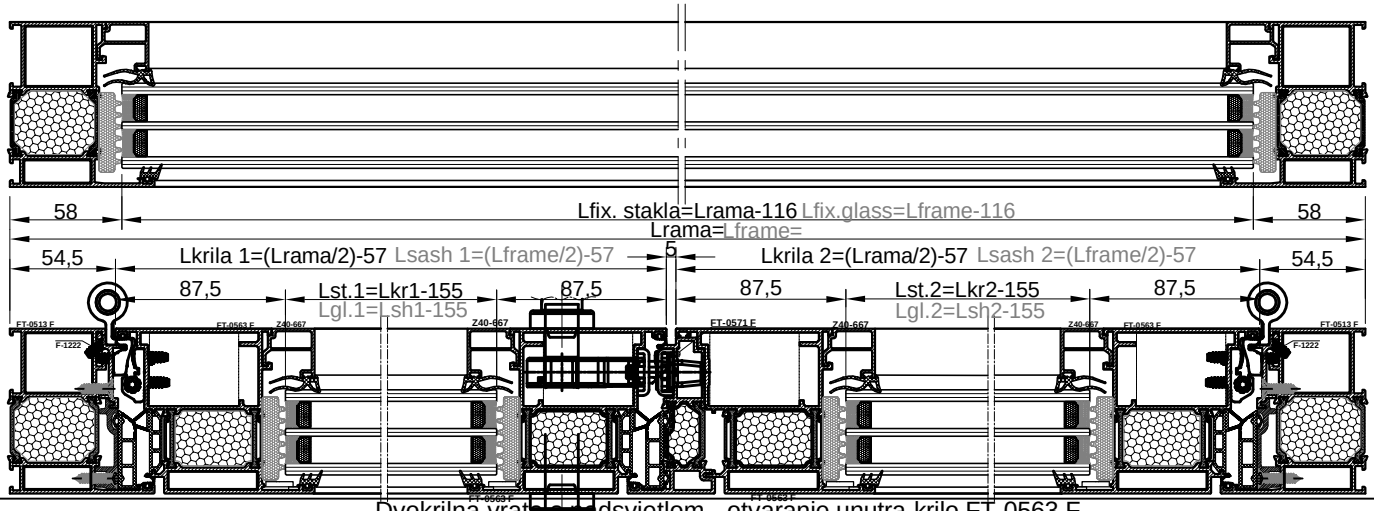


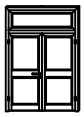




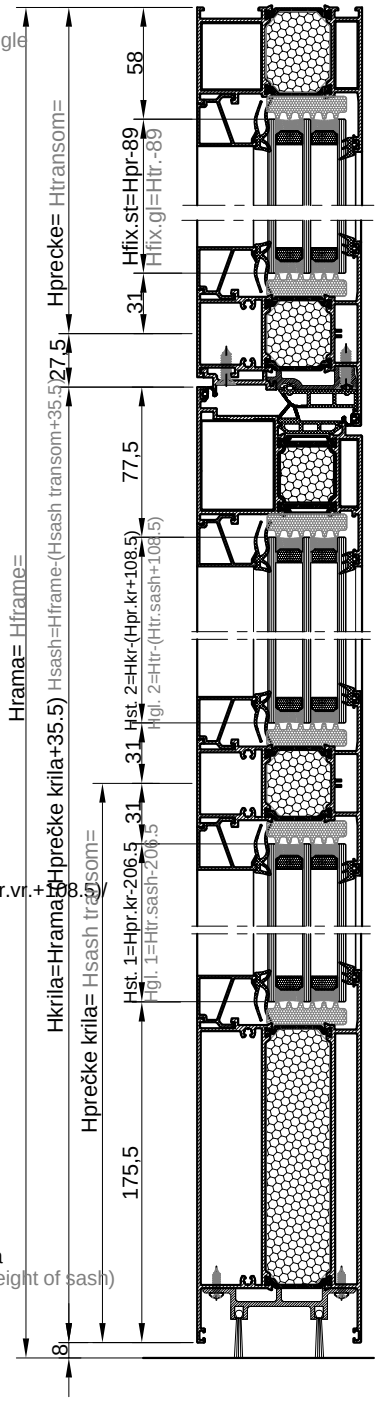
naziv name		mjera dimension	kom. pcs.	pilanje sawing angle
Ram FT-0513F	Frame FT-0513F	L	1	45-45
Ram FT-0513F	Frame FT-0513F	H	2	45-90
Krilo FT-0563F	Sash FT-0563F	(L/2)-57	4	45-45
Krilo FT-0563F	Sash FT-0563F	H-(Hpr+37.5)	4	45-45
Prag FT-0584F	Threshold FT-0584F	L-180	1	90-90
Okapnica F-1200	Drip cap profile F-1200	Lkr-54	2	90-90
Staklo lajsna Z40-667	Glazing bead Z40-667	L-99	2	90-90
Staklo lajsna Z40-667	Glazing bead Z40-667	Lkr-161	8	90-90
Staklo lajsna Z40-667	Glazing bead Z40-667	Hpr.-116	2	90-90
Staklo lajsna Z40-667	Glazing bead Z40-667	Hpr.vr.-147	4	90-90
Staklo lajsna Z40-667	Glazing bead Z40-667	H-(Hpr.+Hpr.vr.+184.5)	4	90-90
Prečka FT-0575F	Transom FT-0575F	L-87.5	1	90-90
Prečka na krilu FT-0575F	Transom-in sash FT-0575F	Lkr-151	2	90-90
Umetak rama F-1222	Additional profile F-1222	L-89	1	45-45
Umetak rama F-1222	Additional profile F-1222	H-(Hpr+17.7)	2	45-90
Profil kombatute FT-0571F	Flying mullion FT-0571F	Hkr-57	1	90-90
Kutna spojnica 710.145	Corner bracket 710.145		2	
Kutna spojnica 710.141	Corner bracket 710.141		8	
Kutna spojnica 710.136	Corner bracket 710.136		8	
Kutna spojnica 731.010	Corner bracket 731.010		8	
Kutna spojnica 710.091	Corner bracket 710.091		2	
Kutna spojnica 730.001	Corner bracket 730.001		18	
Veznik prečke 710.066	T bracket 710.066		12	
Veznik prečke 710.079	T bracket 710.079		4	
Veznik prečke 710.171	T bracket 710.171		8	
Centralna brtva rama 334.005	Central gasket-frame 334.005	1L+3Hkr		
Centralna brtva krila 334.006	Central gasket-sash 334.006	4Lkr+3Hkr		
Brtva na spoju rama i krila 321.006	Rebate gasket 321.006	1L+4Lkr+6Hkr		
Brtva prema staklu vanjska 321.003	Glazing gasket -external- 321.003	2L+8Lkr+2Hpr+4Hkr		
Brtva prema staklu unutarnja 311.004	Glazing gasket -internal- 311.004	2L+8Lkr+2Hpr+4Hkr		
Brtva praga 331.013	Threshold gasket 331.013	L-180	1	90-90
Četkica 7x9	Brush seal 7x9	Lkr-35	1	90-90
Četkica 7x9	Brush seal 7x9	Lkr-2	1	90-90
Izolacijski umetak 340.013	Underglass insulator 340.013	2(L-91.5)+2(Hpr.-89)		
Izolacijski umetak 340.013	Underglass insulator 340.013	8(Lkr.-151)+4(Hpr.vr.-118.5)+4/Hkr.-(Hpr.vr.+118.5)/		
Čep okapnice F-1200 373.027	End cap for F-1200 373.027		2 para	
Umetak na pragu 373.019	End cap for threshold 373.019		1 par	
Čep kombatute 363.014	End cap for flying mullion 363.014		1 par	
Umetak na ramu 374.043	Additional pvc profile 374.043	L-88	1	
Umetak na ramu 374.043	Additional pvc profile 374.043	H-(Hpr+17)	2	45-45
Brava G-U Secury s MR2 (45) tri ključanja 122.015	Multipoint lock - G-U Secury MR2 (45) -122.015		1	45-90
Brava G-U za pom. krilo (desna) 122.082	Lever-operated gear for passive leaf G-U (right) 122.082		1	
Gornji element za nastavljanje 122.026	Top shoot bolt unit 122.026		1	
Donji element za nastavljanje 122.027	Bottom shoot bolt unit 122.027		1	
Gornja prihvatna pločica 122.028	Top striking plate 122.028		1	
Donja prihvatna pločica 122.080	Bottom striking plate 122.080		1	
Trodijelna cilindrična šarka 112.011.01 - bijela	Barrel door hinge-3 part 112.011.01 - white	2 ili (3) po krilu ovisno o visini i tež.krila 2 or (3) per sash(dep. of height and weight of sash)		
Ručka za vrata 102.028	Door handle 102.028		2	
Četvrtka 102.025	Square spindle 102.025		1	
Cilindar (35-75) 122.095	Cylinder (35-75) 122.095		1	
Štitnik cilindra 122.098	Cylinder rosettte 122.098		2	
Protuprovalni umetak 141.002	Security pin 141.002		4	

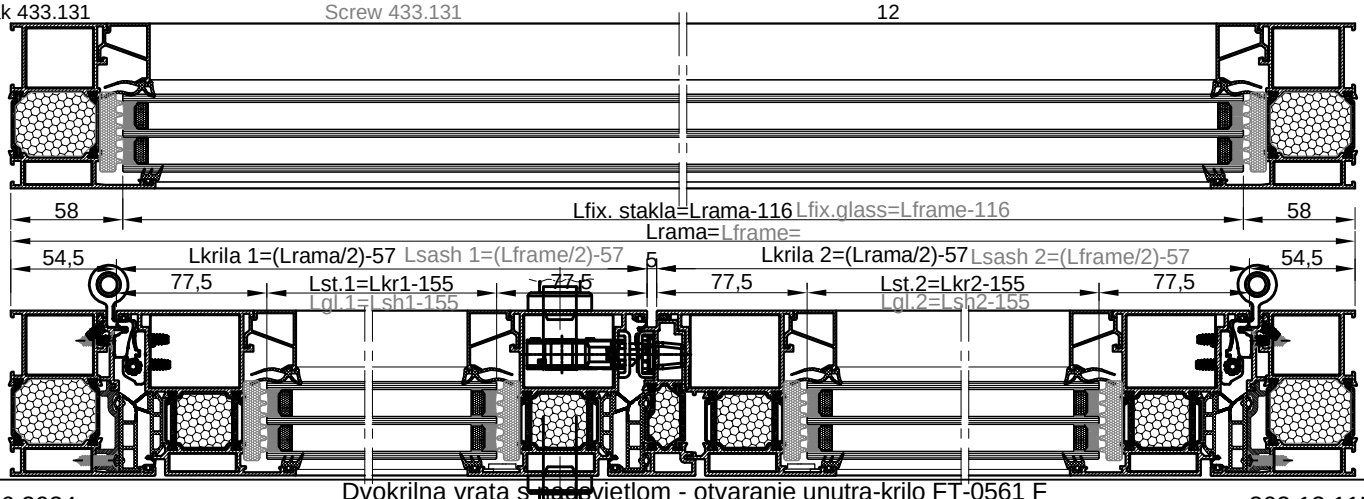




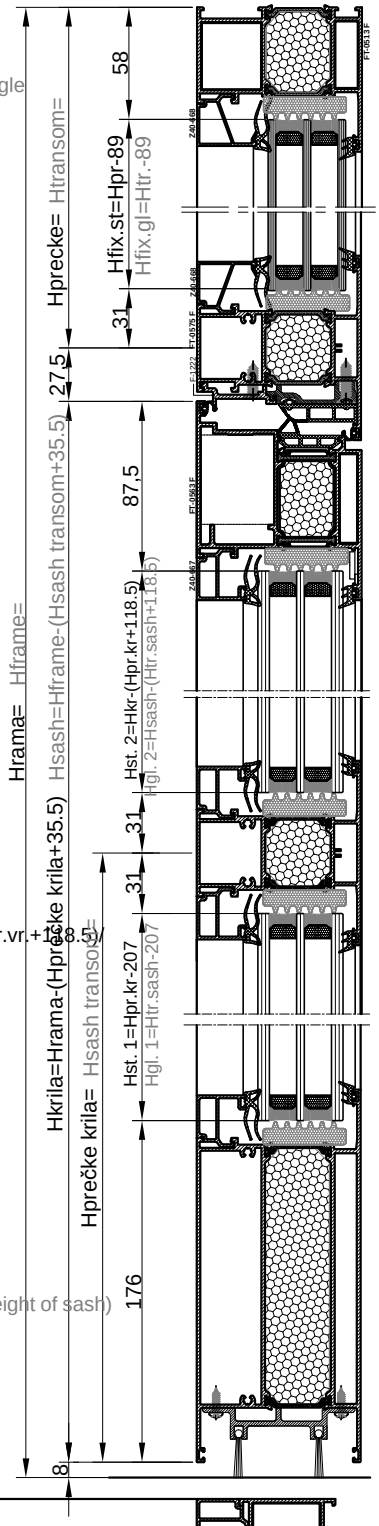


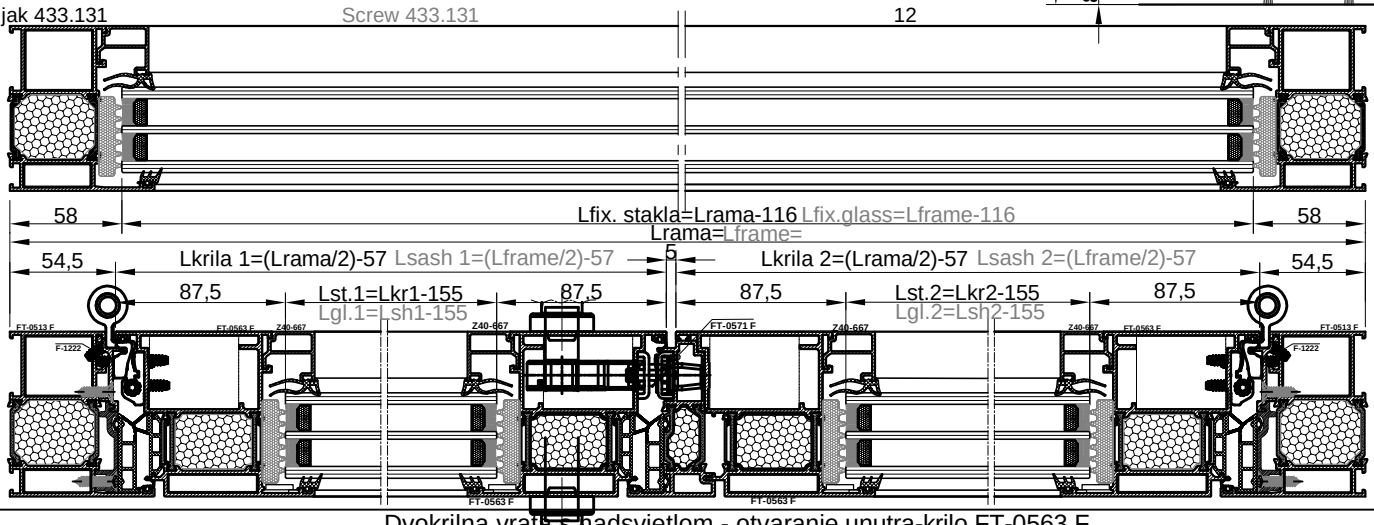
naziv name		mjera diemension	kom. pcs.	pilanje sawing angle
Ram FT-0513F	Frame FT-0513F	L	1	45-45
Ram FT-0513F	Frame FT-0513F	H	2	45-90
Krilo FT-0561F	Sash FT-0561F	(L/2)-57	2	45-45
Krilo FT-0561F	Sash FT-0561F	H-(Hpr.kr.+35.5)	4	45-90
Staklo lajsna Z40-668	Glazing bead Z40-668	L-99	2	90-90
Staklo lajsna Z40-668	Glazing bead Z40-668	Lkr-141	8	90-90
Staklo lajsna Z40-668	Glazing bead Z40-668	Hpr.-116	2	90-90
Staklo lajsna Z40-668	Glazing bead Z40-668	Hpr.vr.-233.5	4	90-90
Staklo lajsna Z40-668	Glazing bead Z40-668	H-(Hpr.+Hpr.vr.+172.5)	4	90-90
Prečka FT-0575F	Transom FT-0575F	L-87.5	1	90-90
Prečka na krilu FT-0575F	Transom-in sash FT-0575F	Lkr-128	2	90-90
Umetak rama F-1222	Additional profile F-1222	L-89.1	1	45-45
Umetak rama F-1222	Additional profile F-1222	H-(Hpr.+17.7)	2	45-90
Parapetna prečka FT-0576F	Tran.-bottom sash prof. FT-0576F	Lkr-128	2	90-90
Profil kombatute FT-0571F	Flying mullion FT-0571F	Hkr-28.5	1	90-90
Kutna spojnica 710.145	Corner bracket 710.145		2	
Kutna spojnica 710.141	Corner bracket 710.141		4	
Kutna spojnica 710.136	Corner bracket 710.136		4	
Kutna spojnica 731.010	Corner bracket 731.010		4	
Kutna spojnica 710.091	Corner bracket 710.091		2	
Kutna spojnica 730.001	Corner bracket 730.001		10	
Veznik prečke 710.066	T bracket 710.066		20	
Veznik prečke 710.079	T bracket 710.079		4	
Veznik prečke 710.171	T bracket 710.171		16	
Centralna brtva rama 334.005	Central gasket-frame 334.005	1L+3Hkr		
Centralna brtva krila 334.006	Central gasket-sash 334.006	2Lkr+3Hkr		
Brtva 321.006	Rebate gasket 321.006	1L+2Lkr+6Hkr		
Brtva prema staklu vanjska 321.003	Glazing gasket -external- 321.003	1L+2H+8Lkr+4Hkr		
Brtva prema staklu unutarnja 311.004	Glazing gasket -internal- 311.004	1L+2H+8Lkr+4Hkr		
Izolacijski umetak 340.013	Underglass insulator 340.013	2(L-91.5)+2(Hpr.-89)		
Izolacijski umetak 340.013	Underglass insulator 340.013	8(Lkr.-131)+4(Hpr.vr.-207)+4/Hkr.-(Hpr.vr.+138.5)/		
Čep kombatute 363.014	End cap for flying mullion 363.014		1 par	
Umetak na ramu 374.043	Additional pvc profile 374.043	L-88	1	45-45
Umetak na ramu 374.043	Additional pvc profile 374.043	H-(Hpr+17)	2	45-90
Pvc umetak u parap. prečki 374.048	Pvc prof. for transom /bottom sash prof./ 374.048	Lkr-18	1	90-90
Pvc umetak u parap. prečki 374.048	Pvc prof. for transom /bottom sash prof./ 374.048	Lkr-33	1	90-90
Četkasta brtva 347.001	Brush seal 347.001		4	
Brava G-U Secury s MR2 (35) tri ključanja 122.016	Multipoint lock - G-U Secury MR2 (35) -122.016		1	
Brava G-U za pom. krilo (desna) 122.082	Lever-operated gear for passive leaf G-U (right) 122.082		1	
Gornji element za nastavljanje 122.026	Top shoot bolt unit 122.026		1	
Donji element za nastavljanje 122.027	Bottom shoot bolt unit 122.027		1	
Gornja prihvatna pločica 122.028	Top striking plate 122.028		1	
Podna čahura za osovina Ø12 120.005	Brass floor socket (inside hole Ø12) 120.005		1	
Trodijelna cilindrična šarka 112.011.01 - bijela	Barrel door hinge-3 part 112.011.01 - white	2 ili (3) po krilu ovisno o visini i tež.krila 2 or (3) per sash(dep. of height and weight of sash)		
Ručka za vrata 102.028	Door handle 102.028		2	
Četvrtka 102.025	Square spindle 102.025		1	
Cilindar (35-75) 122.095	Cylinder (35-75) 122.095		1	
Štitnik cilindra 122.098	Cylinder rosettte 122.098		2	
Protuprovalni umetak 141.002	Security pin 141.002		4	
Vijak 433.130	Screw 433.130		12	
Vijak 433.131	Screw 433.131		12	



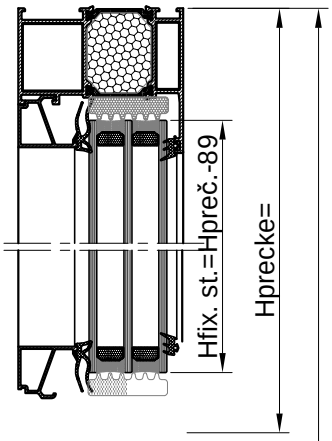


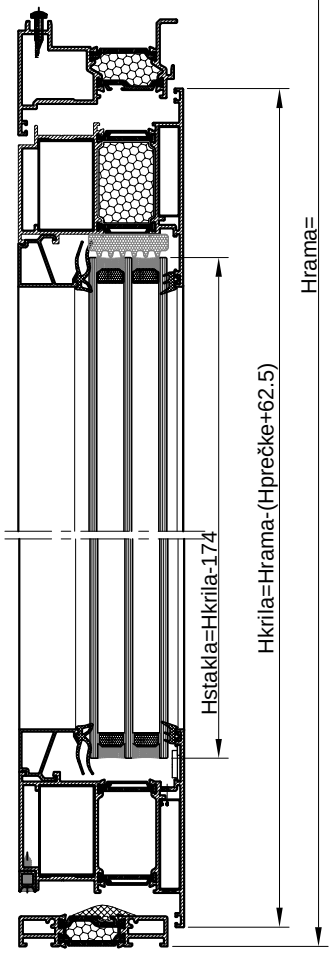
naziv name		mjera dimension	kom. pcs.	pilanje sawing angle
Ram FT-0513F	Frame FT-0513F	L	1	45-45
Ram FT-0513F	Frame FT-0513F	H	2	45-90
Krilo FT-0563F	Sash FT-0563F	(L/2)-57	2	45-45
Krilo FT-0563F	Sash FT-0563F	H-(Hpr.kr.+35.5)	4	45-90
Staklo lajsna Z40-667	Glazing bead Z40-667	L-99	2	90-90
Staklo lajsna Z40-667	Glazing bead Z40-667	Lkr-161	8	90-90
Staklo lajsna Z40-667	Glazing bead Z40-667	Hpr.-116	2	90-90
Staklo lajsna Z40-667	Glazing bead Z40-667	Hpr.vr.-233.5	4	90-90
Staklo lajsna Z40-667	Glazing bead Z40-667	H-(Hpr.+Hpr.vr.+182.5)	4	90-90
Prečka FT-0575F	Transom FT-0575F	L-87.5	1	90-90
Prečka na krilu FT-0575F	Transom-in sash FT-0575F	Lkr-151	2	90-90
Umetak rama F-1222	Additional profile F-1222	L-89	1	45-45
Umetak rama F-1222	Additional profile F-1222	H-(Hpr.+17.5)	2	45-90
Parapetna prečka FT-0576F	Tran.-bottom sash prof. FT-0576F	Lkr-151	2	90-90
Profil kombatute FT-0571F	Flying mullion FT-0571F	Hkr-28.5	1	90-90
Kutna spojnica 710.145	Corner bracket 710.145		2	
Kutna spojnica 710.141	Corner bracket 710.169		4	
Kutna spojnica 710.136	Corner bracket 710.136		4	
Kutna spojnica 731.010	Corner bracket 731.010		4	
Kutna spojnica 710.091	Corner bracket 710.091		2	
Kutna spojnica 730.001	Corner bracket 730.001		10	
Veznik prečke 710.066	T bracket 710.066		20	
Veznik prečke 710.079	T bracket 710.079		4	
Veznik prečke 710.171	T bracket 710.171		16	
Centralna brtva rama 334.005	Central gasket-frame 334.005	1L+3Hkr		
Centralna brtva krila 334.006	Central gasket-sash 334.006	2Lkr+3Hkr		
Brtva 321.006	Rebate gasket 321.006	1L+2Lkr+6Hkr		
Brtva prema staklu vanjska 321.003	Glazing gasket -external- 321.003	1L+2H+8Lkr+4Hkr		
Brtva prema staklu unutarnja 311.004	Glazing gasket -internal- 311.004	1L+2H+8Lkr+4Hkr		
Izolacijski umetak 340.013	Underglass insulator 340.013	2(L-91.5)+2(Hpr.-89)		
Izolacijski umetak 340.013	Underglass insulator 340.013	8(Lkr.-151)+4(Hpr.vr.-217)+4/Hkr.-(Hpr.vr.+118.5)		
Čep kombatute 363.014	End cap for flying mullion 363.014		1 par	
Umetak na ramu 374.043	Additional pvc profile 374.043	L-88	1	45-45
Umetak na ramu 374.043	Additional pvc profile 374.043	H-(Hpr+17)	2	45-90
Pvc umetak u parap. prečki 374.048	Pvc prof. for transom /bottom sash prof./ 374.048	Lkr-18	1	90-90
Pvc umetak u parap. prečki 374.048	Pvc prof. for transom /bottom sash prof./ 374.048	Lkr-33	1	90-90
Četkasta brtva 347.001	Brush seal 347.001		4	
Brava G-U Secury s MR2 (45) tri ključanja 122.015	Multipoint lock - G-U Secury MR2 (45) -122.015		1	
Brava G-U za pom. krilo (desna) 122.082	Lever-operated gear for passive leaf G-U (right) 122.082		1	
Gornji element za nastavljanje 122.026	Top shoot bolt unit 122.026		1	
Donji element za nastavljanje 122.027	Bottom shoot bolt unit 122.027		1	
Gornja prihvatna pločica 122.028	Top striking plate 122.028		1	
Podna čahura za osovina Ø12 120.005	Brass floor socket (inside hole Ø12) 120.005		1	
Trodijelna cilindrična šarka 112.011.01 - bijela	Barrel door hinge-3 part 112.011.01 - white	2 ili (3) po krilu ovisno o visini i tež.krila 2 or (3) per sash(dep. of height and weight of sash)		
Ručka za vrata 102.028	Door handle 102.028		2	
Četvrtka 102.025	Square spindle 102.025		1	
Cilindar (35-75) 122.095	Cylinder (35-75) 122.095		1	
Štitnik cilindra 122.098	Cylinder rosettte 122.098		2	
Protuprovalni umetak 141.002	Security pin 141.002		4	
Vijak 433.130	Screw 433.130		12	
Vijak 433.131	Screw 433.131		12	

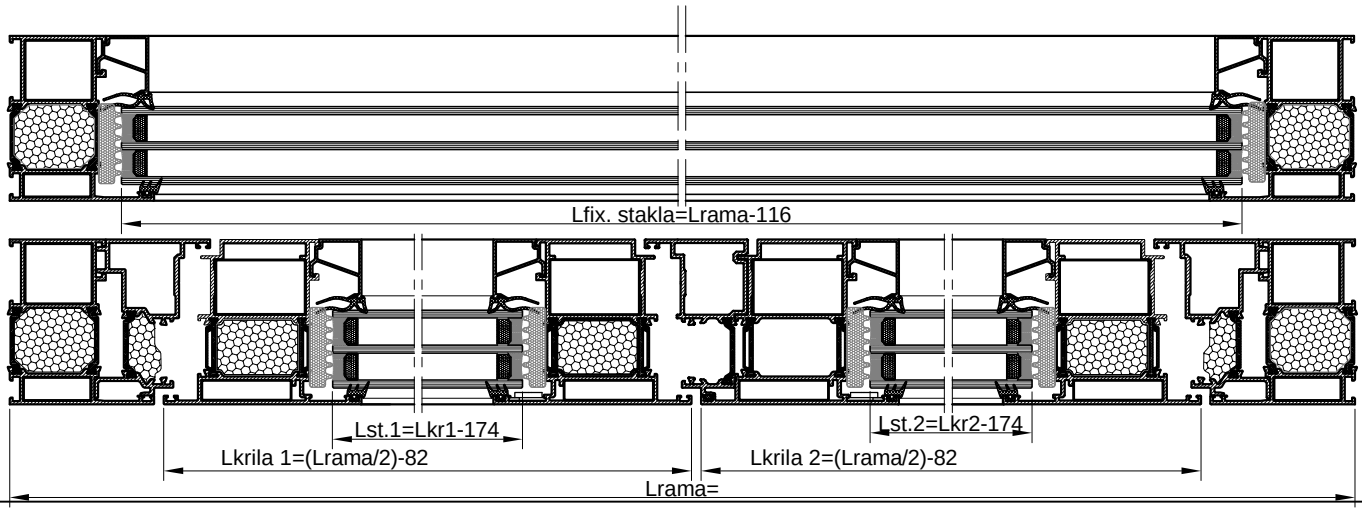


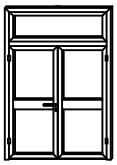


name	dimension	pcs.	
Ram FT-0513F	L	1	45-45
Ram FT-0513F	H	2	45-90
Krilo FT-0562F	L/2-82	4	45-45
Krilo FT-0562F	H-(Hpr.+62.5)	4	45-45
Umetak F-1188	Lkr-58	2	90-90
Prečka FT-0575F	L-87.5	1	90-90
Staklo lajsna Z40-668	L-99	2	90-90
Staklo lajsna Z40-668	Lkr-160	4	90-90
Prag FT-0585F	L-217	1	90-90
Umetak FT-0573F	L-87.5	1	45-45
Umetak FT-0573F	H-(Hpr.+17)	2	45-90
Profil za prebacivanje FT-0572F	Hkr-65	1	90-90

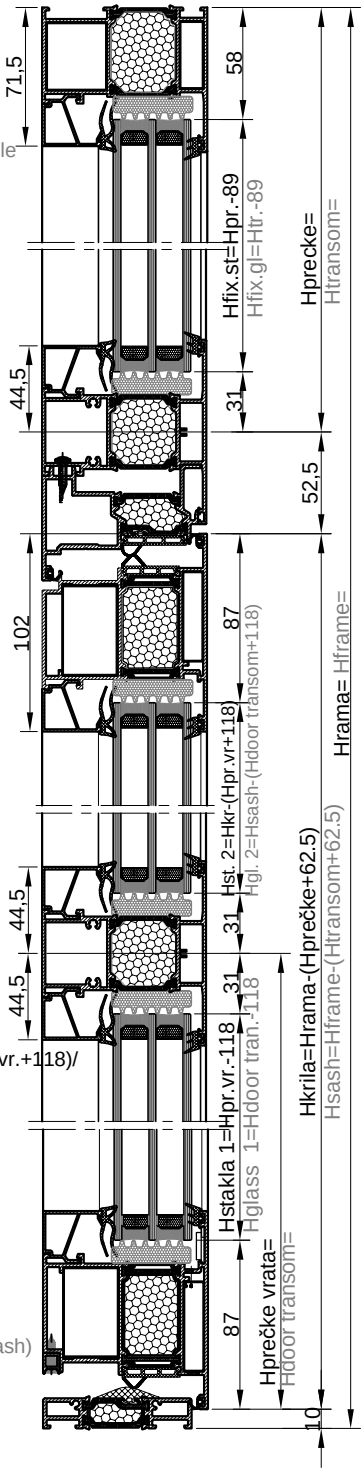


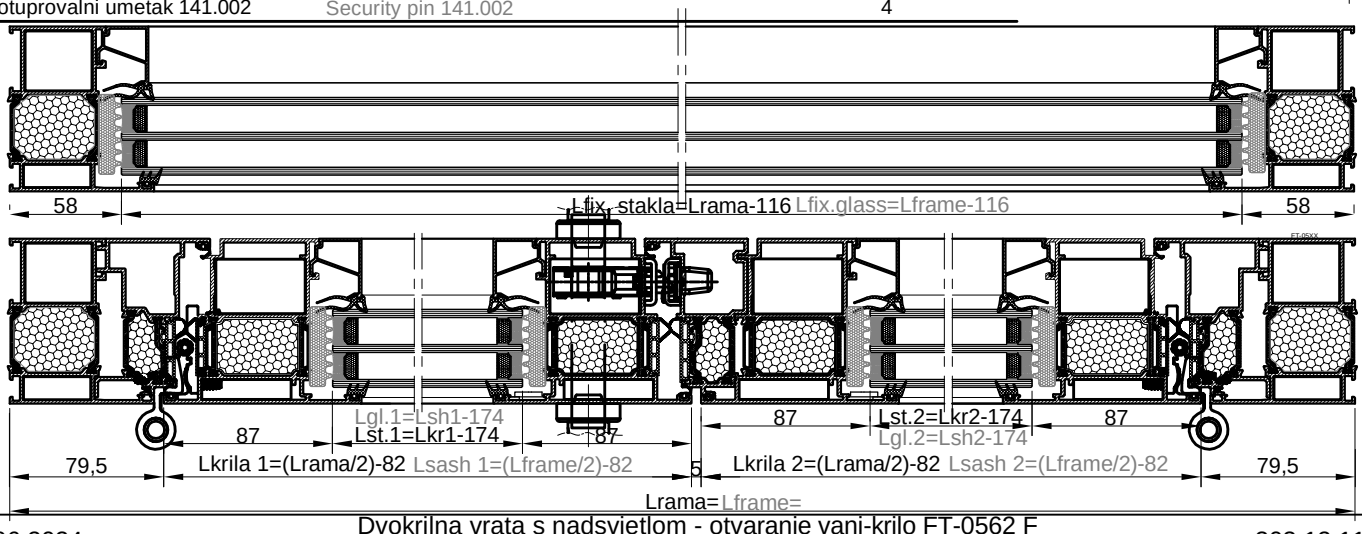


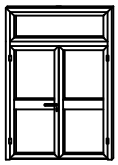




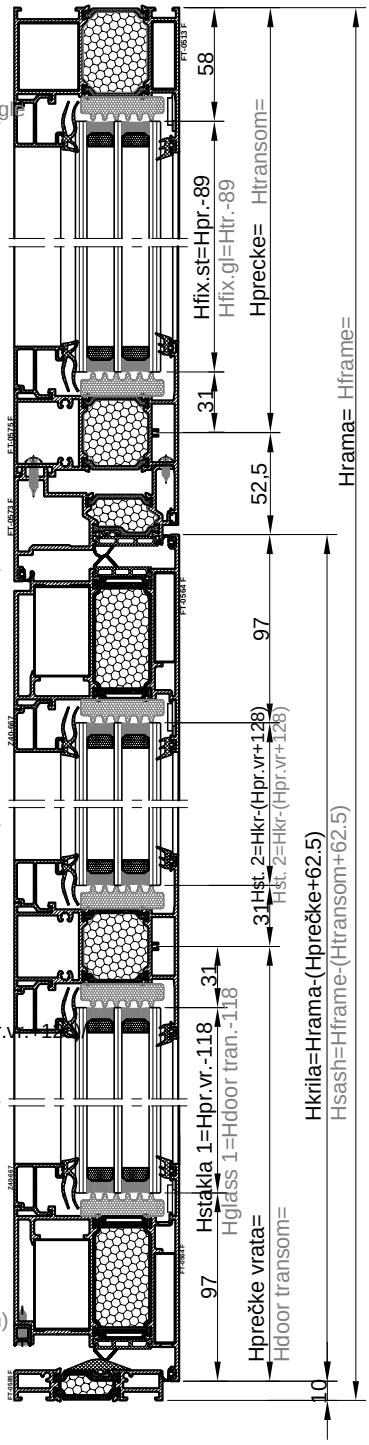
naziv name		mjera dimension	kom. pcs.	pilanje sawing angle
Ram FT-0513F	Frame FT-0513F	L	1	45-45
Ram FT-0513F	Frame FT-0513F	H	2	45-90
Krilo FT-0562F	Sash FT-0562F	L/2-82	4	45-45
Krilo FT-0562F	Sash FT-0562F	H-(Hpr.+62.5)	4	45-90
Umetak F-1188	Additional profile F-1188	Lkr-58	2	90-90
Prečka FT-0575F	Transom FT-0575F	L-87.5	1	90-90
Prečka na krilu FT-0575F	Transom-in sash FT-0575F	Lkr.-147	2	90-90
Staklo lajsna Z40-668	Glazing bead Z40-668	L-99	2	90-90
Staklo lajsna Z40-668	Glazing bead Z40-668	Lkr-160	8	90-90
Staklo lajsna Z40-668	Glazing bead Z40-668	Hpr.-116	2	90-90
Staklo lajsna Z40-668	Glazing bead Z40-668	Hpr.vr.-146.5	4	90-90
Staklo lajsna Z40-668	Glazing bead Z40-668	Hkr-(Hpreč.+146.5)	4	90-90
Prag FT-0585F	Threshold FT-0585F	L-217	1	90-90
Umetak FT-0573F	Additional profile FT-0573F	L-87.5	1	45-45
Umetak FT-0573F	Additional profile FT-0573F	H-(Hpreč.+17)	2	45-90
Profil za prebacivanje FT-0572F	Flying mullion FT-0572F	Hkr-65	1	90-90
Kutna spojnica 710.145	Corner bracket 710.145		2	
Kutna spojnica 710.133	Corner bracket 710.133		8	
Kutna spojnica 710.091	Corner bracket 710.091		2	
Kutna spojnica 710.134	Corner bracket 710.134		8	
Kutna spojnica 731.010	Corner bracket 731.010		8	
Kutna spojnica 730.001	Corner bracket 730.001		18	
Veznik prečke 710.066	T bracket 710.066		12	
Veznik prečke 710.079	T bracket 710.079		4	
Veznik prečke 710.171	T bracket 710.171		8	
Centralna brtva rama 334.009	Central gasket-frame 334.009	1 Lrama+3 Hkr		
Centralna brtva krila 334.010	Central gasket-sash 334.010	4 Lkr+3 Hkr		
Brtva prema staklu vanjska 321.003	Glazing gasket -external- 321.003	2 Lrama+8 Lkr+2 Hpr+4 Hkr		
Brtva prema staklu unutarnja 311.004	Glazing gasket -internal- 311.004	2 Lrama+8 Lkr+2 Hpr+4 Hkr		
Brtva na spoju rama i krila 321.006	Rebate gasket 321.006	1 Lrama+4 Lkr+6 Hkr		
Brtva praga 331.012	Threshold gasket 331.012	L-217	1	90-90
Izolacijski umetak 340.013	Underglass insulator 340.013	2(L-91.5)+2(Hpr.-89)		
Izolacijski umetak 340.013	Underglass insulator 340.013	8(Lkr.-150)+4(Hpr.vr.-118)+4/Hkr.-(Hpr.vr.+118)/		
Umetak na pragu 373.020	End cap for threshold 373.020		1 par	
Čep kombatute 363.016	End cap for flying mullion 363.016		1 par	
Brava G-U Secury s MR2 (35) tri ključanja 122.016	Multipoint lock - G-U Secury MR2 (35) -122.016		1	
Brava G-U za pom. krilo (lijeva) 122.025	Lever-operated gear for passive leaf G-U (left) 122.025		1	
Gornji element za nastavljanje 122.026	Top shoot bolt unit 122.026		1	
Donji element za nastavljanje 122.027	Bottom shoot bolt unit 122.027		1	
Gornja prihvatna pločica 122.028	Top striking plate 122.028		1	
Donja prihvatna pločica 122.080	Bottom striking plate 122.080		1	
Trodijelna cilindrična šarka 112.012.01 - bijela	Barrel door hinge-3 part 112.012.01 - white	2 ili (3) po krilu ovisno o visini i tež.krila 2 or (3) per sash(dep. of height and weight of sash)		
Ručka za vrata 102.028	Door handle 102.028		2	
Četvrtka 102.025	Square spindle 102.025		1	
Cilindar (35-75) 122.095	Cylinder (35-75) 122.095		1	
Štitnik cilindra 122.098	Cylinder rosettte 122.098		2	
Protuprovalni umetak 141.002	Security pin 141.002		4	

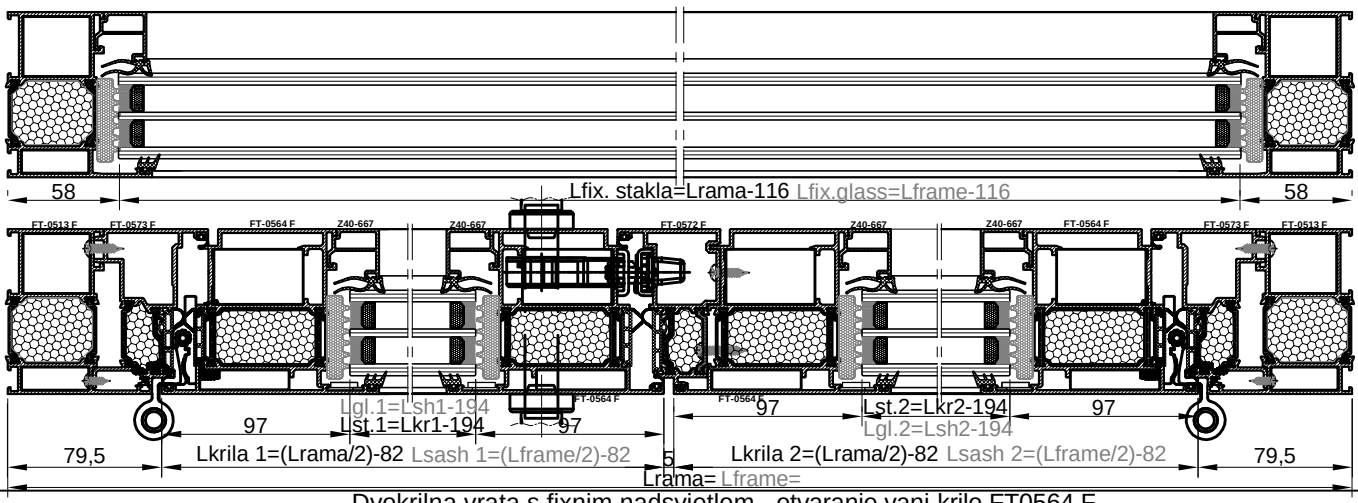


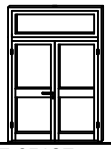




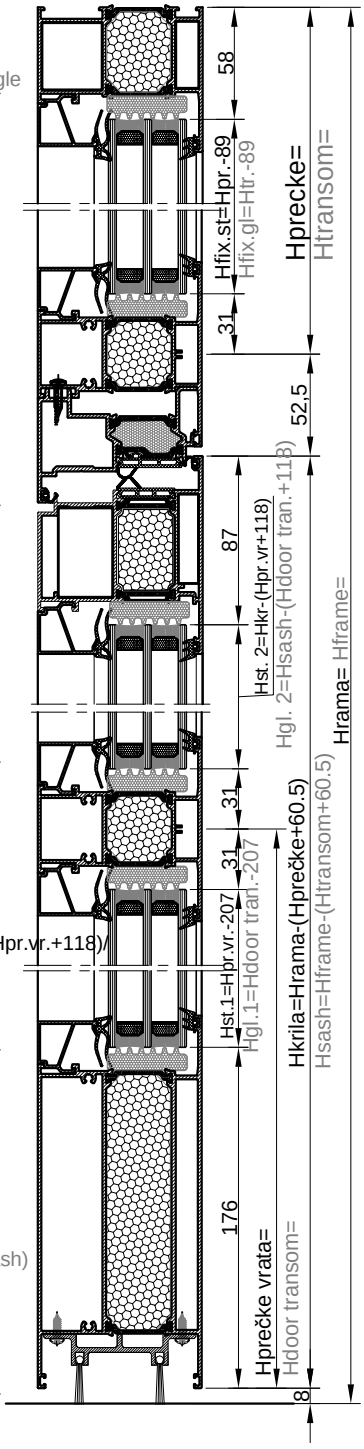
naziv name		mjera dimension	kom. pcs.	pilanje sawing angle
Ram FT-0513F	Frame FT-0513F	L	1	45-45
Ram FT-0513F	Frame FT-0513F	H	2	45-90
Krilo FT-0564F	Sash FT-0564F	L/2-82	4	45-45
Krilo FT-0564F	Sash FT-0564F	H-(Hpr.+62.5)	4	45-45
Umetak F-1188	Additional profile F-1188	Lkr-58	2	90-90
Prečka FT-0575F	Transom FT-0575F	L-87.5	1	90-90
Prečka na krilu FT-0575F	Transom-in sash FT-0575F	Lkr.-167	2	90-90
Staklo lajsna Z40-667	Glazing bead Z40-667	L-99	2	90-90
Staklo lajsna Z40-667	Glazing bead Z40-667	Lkr-180	8	90-90
Staklo lajsna Z40-667	Glazing bead Z40-667	Hpr.-116	2	90-90
Staklo lajsna Z40-667	Glazing bead Z40-667	Hpr.vr.-156.5	4	90-90
Staklo lajsna Z40-667	Glazing bead Z40-667	Hkr-(Hpreč.+156.5)	4	90-90
Prag FT-0585F	Threshold FT-0585 F	L-217	1	90-90
Umetak FT-0573F	Additional profile FT-0573F	L-87.5	1	45-45
Umetak FT-0573F	Additional profile FT-0573F	H-(Hpreč.+17)	2	45-90
Profil za prebacivanje FT-0572F	Flying mullion FT-0572F	Hkr-65	1	90-90
Kutna spojnica 710.145	Corner bracket 710.145		2	
Kutna spojnica 710.133	Corner bracket 710.133		8	
Kutna spojnica 710.091	Corner bracket 710.091		2	
Kutna spojnica 710.134	Corner bracket 710.134		8	
Kutna spojnica 731.010	Corner bracket 731.010		8	
Kutna spojnica 730.001	Corner bracket 730.001		18	
Veznik prečke 710.066	T bracket 710.066		12	
Veznik prečke 710.079	T bracket 710.079		4	
Veznik prečke 710.171	T bracket 710.171		8	
Centralna brtva rama 334.009	Central gasket-frame 334.009	2 Lkr+3 Hkr		
Centralna brtva krila 334.010	Central gasket-sash 334.010	4 Lkr+3 Hkr		
Brtva prema staklu vanjska 321.003	Glazing gasket -external- 321.003	2 Lrama+8 Lkr+2 Hpr+4 Hkr		
Brtva prema staklu unutarnja 311.004	Glazing gasket -internal- 311.004	2 Lrama+8 Lkr+2 Hpr+4 Hkr		
Brtva na spoju rama i krila 321.006	Rebate gasket 321.006	1 Lrama+4 Lkr+6 Hkr		
Brtva praga 331.012	Threshold gasket 331.012	L-217	1	90-90
Izolacijski umetak 340.013	Underglass insulator 340.013	2(L-91.5)+2(Hpr.-89)		
Izolacijski umetak 340.013	Underglass insulator 340.013	8(Lkr.-170)+4(Hpr.vr.-118)+4/Hkr.-(Hpr.vr.+128)		
Umetak na pragu 373.020	End cap for threshold 373.020		1 par	
Čep kombatute 363.016	End cap for flying mullion 363.016		1 par	
Brava G-U Secury s MR2 (45) tri ključanja 122.015	Multipoint lock - G-U Secury MR2 (45) -122.015		1	
Brava G-U za pom. krilo (lijeva) 122.025	Lever-operated gear for passive leaf G-U (left) 122.025		1	
Gornji element za nastavljanje 122.026	Top shoot bolt unit 122.026		1	
Donji element za nastavljanje 122.027	Bottom shoot bolt unit 122.027		1	
Gornja prihvatna pločica 122.028	Top striking plate 122.028		1	
Donja prihvatna pločica 122.080	Bottom striking plate 122.080		1	
Trodijelna cilindrična šarka 112.012.01 - bijela	Barrel door hinge-3 part 112.012.01 - white	2 ili (3) po krilu ovisno o visini i tež.krila 2 or (3) per sash(dep. of height and weight of sash)		
Ručka za vrata 102.028	Door handle 102.028		2	
Četvrtka 102.025	Square spindle 102.025		1	
Cilindar (35-75) 122.095	Cylinder (35-75) 122.095		1	
Štitnik cilindra 122.098	Cylinder rosettte 122.098		2	
Protuprovalni umetak 141.002	Security pin 141.002		4	

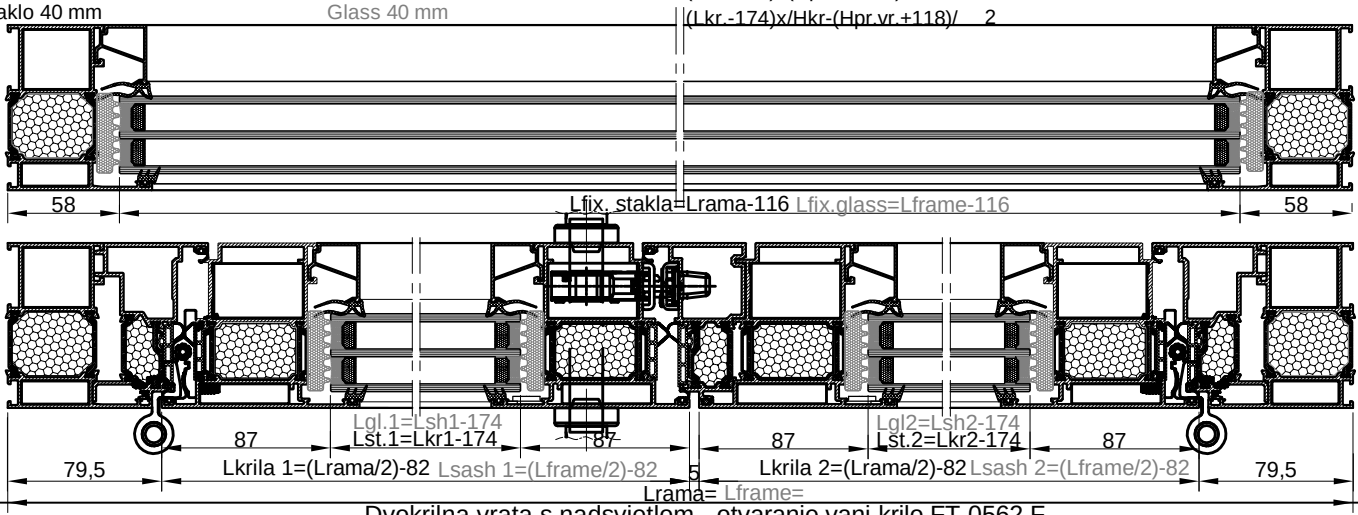


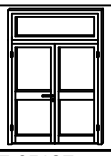




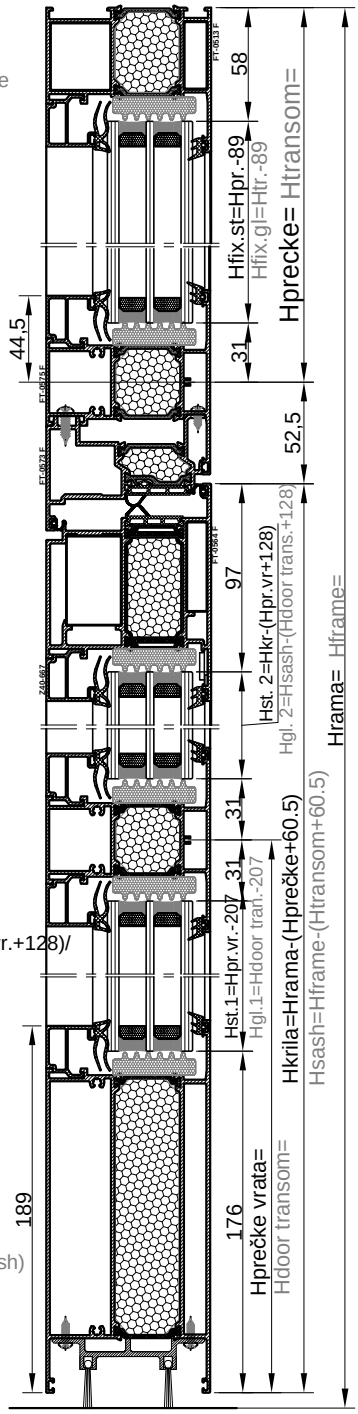
naziv name		mjera dimension	kom. pcs.	pilanje sawing angle
Ram FT-0513F	Frame FT-0513F	L	1	45-45
Ram FT-0513F	Frame FT-0513F	H	2	45-90
Krilo FT-0562F	Sash FT-0562F	L/2-82	2	45-45
Krilo FT-0562F	Sash FT-0562F	H-(Hpr.+60.5)	4	45-90
Prečka FT-0575F	Transom FT-0575F	L-87.5	1	90-90
Prečka na krilu FT-0575F	Transom-in sash FT-0575F	Lkr-147	2	90-90
Staklo lajsna Z40-668	Glazing bead Z40-668	L-99	2	90-90
Staklo lajsna Z40-668	Glazing bead Z40-668	Lkr-160	8	90-90
Staklo lajsna Z40-668	Glazing bead Z40-668	Hpr.-116	2	90-90
Staklo lajsna Z40-668	Glazing bead Z40-668	Hpr.vr.-233.5	4	90-90
Staklo lajsna Z40-668	Glazing bead Z40-668	H-(Hpr.+Hpr.vr.+207)	4	90-90
Parapetna prečka FT-0576F	Transom-bottom sash profile FT-0576F	Lkr-147	2	90-90
Umetak FT-0573F	Additional profile FT-0573F	L-87.5	1	45-45
Umetak FT-0573F	Additional profile FT-0573F	H-(Hpr+17)	2	45-90
Profil za prebacivanje FT-0572F	Flying mullion FT-0572F	Hkr-32.5	1	90-90
Kutna spojnica 710.145	Corner bracket 710.145		2	
Kutna spojnica 710.133	Corner bracket 710.133		4	
Kutna spojnica 710.091	Corner bracket 710.091		2	
Kutna spojnica 710.134	Corner bracket 710.134		4	
Kutna spojnica 731.010	Corner bracket 731.010		4	
Kutna spojnica 730.001	Corner bracket 730.001		12	
Veznik prečke 710.066	T bracket 710.066		20	
Veznik prečke 710.079	T bracket 710.079		4	
Veznik prečke 710.171	T bracket 710.171		16	
Centralna brtva rama 334.009	Central gasket-frame 334.009	1L+3Hkr		
Centralna brtva krila 334.010	Central gasket-sash 334.010	2Lkr+3Hkr		
Brtva prema staklu vanjska 321.003	Glazing gasket -external- 321.003	1L+8Lkr+2Hpr+4Hkr		
Brtva prema staklu unutarnja 311.004	Glazing gasket -internal- 311.004	1L+8Lkr+2Hpr+4Hkr		
Brtva na spoju rama i krila 321.006	Rebate gasket 321.006	1L+2Lkr+6Hkr		
Izolacijski umetak 340.013	Underglass insulator 340.013	2(L-91.5)+2(Hpr.-89)		
Izolacijski umetak 340.013	Underglass insulator 340.013	8(Lkr.-150)+4(Hpr.vr.-207)+4/Hkr.-(Hpr.vr.+118)/		
Čep kombatute 363.016	End cap for flying mullion 363.016		1 par	
Pvc umetak 374.048	Pvc profile 374.048	Lkr-54	1	
Pvc umetak 374.048	Pvc profile 374.048	Lkr-19	1	
Četkasta brtva 347.001	Brush seal 347.001		4	
Brava G-U Secury s MR2 (35) tri ključanja 122.016	Multipoint lock - G-U Secury MR2 (35) -122.016		1	
Brava G-U za pom. krilo (lijeva) 122.025	Lever-operated gear for passive leaf G-U (left) 122.025		1	
Gornji element za nastavljanje 122.026	Top shoot bolt unit 122.026		1	
Donji element za nastavljanje 122.027	Bottom shoot bolt unit 122.027		1	
Gornja prihvatna pločica 122.028	Top striking plate 122.028		1	
Podna čahura za Ø12 120.005	Brass floor socket (inside hole Ø12) 120.005		1	
Trodijelna cilindrična šarka 112.012.01 - bijela	Barrel door hinge-3 part 112.012.01 - white	2 ili (3) po krilu ovisno o visini i tež.krila 2 or (3) per sash(dep. of height and weight of sash)		
Ručka za vrata 102.028	Door handle 102.028		2	
Četvrtka 102.025	Square spindle 102.025		1	
Cilindar (35-75) 122.095	Cylinder (35-75) 122.095		1	
Štitnik cilindra 122.098	Cylinder rosette 123.001.01 - white		2	
Protuprovalni umetak 141.002	Security pin 141.002		4	
Staklo 40 mm	Glass 40 mm	(L-116)x(Hpr.-89)	1	
Staklo 40 mm	Glass 40 mm	(Lkr.-174)x(Hpr.vr.-207)	2	
Staklo 40 mm	Glass 40 mm	(Lkr.-174)x/Hkr-(Hpr.vr.+118)/	2	

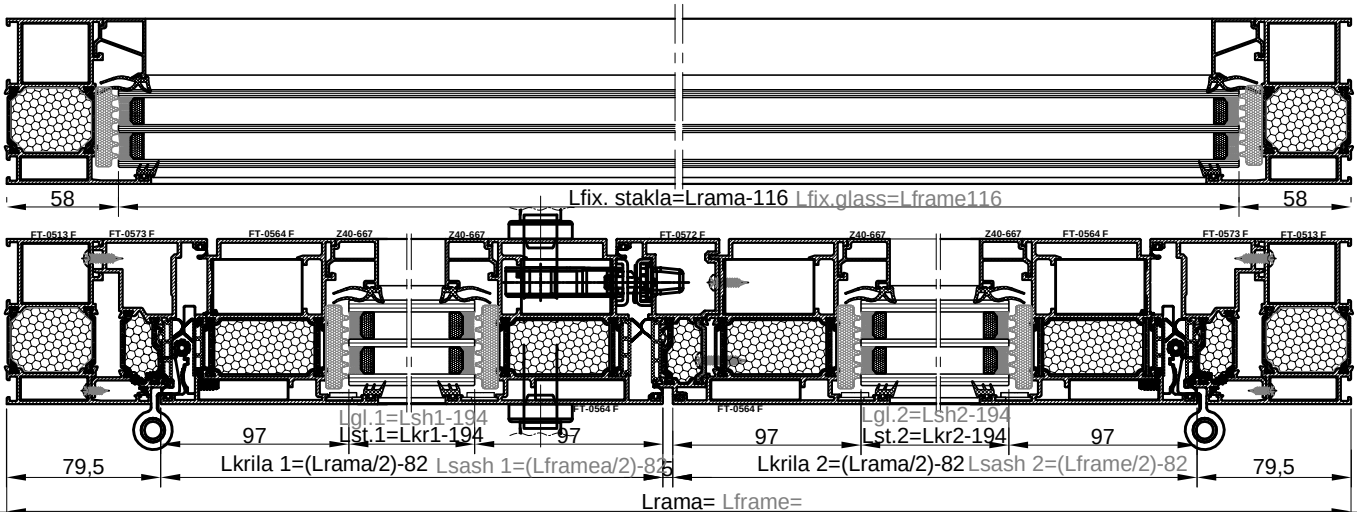






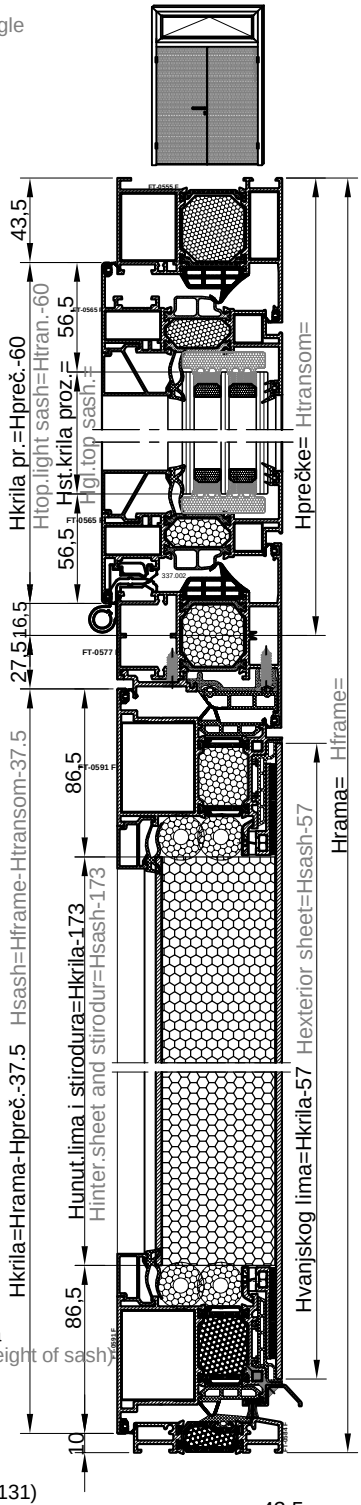
naziv name		mjera dimension	kom. pcs.	pilanje sawing angle
Ram FT-0513F	Frame FT-0513F	L	1	45-45
Ram FT-0513F	Frame FT-0513F	H	2	45-90
Krilo FT-0564F	Sash FT-0564F	L/2-82	2	45-45
Krilo FT-0564F	Sash FT-0564F	H-(Hpr.+60.5)	4	45-90
Prečka FT-0575F	Transom FT-0575F	L-87.5	1	90-90
Prečka na krilu FT-0575F	Transom-in sash FT-0575F	Lkr-167	2	90-90
Staklo lajsna Z40-667	Glazing bead Z40-667	L-99	2	90-90
Staklo lajsna Z40-667	Glazing bead Z40-667	Lkr-180	8	90-90
Staklo lajsna Z40-667	Glazing bead Z40-667	Hpr.-116	2	90-90
Staklo lajsna Z40-667	Glazing bead Z40-667	Hpr.vr.-233.5	4	90-90
Staklo lajsna Z40-667	Glazing bead Z40-667	H-(Hpr.+Hpr.vr.+217)	4	90-90
Parapetna prečka FT-0576F	Tran.-bottom sash prof. FT-0576F	Lkr-167	2	90-90
Umetak FT-0573F	Additional profile FT-0573F	L-87.5	1	45-45
Umetak FT-0573F	Additional profile FT-0573F	H-(Hpr+17)	2	45-90
Profil za prebacivanje FT-0572F	Flying mullion FT-0572F	Hkr-32.5	1	90-90
Kutna spojnica 710.145	Corner bracket 710.145		2	
Kutna spojnica 710.133	Corner bracket 710.133		4	
Kutna spojnica 710.091	Corner bracket 710.091		2	
Kutna spojnica 710.134	Corner bracket 710.134		4	
Kutna spojnica 731.010	Corner bracket 731.010		4	
Kutna spojnica 730.001	Corner bracket 730.001		10	
Veznik prečke 710.066	T bracket 710.066		20	
Veznik prečke 710.079	T bracket 710.079		4	
Veznik prečke 710.171	T bracket 710.171		16	
Centralna brtva rama 334.009	Central gasket-frame 334.009	1L+3Hkr		
Centralna brtva krila 334.010	Central gasket-sash 334.010	2Lkr+3Hkr		
Brtva prema staklu vanjska 321.003	Glazing gasket -external- 321.003	1L+8Lkr+2Hpr+4Hkr		
Brtva prema staklu unutarnja 311.004	Glazing gasket -internal- 311.004	1L+8Lkr+2Hpr+4Hkr		
Brtva na spoju rama i krila 321.006	Rebate gasket 321.006	1L+2Lkr+6Hkr		
Izolacijski umetak 340.013	Underglass insulator 340.013	2(L-91.5)+2(Hpr.-89)		
Izolacijski umetak 340.013	Underglass insulator 340.013	8(Lkr.-170)+4(Hpr.vr.-207)+4/Hkr.-(Hpr.vr.+128)/		
Čep kombatute 363.016	End cap for flying mullion 363.016		1 par	
Pvc umetak 374.048	Pvc profile 374.048	Lkr-54	1	
Pvc umetak 374.048	Pvc profile 374.048	Lkr-19	1	
Četkasta brtva 347.001	Brush seal 347.001		4	
Brava G-U Secury s MR2 (45) tri ključanja 122.015	Multipoint lock - G-U Secury MR2 (45) -122.015		1	
Brava G-U za pom. krilo (lijeva) 122.025	Lever-operated gear for passive leaf G-U (left) 122.025		1	
Gornji element za nastavljanje 122.026	Top shoot bolt unit 122.026		1	
Donji element za nastavljanje 122.027	Bottom shoot bolt unit 122.027		1	
Gornja prihvatna pločica 122.028	Top striking plate 122.028		1	
Podna čahura za Ø12 120.005	Brass floor socket (inside hole Ø12) 120.005		1	
Trodijelna cilindrična šarka 112.012.01 - bijela	Barrel door hinge-3 part 112.012.01 - white	2 ili (3) po krilu ovisno o visini i tež.krila 2 or (3) per sash(dep. of height and weight of sash)		
Ručka za vrata 102.028	Door handle 102.028		2	
Četvrtka 102.025	Square spindle 102.025		1	
Cilindar (35-75) 122.095	Cylinder (35-75) 122.095		1	
Štitnik cilindra 122.098	Cylinder rosettte 122.098		2	
Protuprovalni umetak 141.002	Security pin 141.002		4	

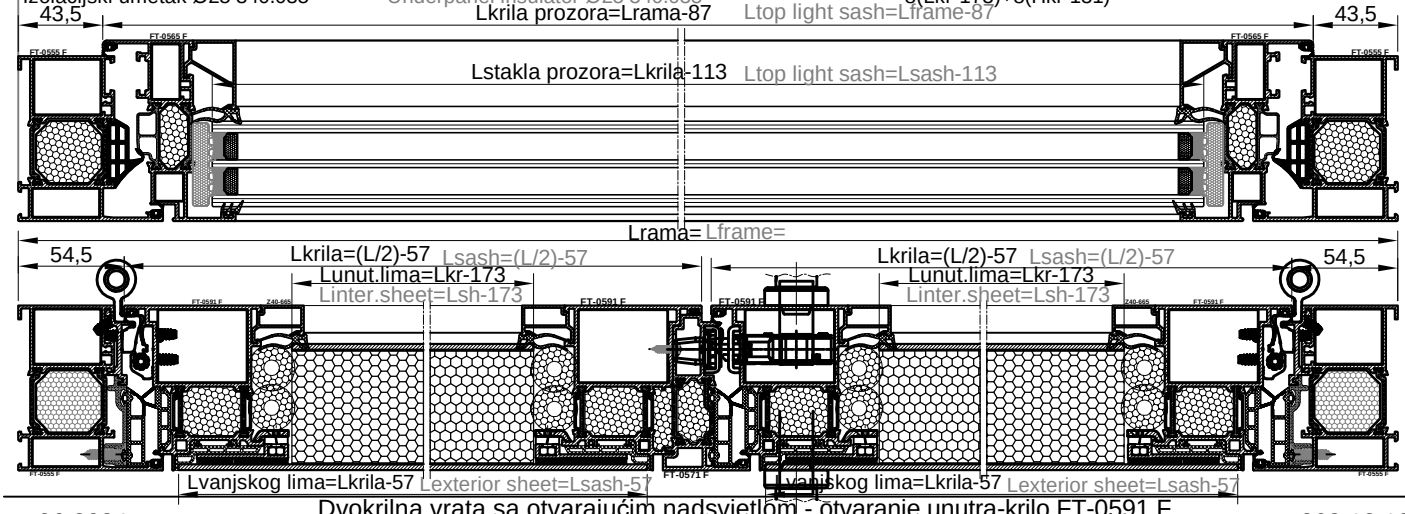




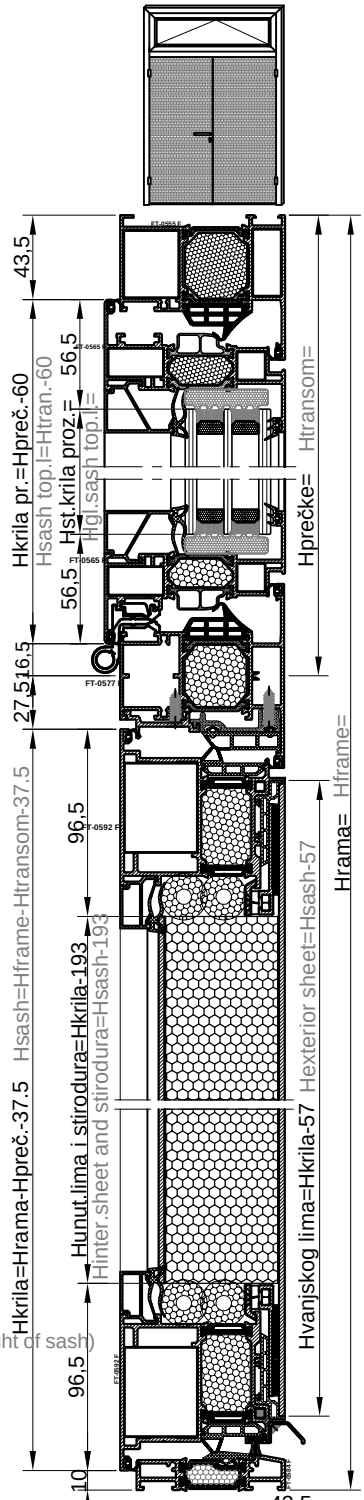
Dvokrilna vrata s nadsvjetlom - otvaranje vani
Double-leaf doorwith fixed top light - outward opening

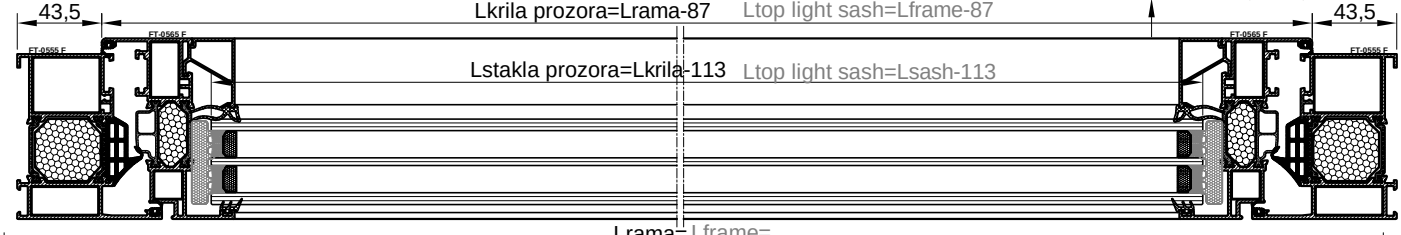
naziv name		mjera dimension	kom. pcs.	pilanje sawing angle
Ram FT-0555F	Frame FT-0555F	L	1	45-45
Ram FT-0555F	Frame FT-0555F	H	2	45-90
Krilo FT-0591F	Sash FT-0591F	(L/2)-57	4	45-45
Krilo FT-0591F	Sash FT-0591F	H-Hpreč.-37.5	4	45-45
Prag FT-0584F	Threshold FT-0584F	L-180	1	90-90
Prečka FT-0577F	Transom FT-0577F	L-89	1	90-90
Umetak FT-0571F	Flying mullion FT-0571F	Hkr-57	1	90-90
Krilo prozora FT-0565F	Top light sash FT-0565F	L-87	2	45-45
Krilo prozora FT-0565F	Top light sash FT-0565F	Hpreč.-60	2	45-45
Al umetak F-1222	Additional profile F-1222	L-89	1	45-45
Al umetak F-1222	Additional profile F-1222	H-Hpreč.-17.5	1	45-90
Okapnica F-1200	Drip cap profile F-1200	Lkr-54	2	90-90
Al profil F-1093	Al profile F-1093	Lkr-76	4	45-45
Al profil F-1093	Al profile F-1093	Hkr-76	4	45-45
Staklo lajsna Z40-665	Glazing bead Z40-665	Lkr-141	4	90-90
Staklo lajsna Z40-665	Glazing bead Z40-665	Hkr-185	4	90-90
Staklo lajsna Z40-669	Glazing bead Z40-669	Lkr.proz.-93	2	90-90
Staklo lajsna Z40-669	Glazing bead Z40-669	Hkr.proz.-93	2	90-90
Kutna spojnica 710.072	Corner bracket 710.072		2	
Kutna spojnica 710.173	Corner bracket 710.173		2	
Kutna spojnica 710.136	Corner bracket 710.136		8	
Kutna spojnica 710.015	Corner bracket 710.015		8	
Kutna spojnica 710.203	Corner bracket 710.203		8	
Kutna spojnica 730.001	Corner bracket 730.001		14	
Kutna spojnica 710.485	Corner bracket 710.485		4	
Kutna spojnica 710.458	Corner bracket 710.458		4	
Kopča 141.001	Panel clamp 141.001		(4Lkr+4Hkr)/250	
Centralna brtva rama 334.005	Central gasket-frame 334.005	2Lkr+3Hkr		
Centralna brtva krila 334.006	Central gasket-sash 334.006	4Lkr+3Hkr		
Brtva na spoju rama i krila 321.006	Rebate gasket 321.006	6Lkr+6Hkr+4L+4Hpreč.		
Brtva 344.004	Gasket 344.004	4(Lkr-53)+4(Hkr-53)		
Brtva prema panelu unut. 311.003	Panel gasket-internal 311.003	4Lkr+4Hkr		
Brtva praga 331.013	Threshold gasket 331.013	L-180	1	90-90
Vanjska brtva krila proz. 321.002	Glazing gasket-external 321.002	2L+2Hpreč		
Unutarnja brtva krila proz. 311.004	Glazing gasket-internal 311.004	2L+2Hpreč.		
Centralna brtva prozora 337.002	Central gasket-window 337.002	2L+2Hpreč.		
Četkica 7x9 347.003	Brush seal 7x9 347.003	Lkr-35	2	90-90
Čep okapnice F-1200 373.027	End cap for F-1200 373.027		2 par	
Umetak na pragu 373.019	End cap for threshold 373.019		1 par	
Umetak na ramu 374.043	Add. pvc profile 374.043	L-88	1	45-45
Umetak na ramu 374.043	Add. pvc profile 374.043	H-Hpreč.-17	2	45-90
Brava G-U Secury s MR2 (35)	Multipoint lock - G-U Secury MR2 (35)		1	
tri ključanja 122.016	-122.016			
Brava G-U za pom. krilo (lijeva) 122.025	Lever-operated gear for passive leaf G-U (left) 122.025		1	
Gornji element za nastavljanje 122.026	Top shoot bolt unit 122.026		1	
Donji element za nastavljanje 122.027	Bottom shoot bolt unit 122.027		1	
Gornja prihvatna pločica 122.028	Top striking plate 122.028		1	
Donja prihvatna pločica 122.080	Bottom striking plate 122.080		1	
Trodijelna cilindrična šarka	Barrel door hinge-3 part	2 ili (3) po krilu ovisno o visini i tež.krila		
112.011.01 - bijela	112.011.01 - white	2 or (3) per sash(dep. of height and weight of sash)		
Ručka za vrata 102.028	Door handle 102.028		2	
Četvrtka 102.025	Square spindle 102.025		1	
Cilindar (35-75) 122.095	Cylinder (35-75) 122.095		1	
Štitnik cilindra 122.098	Cylinder rosettte 122.098		2	
Protuprovalni umetak 141.002	Security pin 141.002		4	
Izolacijski umetak Ø25 340.035	Underpanel insulator Ø25 340.035		8(Lkr-173)+8(Hkr-131)	

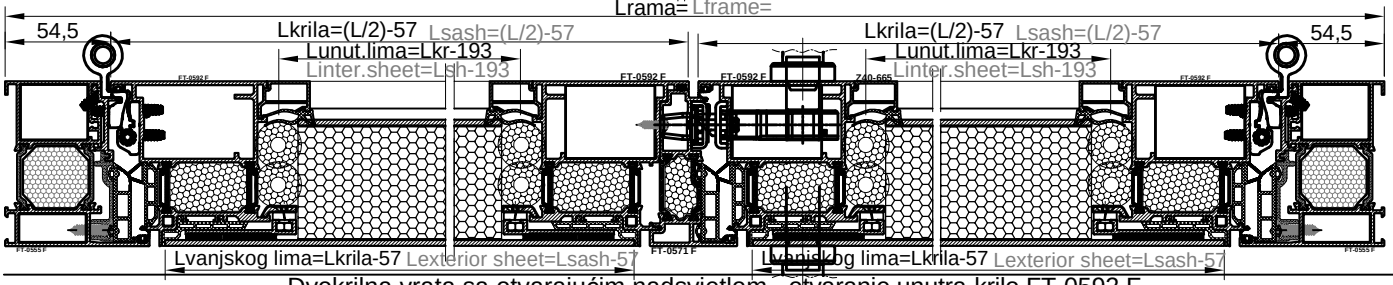




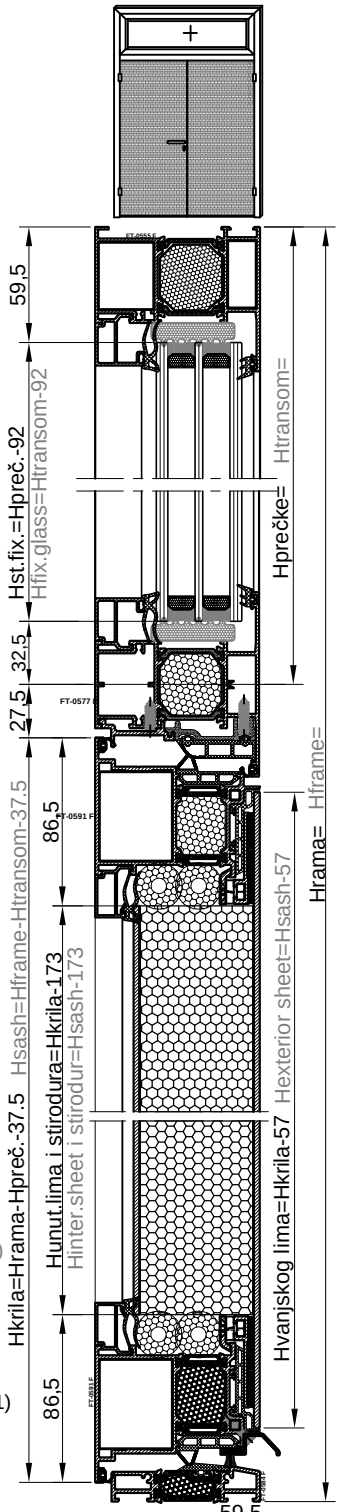
naziv name		mjera dimension	kom. pcs.	pilanje sawing angle
Ram FT-0555F	Frame FT-0555F	L	1	45-45
Ram FT-0555F	Frame FT-0555F	H	2	45-90
Krilo FT-0592F	Sash FT-0592F	(L/2)-57	4	45-45
Krilo FT-0592F	Sash FT-0592F	H-Hpreč.-37.5	4	45-45
Prag FT-0584F	Threshold FT-0584F	L-180	1	90-90
Prečka FT-0577F	Transom FT-0577F	L-89	1	90-90
Umetak FT-0571F	Flying mullion FT-0571F	Hkr-57	1	90-90
Krilo prozora FT-0565F	Top light sash FT-0565F	L-87	2	45-45
Krilo prozora FT-0565F	Top light sash FT-0565F	Hpreč.-60	2	45-45
Al umetak F-1222	Additional profile F-1222	L-89	1	45-45
Al umetak F-1222	Additional profile F-1222	H-Hpreč.-17.5	2	45-90
Okapnica F-1200	Drip cap profile F-1200	Lkr-54	2	90-90
Al profil F-1205	Al profile F-1205	Lkr-76	4	45-45
Al profil F-1205	Al profile F-1205	Hkr-76	4	45-45
Staklo lajsna Z40-665	Glazing bead Z40-665	Lkr-161	4	90-90
Staklo lajsna Z40-665	Glazing bead Z40-665	Hkr-205	4	90-90
Staklo lajsna Z40-669	Glazing bead Z40-669	Lkr.proz.-93	2	90-90
Staklo lajsna Z40-669	Glazing bead Z40-669	Hkr.proz.-93	2	90-90
Kutna spojnica 710.072	Corner bracket 710.072		2	
Kutna spojnica 710.173	Corner bracket 710.173		2	
Kutna spojnica 710.136	Corner bracket 710.136		8	
Kutna spojnica 710.015	Corner bracket 710.015		8	
Kutna spojnica 710.203	Corner bracket 710.203		8	
Kutna spojnica 730.001	Corner bracket 730.001		18	
Kutna spojnica 710.485	Corner bracket 710.485		4	
Kutna spojnica 710.458	Corner bracket 710.458		4	
Kopča 141.001	Panel clamp 141.001		(4Lkr+4Hkr)/250	
Centralna brtva rama 334.005	Central gasket-frame 334.005	2Lkr+2Hkr		
Centralna brtva krila 334.006	Central gasket-sash 334.006	4Lkr+3Hkr		
Brtva na spoju rama i krila 321.006	Rebate gasket 321.006	6Lkr+6Hkr+4L+4Hpreč.		
Brtva 344.004	Brtva 344.004	4(Lkr-53)+4(Hkr-53)		
Brtva prema panelu unut. 311.003	Panel gasket-internal 311.003	4Lkr+4Hkr		
Brtva praga 331.013	Threshold gasket 331.013	L-180	1	90-90
Vanjska brtva krila proz. 321.002	Glazing gasket-external 321.002	2L+2Hpreč.		
Unutarnja brtva krila proz. 311.004	Glazing gasket-internal 311.004	2L+2Hpreč.		
Centralna brtva prozora 337.002	Central gasket-window 337.002	2L+2Hpreč.		
Četkica 7x9 347.003	Brush seal 7x9 347.003	Lkr-35	2	90-90
Čep okapnice F-1200 373.027	End cap for F-1200 373.027		1 par	
Umetak na pragu 373.019	End cap for threshold 373.019		1 par	
Umetak na ramu 374.043	Add. pvc profile 374.043	L-88	1	45-45
Umetak na ramu 374.043	Add. pvc profile 374.043	H-Hpreč.-17	2	45-90
Brava G-U Secury s MR2 (45) tri ključanja 122.015	Multipoint lock - G-U Secury MR2 (45) -122.015		1	
Brava G-U za pom. krilo (lijeva) 122.025	Lever-operated gear for passive leaf G-U (left) 122.025		1	
Gornji element za nastavljanje 122.026	Top shoot bolt unit 122.026		1	
Donji element za nastavljanje 122.027	Bottom shoot bolt unit 122.027		1	
Gornja prihvatna pločica 122.028	Top striking plate 122.028		1	
Donja prihvatna pločica 122.080	Bottom striking plate 122.080		1	
Trodijelna cilindrična šarka 112.011.01 - bijela	Barrel door hinge-3 part 112.011.01 - white	2 ili (3) po krilu ovisno o visini i tež.krila 2 or (3) per sash(dep. of height and weight of sash)		
Ručka za vrata 102.028	Door handle 102.028		2	
Četvrtka 102.025	Square spindle 102.025		1	
Cilindar (35-75) 122.095	Cylinder (35-75) 122.095		1	
Štitnik cilindra 122.098	Cylinder rosettte 122.098		2	
Protuprovalni umetak 141.002	Security pin 141.002		4	
Izolacijski umetak Ø25 340.035	Underpanel insulator Ø25 340.035		8(Lkr-193)+8(Hkr-151)	

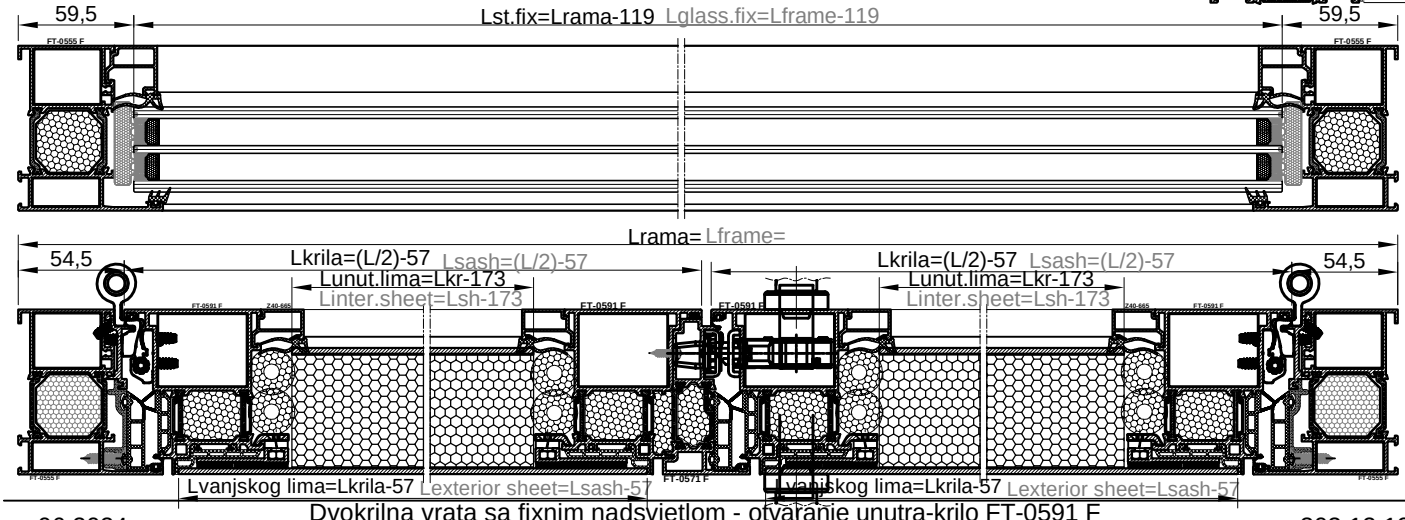




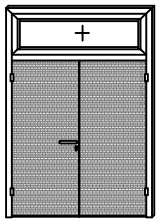


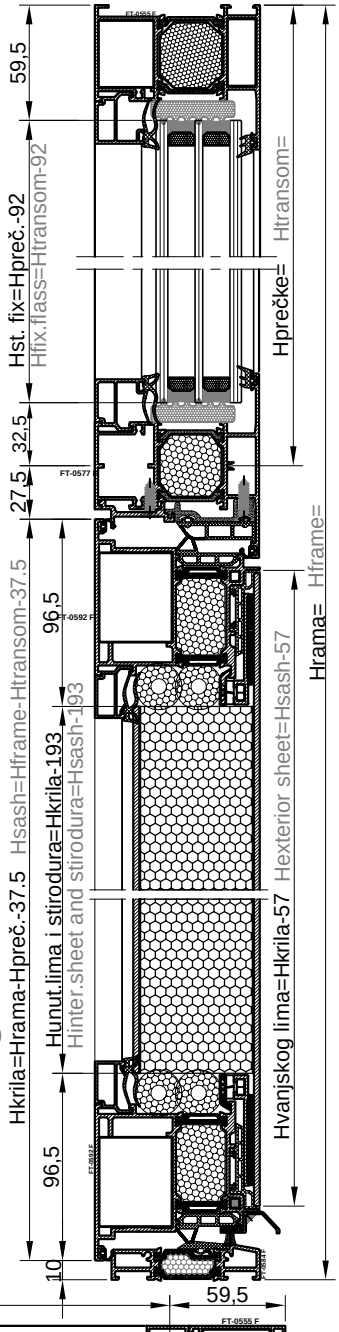
naziv name		mjera dimension	kom. pcs.	pilanje sawing angle
Ram FT-0555F	Frame FT-0555F	L	1	45-45
Ram FT-0555F	Frame FT-0555F	H	2	45-90
Krilo FT-0591F	Sash FT-0591F	(L/2)-57	4	45-45
Krilo FT-0591F	Sash FT-0591F	H-Hpreč.-37.5	4	45-45
Prag FT-0584F	Threshold FT-0584F	L-180	1	90-90
Prečka FT-0577F	Transom FT-0577F	L-89	1	90-90
Umetak FT-0571F	Flying mullion FT-0571F	Hkr-57	1	90-90
Al umetak F-1222	Additional profile F-1222	L-89	1	45-45
Al umetak F-1222	Additional profile F-1222	H-Hpreč.-17.5	1	45-90
Okapnica F-1200	Drip cap profile F-1200	Lkr-54	2	90-90
Al profil F-1093	Al profile F-1093	Lkr-76	4	45-45
Al profil F-1093	Al profile F-1093	Hkr-76	4	45-45
Staklo lajsna Z40-665	Glazing bead Z40-665	Lkr-141	4	90-90
Staklo lajsna Z40-665	Glazing bead Z40-665	Hkr-185	4	90-90
Staklo lajsna Z40-667	Glazing bead Z40-667	L-99	2	90-90
Staklo lajsna Z40-667	Glazing bead Z40-667	Hpreč.-116	2	90-90
Kutna spojnica 710.072	Corner bracket 710.072		2	
Kutna spojnica 710.173	Corner bracket 710.173		2	
Kutna spojnica 710.136	Corner bracket 710.136		8	
Kutna spojnica 710.015	Corner bracket 710.015		8	
Kutna spojnica 710.203	Corner bracket 710.203		8	
Kutna spojnica 730.001	Corner bracket 730.001		10	
Kopča 141.001	Panel clamp 141.001		(4Lkr+4Hkr)/250	
Centralna brtva rama 334.005	Central gasket-frame 334.005	2Lkr+3Hkr		
Centralna brtva krila 334.006	Central gasket-sash 334.006	4Lkr+3Hkr		
Brtva na spoju rama i krila 321.006	Rebate gasket 321.006	6Lkr+6Hkr+4L+4Hpreč.		
Brtva 344.004	Gasket 344.004	4(Lkr-53)+4(Hkr-53)		
Brtva prema panelu unut. 311.003	Panel gasket-internal 311.003	4Lkr+4Hkr		
Brtva praga 331.013	Threshold gasket 331.013	L-180	1	90-90
Vanjska brtva fix. 321.002	Glazing gasket-external 321.002	2L+2Hpreč		
Unutarnja brtva fix. 311.004	Glazing gasket-internal 311.004	2L+2Hpreč.		
Četkica 7x9 347.003	Brush seal 7x9 347.003	Lkr-35	2	90-90
Čep okapnice F-1200 373.027	End cap for F-1200 373.027		2 par	
Umetak na pragu 373.019	End cap for threshold 373.019		1 par	
Umetak na ramu 374.043	Additional pvc profile 374.043	L-88	1	45-45
Umetak na ramu 374.043	Additional pvc profile 374.043	H-Hpreč.-17	2	45-90
Brava G-U Secury s MR2 (35) tri ključanja 122.016	Multipoint lock - G-U Secury MR2 (35) -122.016		1	
Brava G-U za pom. krilo (lijeva) 122.025	Lever-operated gear for passive leaf G-U (left) 122.025		1	
Gornji element za nastavljanje 122.026	Top shoot bolt unit 122.026		1	
Donji element za nastavljanje 122.027	Bottom shoot bolt unit 122.027		1	
Gornja prihvatna pločica 122.028	Top striking plate 122.028		1	
Donja prihvatna pločica 122.080	Bottom striking plate 122.080		1	
Trodijelna cilindrična šarka 112.011.01 - bijela	Barrel door hinge-3 part 112.011.01 - white	2 ili (3) po krilu ovisno o visini i tež.krila 2 or (3) per sash(dep. of height and weight of sash)		
Ručka za vrata 102.028	Door handle 102.028		2	
Četvrtka 102.025	Square spindle 102.025		1	
Cilindar (35-75) 122.095	Cylinder (35-75) 122.095		1	
Štitnik cilindra 122.098	Cylinder rosettte 122.098		2	
Protuprovalni umetak 141.002	Security pin 141.002		4	
Izolacijski umetak Ø25 340.035	Underpanel insulator Ø25 340.035		8(Lkr-173)+8(Hkr-131)	

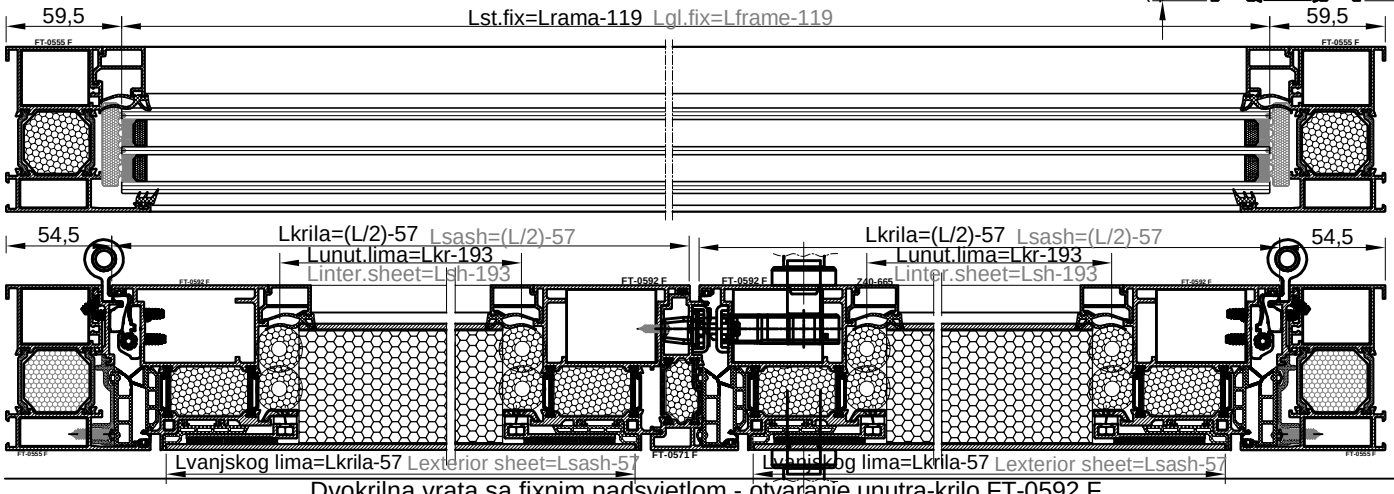


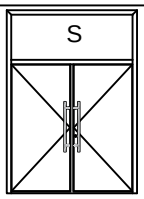


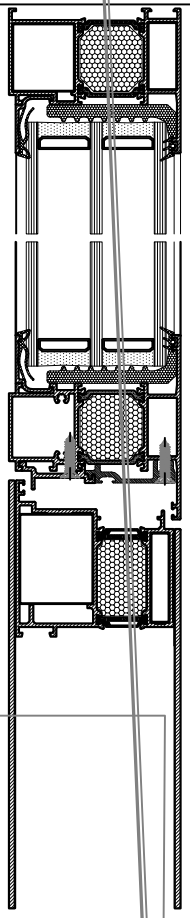
naziv name		mjera dimension	kom. pcs.	pilanje sawing angle
Ram FT-0555F	Frame FT-0555F	L	1	45-45
Ram FT-0555F	Frame FT-0555F	H	2	45-90
Krilo FT-0592F	Sash FT-0592F	(L/2)-57	4	45-45
Krilo FT-0592F	Sash FT-0592F	H-Hpreč.-37.5	4	45-45
Prag FT-0584F	Threshold FT-0584F	L-180	1	90-90
Prečka FT-0577F	Transom FT-0577F	L-89	1	90-90
Umetak FT-0571F	Flying mullion FT-0571F	Hkr-57	1	90-90
Al umetak F-1222	Al umetak F-1222	L-89	1	45-45
Al umetak F-1222	Al umetak F-1222	H-Hpreč.-17.5	2	45-90
Okapnica F-1200	Drip cap profile F-1200	Lkr-54	2	90-90
Al profil F-1205	Al profile F-1205	Lkr-76	4	45-45
Al profil F-1205	Al profile F-1205	Hkr-76	4	45-45
Staklo lajsna Z40-665	Glazing bead Z40-665	Lkr-161	4	90-90
Staklo lajsna Z40-665	Glazing bead Z40-665	Hkr-205	4	90-90
Staklo lajsna Z40-667	Glazing bead Z40-667	L-99	2	90-90
Staklo lajsna Z40-667	Glazing bead Z40-667	Hpreč.-116	2	90-90
Kutna spojnica 710.072	Corner bracket 710.072		2	
Kutna spojnica 710.173	Corner bracket 710.173		2	
Kutna spojnica 710.136	Corner bracket 710.136		8	
Kutna spojnica 710.015	Corner bracket 710.015		8	
Kutna spojnica 710.203	Corner bracket 710.203		8	
Kutna spojnica 730.001	Corner bracket 730.001		10	
Kopča 141.001	Panel clamp 141.001		(4Lkr+4Hkr)/250	
Centralna brtva rama 334.005	Central gasket-frame 334.005	2Lkr+2Hkr		
Centralna brtva krila 334.006	Central gasket-sash 334.006	4Lkr+3Hkr		
Brtva na spoju rama i krila 321.006	Rebate gasket 321.006	6Lkr+6Hkr+4L+4Hpreč.		
Brtva 344.004	Gasket 344.004	4(Lkr-53)+4(Hkr-53)		
Brtva prema panelu unut. 311.003	Panel gasket -int.311.003	4Lkr+4Hkr		
Brtva praga 331.013	Threshold gasket 331.013	L-180	1	90-90
Vanjska brtva fix. 321.002	Glazing gasket-external 321.002	2L+2Hpreč.		
Unutarnja brtva fix. 311.004	Glazin gasket-internal 311.004	2L+2Hpreč.		
Četkica 7x9 347.003	Brush seal 7x9 347.003	Lkr-35	2	90-90
Čep okapnice F-1200 373.027	End cap for F-1200 373.027		1 par	
Umetak na pragu 373.019	End cap for threshold 373.019		1 par	
Umetak na ramu 374.043	Add. pvc profile 374.043	L-88	1	45-45
Umetak na ramu 374.043	Add. pvc profile 374.043	H-Hpreč.-17	2	45-90
Brava G-U Secury s MR2 (45) tri ključanja 122.015	Multipoint lock - G-U Secury MR2 (45) -122.015		1	
Brava G-U za pom. krilo (lijeva) 122.025	Lever-operated gear for passive leaf G-U (left) 122.025		1	
Gornji element za nastavljanje 122.026	Top shoot bolt unit 122.026		1	
Donji element za nastavljanje 122.027	Bottom shoot bolt unit 122.027		1	
Gornja prihvatna pločica 122.028	Top striking plate 122.028		1	
Donja prihvatna pločica 122.080	Bottom striking plate 122.080		1	
Trodijelna cilindrična šarka 112.011.01 - bijela	Barrel door hinge-3 part 112.011.01 - white	2 ili (3) po krilu ovisno o visini i tež.krila 2 or (3) per sash(dep. of height and weight of sash)		
Ručka za vrata 102.028	Door handle 102.028		2	
Četvrtka 102.025	Square spindle 102.025		1	
Cilindar (35-75) 122.095	Cylinder (35-75) 122.095		1	
Štitnik cilindra 122.098	Cylinder rosettte 122.098		2	
Protuprovalni umetak 141.002	Security pin 141.002		4	
Izolacijski umetak Ø25 340.035	Underpanel insulator Ø25 340.035		8(Lkr-193)+8(Hkr-151)	



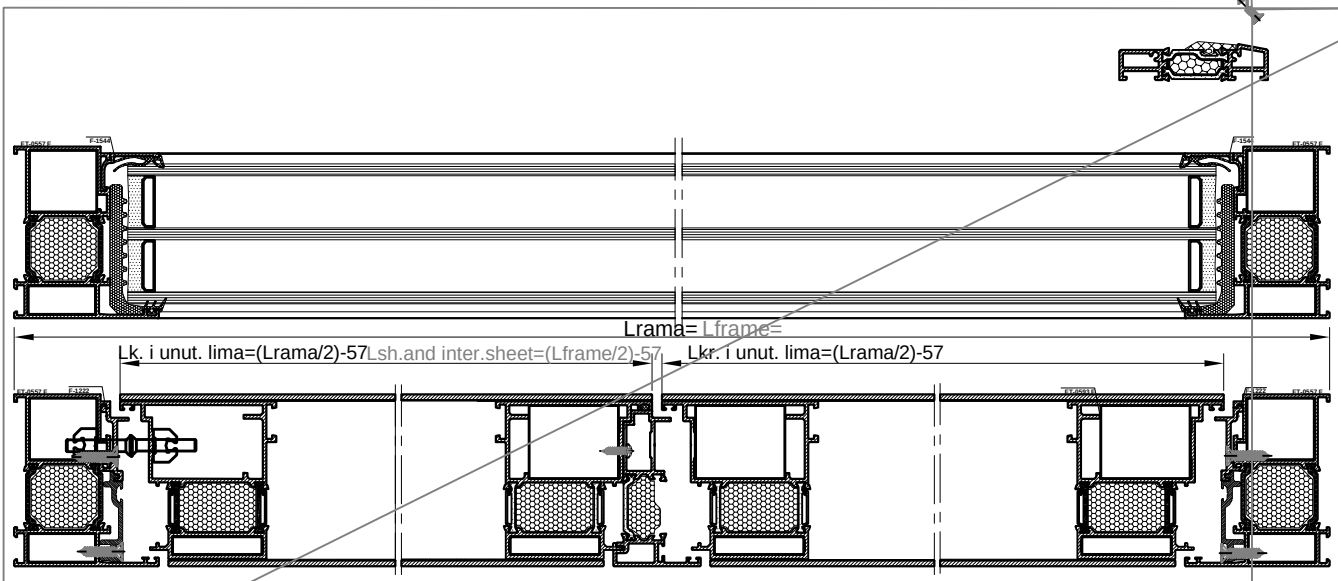








Ram FT-0557F	Frame FT-0557F	L	1	45-45
Ram FT-0557F	Frame FT-0557F	H	2	45-90
Krilo FT-0593F	Sash FT-0593F	(L/2)-57	4	45-45
Krilo FT-0593F	Sash FT-0593F	H-Hpreč-37.5	4	45-45
Prag FT-0584F	Threshold FT-0584F	L-180	1	90-90
Prečka FT-0580F	Transom FT-0580F	L-89	1	90-90
Umetak FT-0571F	Flying mullion FT-0571F	Hkr-57	1	90-90
Okapnica F-1200	Drip cap profile F-1200	Lkr-54	2	90-90
Al profil F-1222	Al profile F-1222	L-89	1	90-90
Al profil F-1222	Al profile F-1222	H-(Hpr.+17.5)	2	90-90
Staklo lajsna F-1544	Glazing bead F-1544	L-99	2	90-90
Staklo lajsna F-1544	Glazing bead F-1544	Hpreč.-122	2	90-90
Kutna spojnica 710.126	Corner bracket 710.126		2	
Kutna spojnica 710.173	Corner bracket 710.173		2	
Kutna spojnica 710.136	Corner bracket 710.136		8	
Kutna spojnica 710.169	Corner bracket 710.169		8	
Kutna spojnica 730.001	Corner bracket 730.001		10	
Centralna brtva rama 334.005		1L+2H		
Centralna brtva krila 334.006		4Lkr+3Hkr		
Brtva na spoju rama i krila 321.006		3Lkr+6Hkr		
Brtva praga 331.013		L-180	1	90-90
Vanjska brtva fix. 321.002				
Unutarnja brtva fix. 311.003				
Četkica 7x9 347.003		Lkr-35	2	90-90
Čep okapnice F-1200 373.027			1 par	
Umetak na pragu 373.019			1 par	



FEAL

Skenirajte QR kod i registrirajte se na partner.feal.ba

Scan the QR code and register on partner.feal.ba

TERMO **85 VS** I **VP**

Knjiga B / *Book B*

Lipanj 2024. / June 2024

FEAL d.o.o.
Trnska cesta 146
88220 Široki Brijeg
Bosna i Hercegovina
Tel. +387 39 704-269; 705-807; 705-636
Fax. +387 39 704-358
info@feal.ba
www.feal.ba